BV1910876

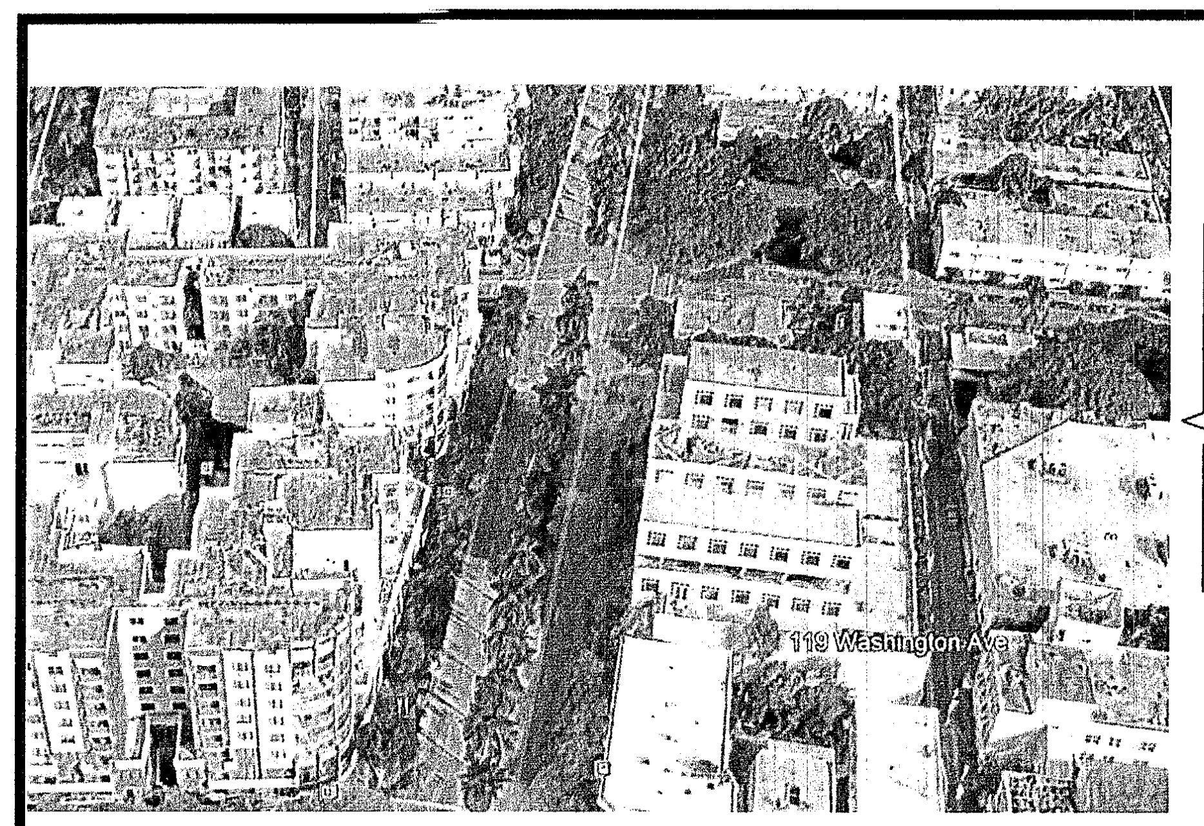

SITE LOCATION

SCALE: N.T.S.

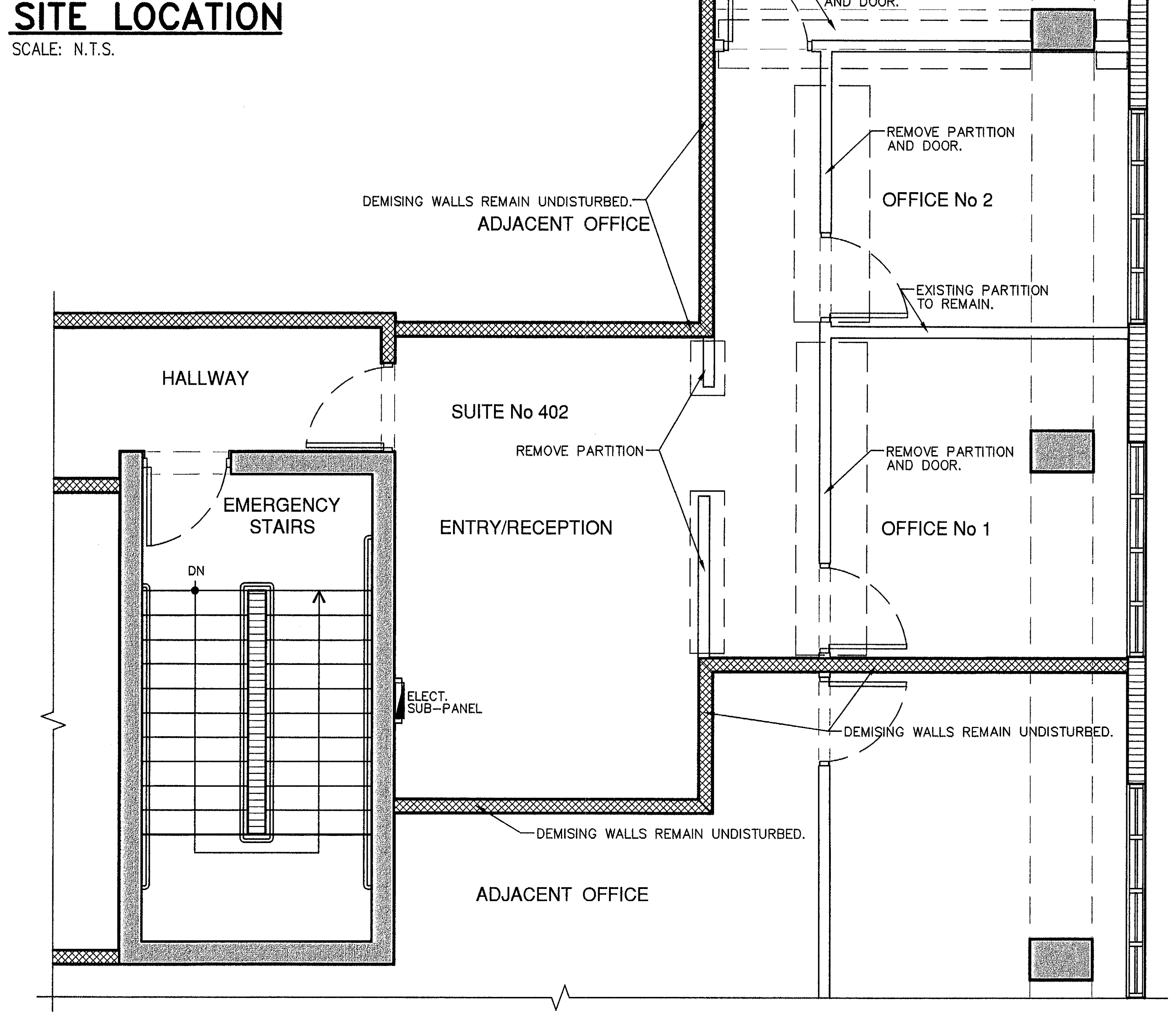
TERRACE AREA
TERRACE AREA REMAIN AS EXISTING.
EXISTING DOOR TO REMAIN.
OFFICE No 3
REMOVE PARTITION AND DOOR.
REMOVE PARTITION AND DOOR.
OFFICE No 2
DEMISING WALLS REMAIN UNDISTURBED.
ADJACENT OFFICE
EXISTING PARTITION TO REMAIN.
HALLWAY
SUITE No 402
REMOVE PARTITION
REMOVE PARTITION AND DOOR.
EMERGENCY STAIRS
ENTRY/RECEPTION
OFFICE No 1
DN
ELECT. SUB-PANEL
DEMISING WALLS REMAIN UNDISTURBED.
DEMISING WALLS REMAIN UNDISTURBED.
ADJACENT OFFICE

YUKON OFFICES BUILDING SUITE 402
EXISTING FLOOR PLAN & DEMOLITION

SCALE: 1/4"= 1'-0"

LEGEND:

- ▢ EXISTING CONC. COLUMNS.
- ▬ EXISTING CONC. WALLS.
- ▤ EXISTING CONC. BLOCK WALLS.
- ═ EXISTING PARTITIONS.
- ▩ EXISTING FIRE RATED PARTITIONS.
- ┅ EXISTING PARTITIONS TO BE REMOVED.
- ▨ PROPOSED NEW PARTITIONS.

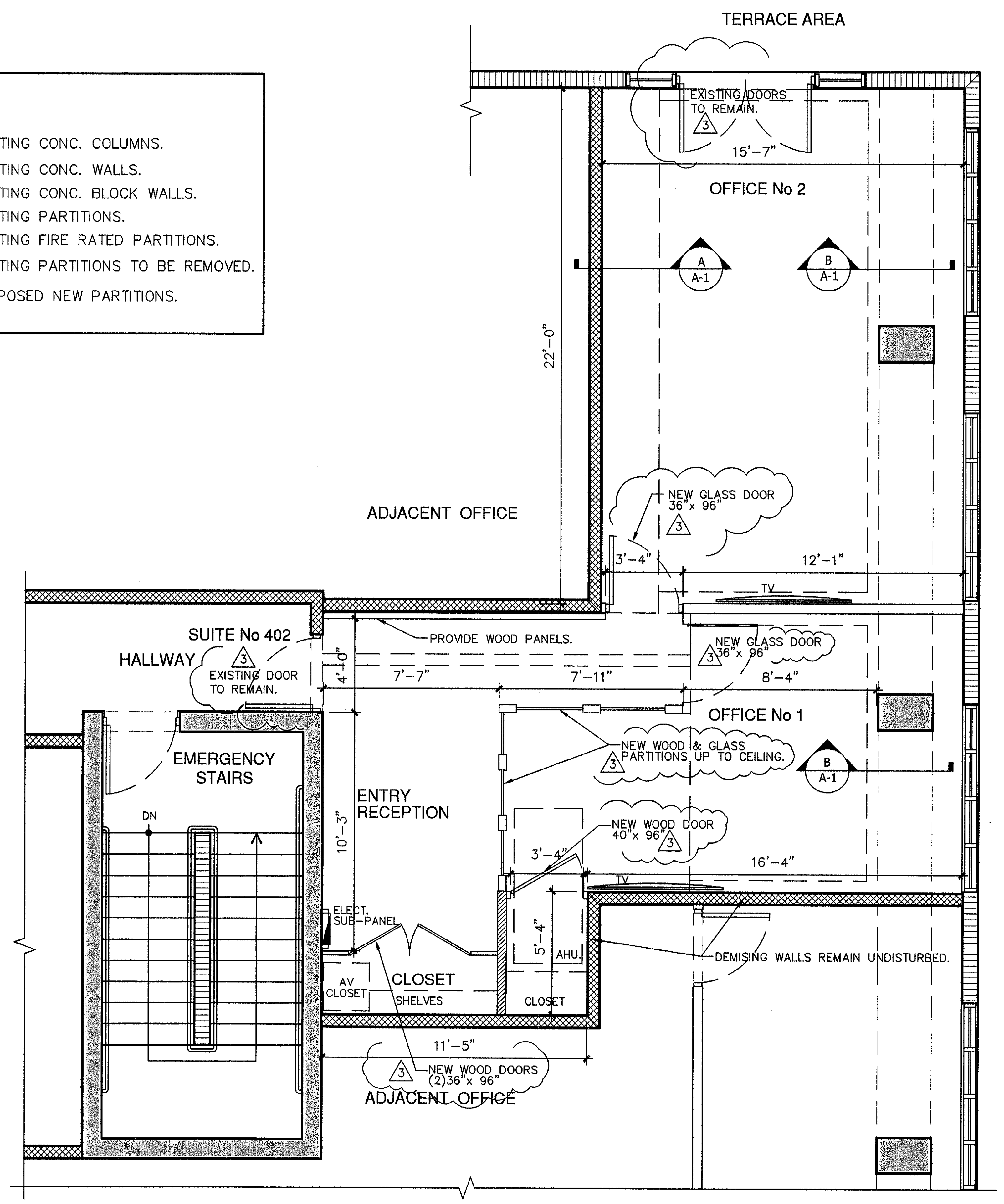
TERRACE AREA
EXISTING DOORS TO REMAIN.
15'-7"
OFFICE No 2
A A-1
B A-1
22'-0"
ADJACENT OFFICE
NEW GLASS DOOR 36"x 96"
3
3'-4"
12'-1"
TV
SUITE No 402
HALLWAY
EXISTING DOOR TO REMAIN.
PROVIDE WOOD PANELS.
NEW GLASS DOOR 36"x 96"
4'-0"
7'-7"
7'-11"
8'-4"
OFFICE No 1
EMERGENCY STAIRS
NEW WOOD & GLASS PARTITIONS UP TO CEILING.
B A-1
DN
ENTRY RECEPTION
10'-3"
NEW WOOD DOOR 40"x 96"
3'-4"
16'-4"
ELECT. SUB-PANEL
5'-4"
AHU
AV CLOSET
CLOSET
SHELVES
CLOSET
DEMISING WALLS REMAIN UNDISTURBED.
11'-5"
NEW WOOD DOORS (2)36"x 96"
ADJACENT OFFICE

YUKON OFFICES BUILDING SUITE 402
PROPOSED FLOOR PLAN

SCALE: 1/4"= 1'-0"

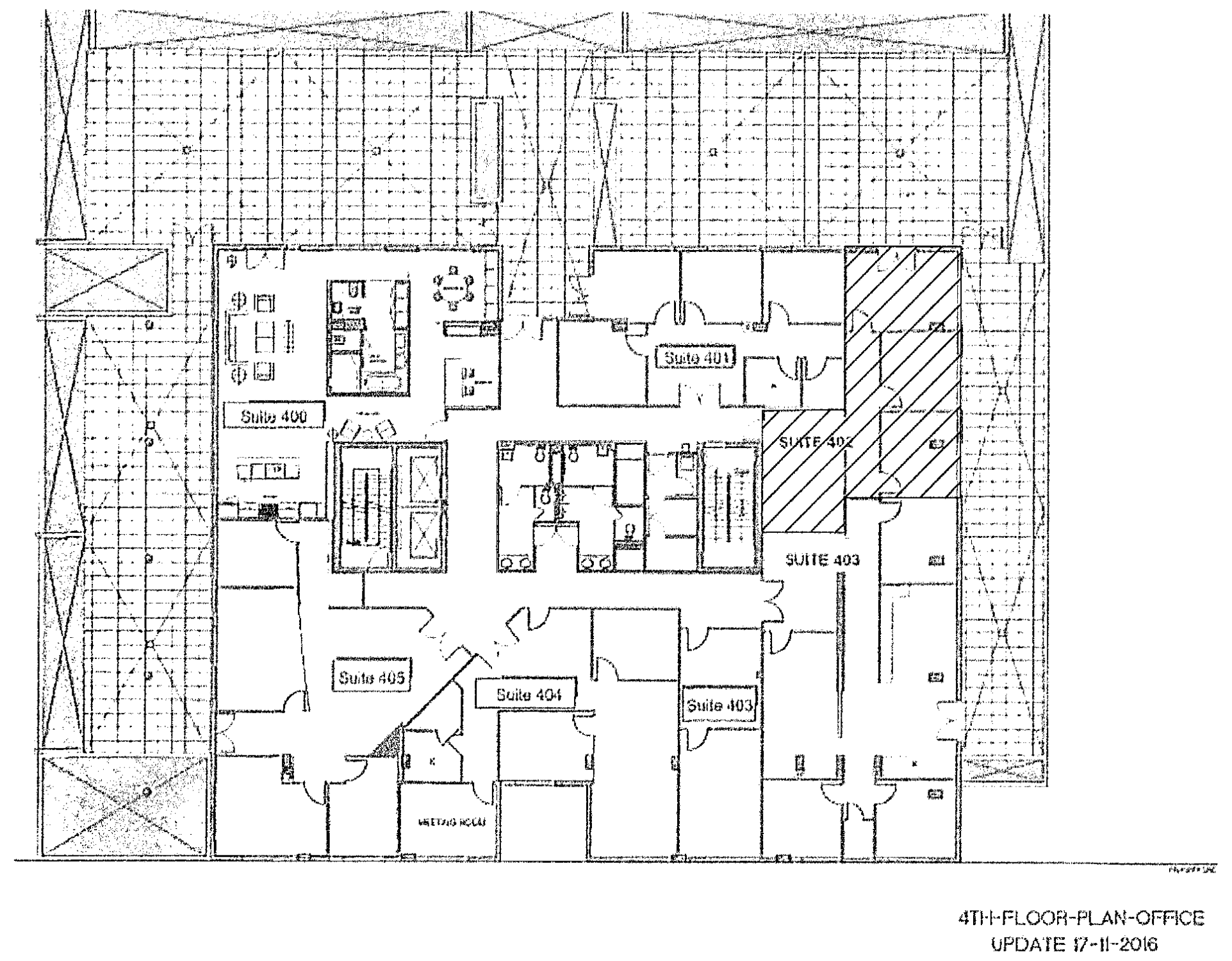
Suite 406
Suite 403
Suite 405
Suite 404
Suite 403
4TH-FLOOR-PLAN-OFFICE
UPDATE 17-II-2016

YUKON OFFICE BUILDING
KEY PLAN SUITE 402

SCALE: N.T.S.

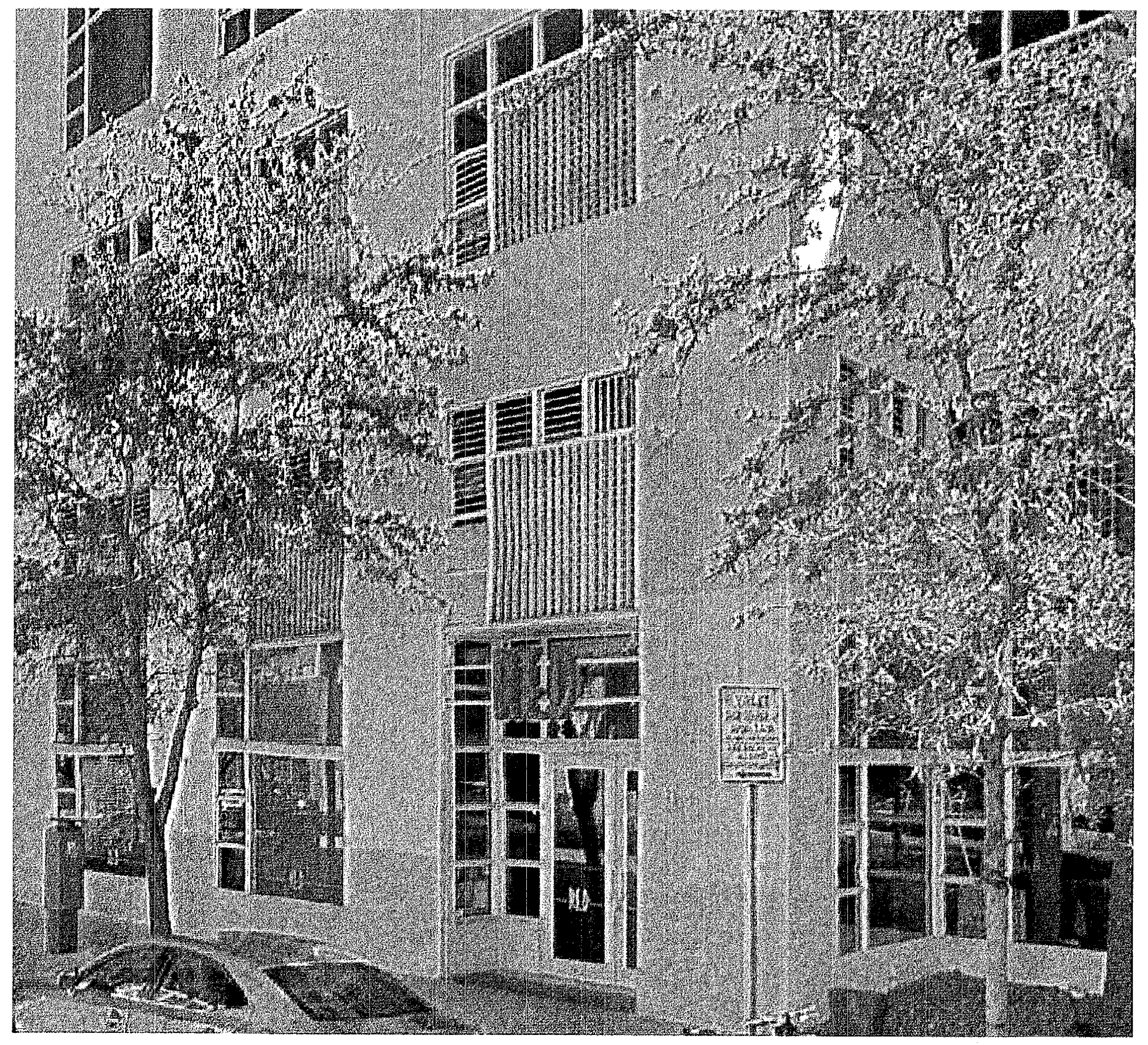

EXISTING FRONT ELEV. TO REMAIN

SCALE: N.T.S.

EXISTING JG&C CORPORATION OFFICES.
EXISTING OFFICES DO NOT CHANGE OF USE.
-REMODELING EXISTING OFFICE LAYOUT AS PER PLAN.

DEMOLITION NOTES:

1.- ALL DEMOLITION WORK TO COMPLY WITH THE REQUIREMENT OF THE FLORIDA BUILDING CODE AND ALL APPLICABLE CODES AND REGULATIONS. PRIOR TO COMMENCING THE DEMOLITION WORK, THE GENERAL CONTRACTOR IS TO CAREFULLY EXAMINE AND BE COMPLETELY FAMILIARIZED WITH THE EXISTING STRUCTURE.

2.- ALL SALVAGEABLE MATERIALS AND EQUIPMENT SHALL BE CAREFULLY REMOVED AND STORED AND WILL REMAIN IN THE PROPERTY OF THE OWNER UNLESS OTHERWISE SPECIFIED.

3.- CAREFULLY REMOVE TOTALLY OR PARTIALLY INDICATED WALLS/PARTITIONS, FILL OR CUT AND GRIND ANY UNEVEN, LOW OR HIGH FLOOR AREAS TO MAKE ENTIRE FINISH FLOOR FLUSH AND UNIFORM, AS PER DESIGN.

4.- WHERE WALLS/PARTITIONS ARE TO BE REMOVED FINISH DAMAGED SURFACES (CEILING AND WALLS) TO MATCH.

5.- BEFORE PAINTING EXISTING SURFACES, INSPECT THE ENTIRE AREA INVOLVED, PROPERLY PREPARE SURFACES TO RECEIVE PAINT AND PATCH TO MATCH ADJACENT SURFACES WHERE NECESSARY.

NOTES:

1.-THE SMOKE DETECTORS SYSTEM IS EXISTING AND REMAIN THE SAME. ALSO INCLUDED SOME DEVICES RELOCATIONS AS PER PLANS.

2.-THE FIRE ALARM SOUND SYSTEM IS EXISTING AND REMAIN THE SAME. ALSO INCLUDED SOME DEVICES RELOCATIONS AS PER PLANS.

3.-THE AIR CONDITIONING SYSTEM IS EXISTING AND REMAIN THE SAME. ALSO INCLUDED SOME GRILLE-MODIFFICATIONS AS PER M-1.

NOTE:

AT RELOCATION OF ANY FIRE ELEMENT, ENGINEERING SHOP-DRAWINGS, SIGNED & SEALED, SHALL BE SUBMITTED FOR FIRE ALARM SOUND CONTRACTOR.

NOTE:

ALL LIFE SAFETY SYSTEMS SHALL REMAIN OPERATIONAL DURING THE DEMOLITIONS AND CONSTRUCTION PHASES.

NOTE:

ALL GLASS USED INSIDE THE SUITE SHALL BE TEMPERED SAFETY GLASS, CATEGORY II.

WORK AREA:

CARPET FLOOR = 743.9 SQ.FT.
DROP CEILING AREA = 743.9 SQ.FT.

TOTAL WORK AREA = 743.9 SQ.FT.

SCOPE OF WORK

INTERIOR REMODELING & RENOVATION LEVEL II
FLORIDA BUILDING CODE 2017 6th EDITION

-REMOVED AND DISPOSAL EXISTING CARPET AND REPLACED FOR A NEW CARPET SELECT BY OWNER, INCLUDING WOOD BASEBOARDS. THE SOUNDPROOFING ARE EXISTING AND REMAIN THE SAME.
-BUILT WOOD-GLASS PARTITIONS WITH SWING DOOR AS PER DESIGN. GLASS PARTITIONS HAVE TO BE SAFETY, TEMPERED GLASS, CATEGORY II.
-BUILD A DRYWALL WITH METAL FRAME DROP CEILING THROUGHOUT FOR NEW LED LIGHTINGS AS PER SHEET E-1 AND DETAILS.
-PROVIDE STRIPPING LED LIGHTINGS AT CEILING EDGES AS PER PLANS.
-MODIFIED THE A/C SUPPLY GRILLES USING LINEAL TYPES AS PER M-1.
-REPATCH AND PAINTING THE ENTIRE CONDO-UNIT INCLUDING DOORS, CASINGS AND BASEBOARDS.

THERE ARE NOT ANY PLUMBING JOB

-THE BATHROOMS ARE EXISTING TO REMAIN OUTSIDE TO THE OFFICES.

NOTE:

THE INTERIOR REMODELING AND RENOVATIONS DO NOT INCLUDING ANY WORK ON COMMON AREAS OR EXIT DOORS OR CORRIDOR THAT'S WILL REMAINS UNDISTURBED AND HAS NOT ANY MODIFICATIONS.

THE DEMISING PARTITIONS THAT SEPARATE TWO SUITES CANNOT BE MODIFIED OR PENETRATED IN ANY WAY.

ALL NEW FINISHES (WALL/CEILING/FLOOR) OTHER THAN PAINT, TO COMPLY WITH FBC 803 AND FBC 804.

NOTE:

THE NEW CARPET PILE HEIGHT SHALL BE A 1/2" MAX., AS PER F.B.C. ACC. 302.2.

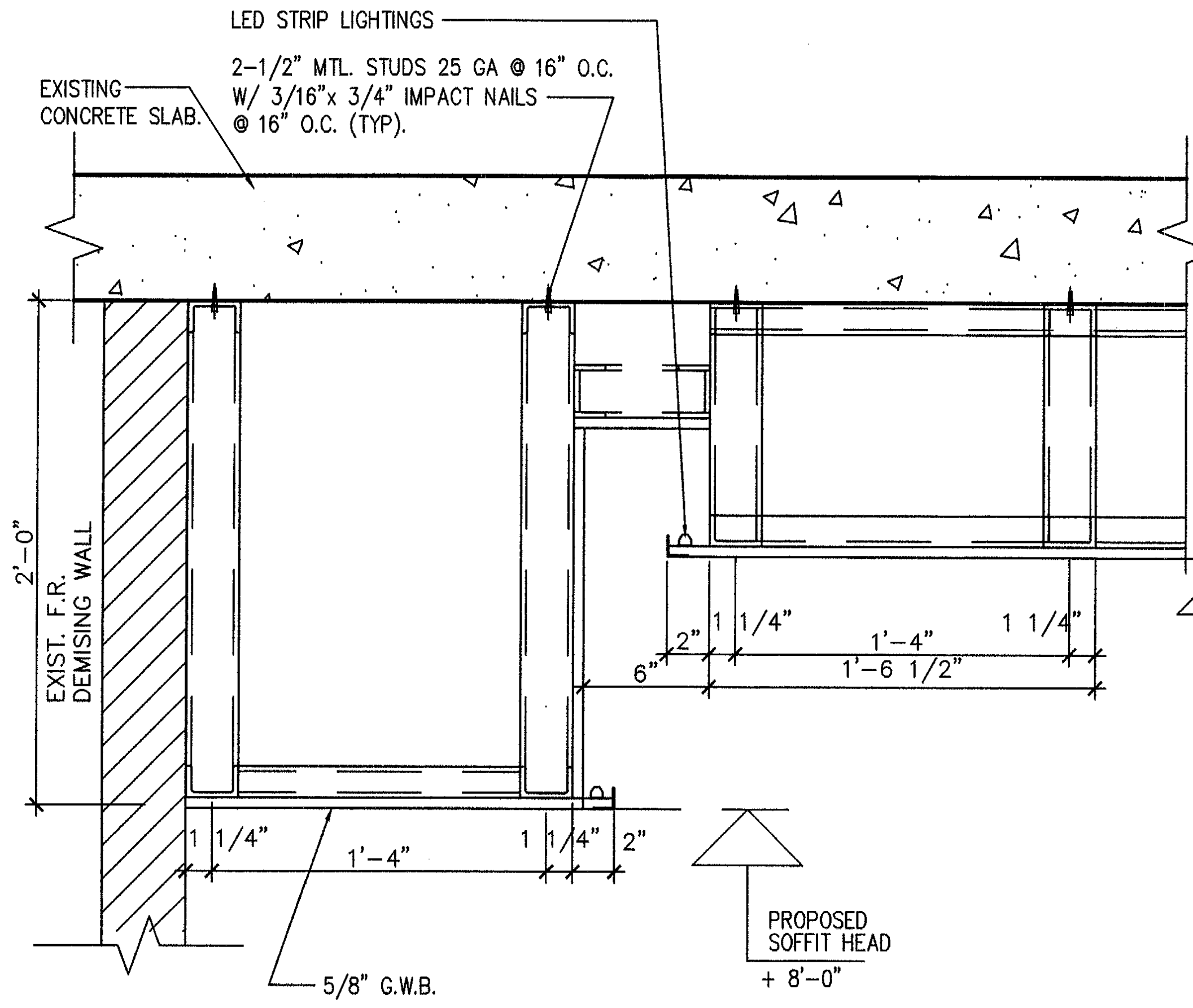
LED STRIP LIGHTINGS
EXISTING CONCRETE SLAB.
2-1/2" MTL. STUDS 25 GA @ 16" O.C.
W/ 3/16"x 3/4" IMPACT NAILS @ 16" O.C. (TYP.)
2'-0"
EXIST. F.R. DEMISING WALL
1 1/4"
1'-4"
1 1/4"
2"
PROPOSED SOFFIT HEAD + 8'-0"
5/8" G.W.B.
6"
2"
1 1/4"
1'-4"
1 1/4"
1'-6 1/2"

A/A-1 **DROP CEILING DETAIL**

1-1/2" = 1'-0"

City of Miami Beach
Fire Prevention Division
PLANS APPROVED

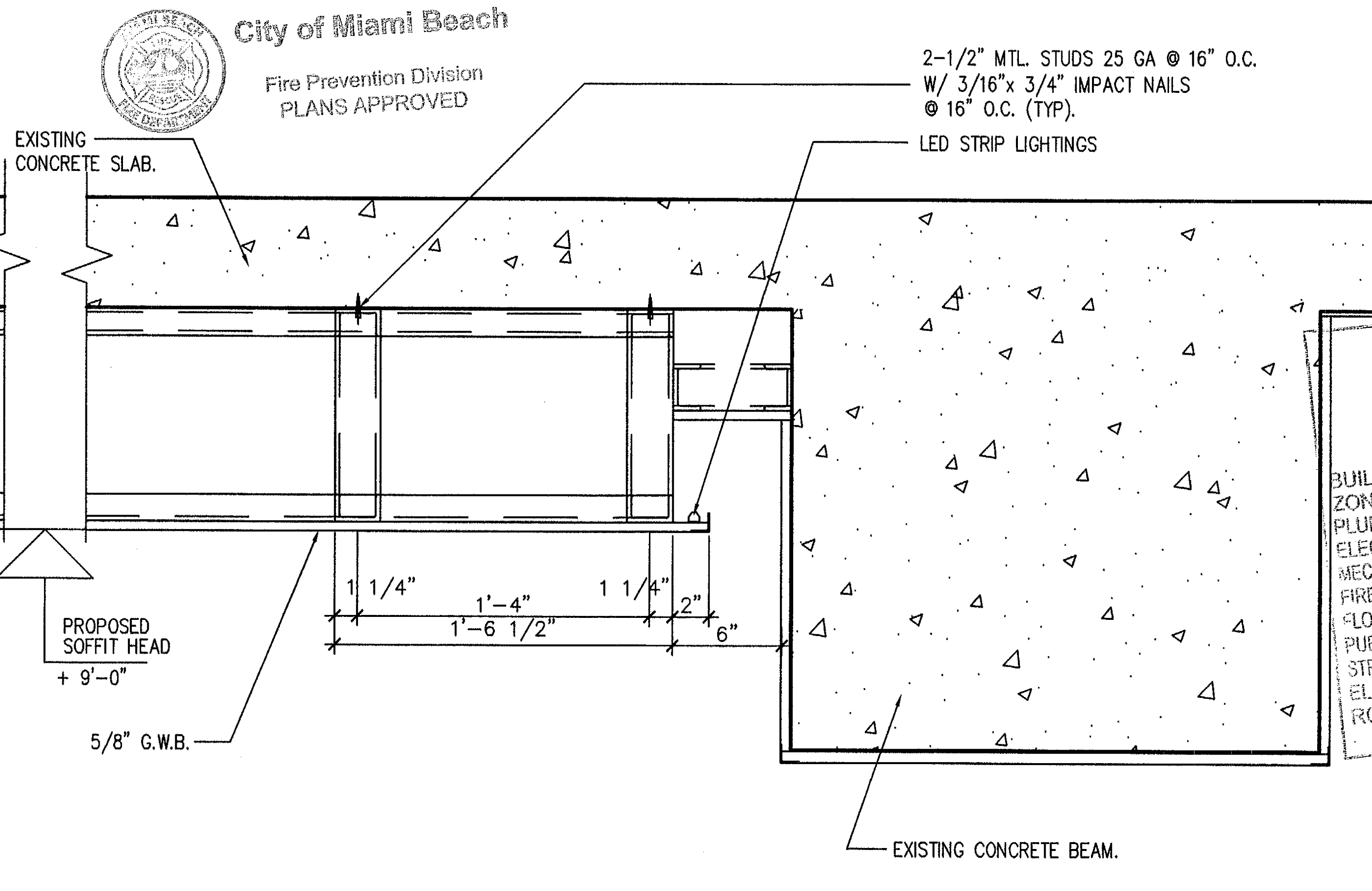
EXISTING CONCRETE SLAB.
2-1/2" MTL. STUDS 25 GA @ 16" O.C.
W/ 3/16"x 3/4" IMPACT NAILS @ 16" O.C. (TYP.)
LED STRIP LIGHTINGS
PROPOSED SOFFIT HEAD + 9'-0"
5/8" G.W.B.
1 1/4"
1'-4"
1 1/4"
2"
1'-6 1/2"
6"
EXISTING CONCRETE BEAM.

B/A-1 **DROP CEILING DETAIL AT EXISTING CONC. BEAM**

1-1/2" = 1'-0"

NOTICE: In addition to the requirement of this permit there may be additional restrictions applicable to this property that may be found in the Public Records of this County and there may be additional permits required from other government entities such as water management's districts, state agencies, or federal agencies.
The City of Miami Beach assumes no responsibility for accuracy of or results from these plans which are approved subject to compliance with all Federal, State, and Local Laws, Rules, and Regulations

OFFICE COPY
CITY OF MIAMI BEACH
APPROVED FOR PERMIT BY
THE FOLLOWING:
BUILDING: 9/18/19
ZONING:
PLUMBING: 9/18/19
ELECTRICAL: 9/16/19
MECHANICAL: 9/16/19
FIRE PREVENTION:
FLOOD: 9/18/19
PUBLIC WORKS:
STRUCTURAL:
ELEVATOR:
ROOFING:
WESTHAVEN CONSTRUCTION SERVICES INC.

Fine Line Engineers Inc.
Electrical, Mechanical, Plumbing
Fire Protection, Construction Administration
7600 W. 20TH AVE Suite #110 Hialeah, Fl. 33016
Voice: 786.953-4901 Fax: 786.953-4907
E-mail: cadinfo@flengineers.com
No. 32578
GEORGE FREUC P.E.
REGISTERED ENGINEER NO. 32578
STATE OF FLORIDA CA#: 29796
7/12/19
DATE
©ALL RIGHTS RESERVED Fine Line Engineering, Inc.

Fine Line Engineers Inc.
Electrical, Mechanical, Plumbing, Fire Protection
Construction Administration Services
7600 WEST 20TH AVE SUITE 110, HIALEAH, FLORIDA. 33016
Tel: 786-953-4901
E-mail: svazquez@flengineers.com

REVISION BLOCK

NO.	DATE	DESCRIPTION
1	06-28-19	BLDG. DEPT. COMMENTS.
2	09-05-19	AS-BUILD REVISION & OWNER REQUIREMENTS.
3	09-17-19	ELDG. DEPT. COMMENTS: DOORS DIMENSIONS.

SUBMITAL BLOCK

NO.	DATE	DESCRIPTION

INTERIOR REMODELING TO:
YUKON OFFICES BUILDING
YANTRA 119 LLC.
SUITE 402
119 Washington Avenue, Miami Beach, FL 33139

A-1

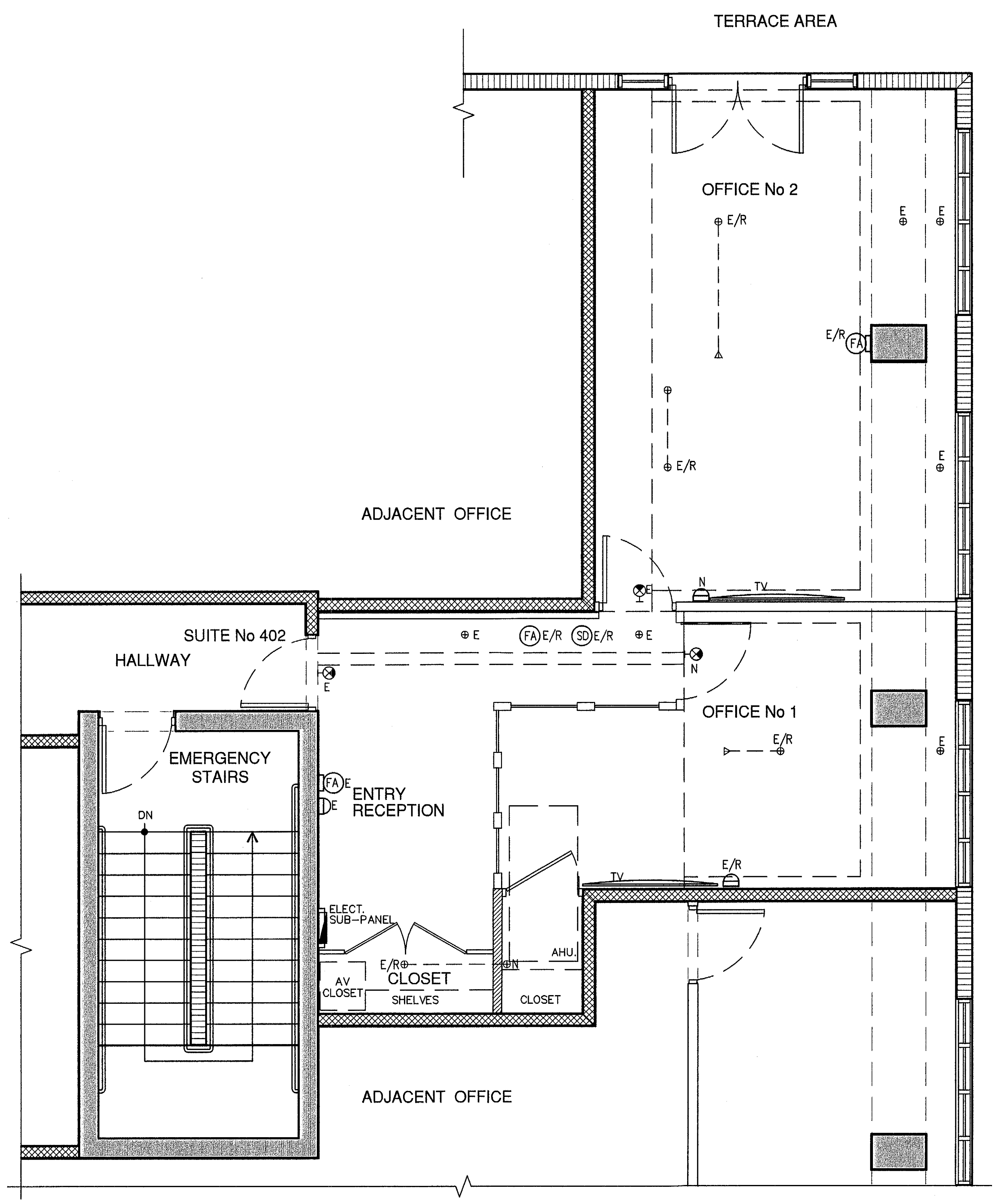
TERRACE AREA
OFFICE No 2
E/R
E
E/R
E/R
ADJACENT OFFICE
N
TV
SUITE No 402
HALLWAY
E
FA E/R
SD E/R
N
OFFICE No 1
E/R
EMERGENCY STAIRS
FA E
E
ENTRY RECEPTION
DN
ELECT. SUB-PANEL
E/R
CLOSET
AV CLOSET
SHELVES
N
AHU.
CLOSET
TV
E/R
ADJACENT OFFICE

YUKON OFFICES BUILDING SUITE 402
LIFE SAFETY PLAN

SCALE: 1/4"= 1'-0"

LEGEND

SD	SMOKE DETECTOR AT CEILING
SD	SMOKE DETECTOR AT WALLS
FA	FIRE ALARM (SOUND) AT CEILING
FA	FIRE ALARM (SOUND) AT WALLS
⊕	FIRE SPRINKLER HEAD CONCEALED
⊼	FIRE SPRINKLER HEAD AT WALL
E	DENOTE EXISTING TO REMAIN
E/R	DENOTE EXISTING TO BE RELOCATED
N	DENOTE NEW PROVIDED
⊗	EXIT SIGN
⊖	EMERGENCY LIGHTS W/BATTERY POWER
☒	AB TYPE FIRE EXTINGUISHER

NOTES:

1.-THE FIRE SPRINKLER SYSTEM IS EXISTING AND REMAIN THE SAME, BUT IT WILL HAVE SOME RELOCATIONS AS PER PLANS.
2.-THE SMOKE DETECTORS SYSTEM IS EXISTING AND REMAIN THE SAME, BUT IT WILL HAVE SOME RELOCATIONS AS PER PLANS.
3.-THE FIRE ALARM SYSTEM IS EXISTING AND REMAIN THE SAME, BUT IT WILL HAVE SOME RELOCATIONS AS PER PLANS.
4.-THE AIR CONDITIONING SYSTEM IS EXISTING AND REMAIN THE SAME, BUT IT WILL HAVE SOME GRILLE-MODIFFICATIONS AS PER PLANS.

ALL FIRE PROTECTION DEVICES ARE EXISTING AND REMAIN THE SAME.

NOTE:

AT RELOCATION OF ANY FIRE ELEMENT, ENGINEERING SHOP-DRAWINGS, SIGNED & SEALED, SHALL BE SUBMITTED FOR FIRE ALARM SOUND CONTRACTOR.

NOTE:

ALL SMOKE DETECTORS SHALL BE 120 V. W/ BATERY BACKUP, INTERCONNECTED AND LOCATED 36" MIN. AWAY FROM ANY A/C GRILLE OR REGISTER.

NOTE:

ALL LIFE SAFETY SYSTEMS SHALL REMAIN OPERATIONAL DURING THE CONSTRUCTION PHASES.

N.F.P.A. 101 "INTERIOR FINISH"

CLASSIFICATION INTERIOR WALL, CEILING FINISH
(3) CLASS "C"
a) FLAME SPREAD 76-200
b) SMOKE DEVELOPMENT 0-450

NOTE:

THE GENERAL CONTRACTOR SHALL COORDINATE WITH THE MANAGEMENT OFFICE AND ESTABLISH A FIRE WATCH AT ANY TIME THAT THE FIRE SPRINKLER SYSTEM SHOULD BE SHUT DOWN FOR MORE THAN 4 HOURS.

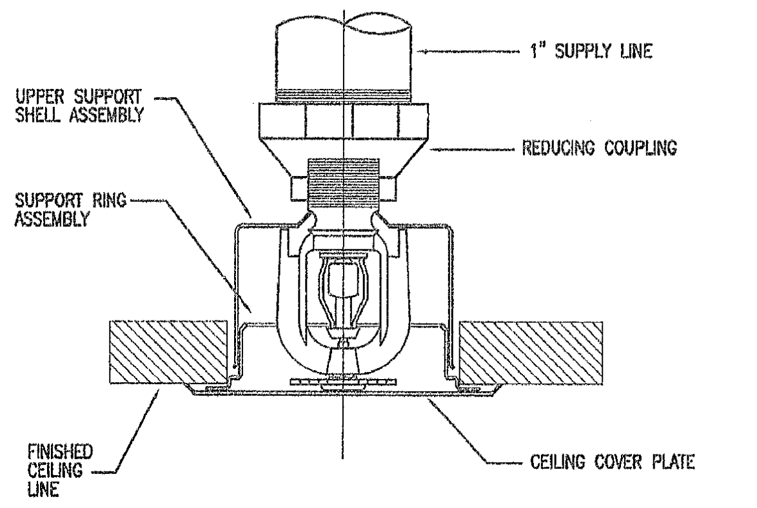
1" SUPPLY LINE
UPPER SUPPORT SHELL ASSEMBLY
REDUCING COUPLING
SUPPORT RING ASSEMBLY
FINISHED CEILING LINE
CEILING COVER PLATE

CONCEALED TYPE SPRINKLER HEAD MOUNTING DETAIL
N.T.S.

SPRINKLER HEAD SCHEDULE

AREA SERVED	MFR. & MODEL NO.	ORIFICE K-FACTOR	CONFIGURATION	TEMP. RATING	FINISH	DESIGN INFO.
APARTMENT SPRINKLERS	VIKING FREEDOM RESIDENTIAL VK 468	1/2" K= 5.2	RECESSED PENDENT	ORDINARY	WHITE POLYESTER COATING	----

NOTES:

1. ALL SPRINKLERS TO BE U.L. LISTED QUICK RESPONSE.
2. WHITE POLYESTER SPRINKLER FINISH TO BE U.L. LISTED CORROSION RESISTANT.
3. NEW SPRINKLERS SHALL BE OF SAME TEMP RATING AND K-FACTOR AS EXISTING. CONTRACTOR SHALL VERIFY EXISTING SPRINKLER TYPE BEFORE ORDERING NEW HEADS

9-17-19 9-18-19
9/17/19 9/17/19 9/18/19
9/17/19 9/18/19

APPROVED
MIAMI BEACH
FIRE DEPARTMENT

WESTHAVEN CONSTRUCTION
SERVICES INC.

Fine Line Engineers Inc.
Electrical, Mechanical, Plumbing
Fire Protection, Construction Administration
7600 W. 20TH AVE Suite #110, Hialeah, Fl. 33016
Voice: 786-953-4901 Fax: 786-953-4907

GEORGE FREIJO
LICENSE
No. 32578

GEORGE FREIJO, P.E.
REGISTERED ENGINEER NO. 32578
STATE OF FLORIDA CA#: 29796
DATE

©ALL RIGHTS RESERVED Fine Line Engineering, Inc.

Fine Line Engineers Inc.
Electrical, Mechanical, Plumbing, Fire Protection
Construction Administration Services
7600 WEST 20TH AVE SUITE 110, HIALEAH, FLORIDA, 33016
Tel: 786-953-4901
E-mail: svazquez@flengineers.com

REVISION BLOCK

NO.	DATE	DESCRIPTION
1	09-05-19	AS-BUILD REVISION & OWNER REQUIREMENTS.

SUBMITAL BLOCK

NO.	DATE	DESCRIPTION

INTERIOR REMODELING TO:
YUKON OFFICES BUILDING
YANTRA 119 LLC.
SUITE 402
119 Washington Avenue, Miami Beach, FL 33139

LS-1R

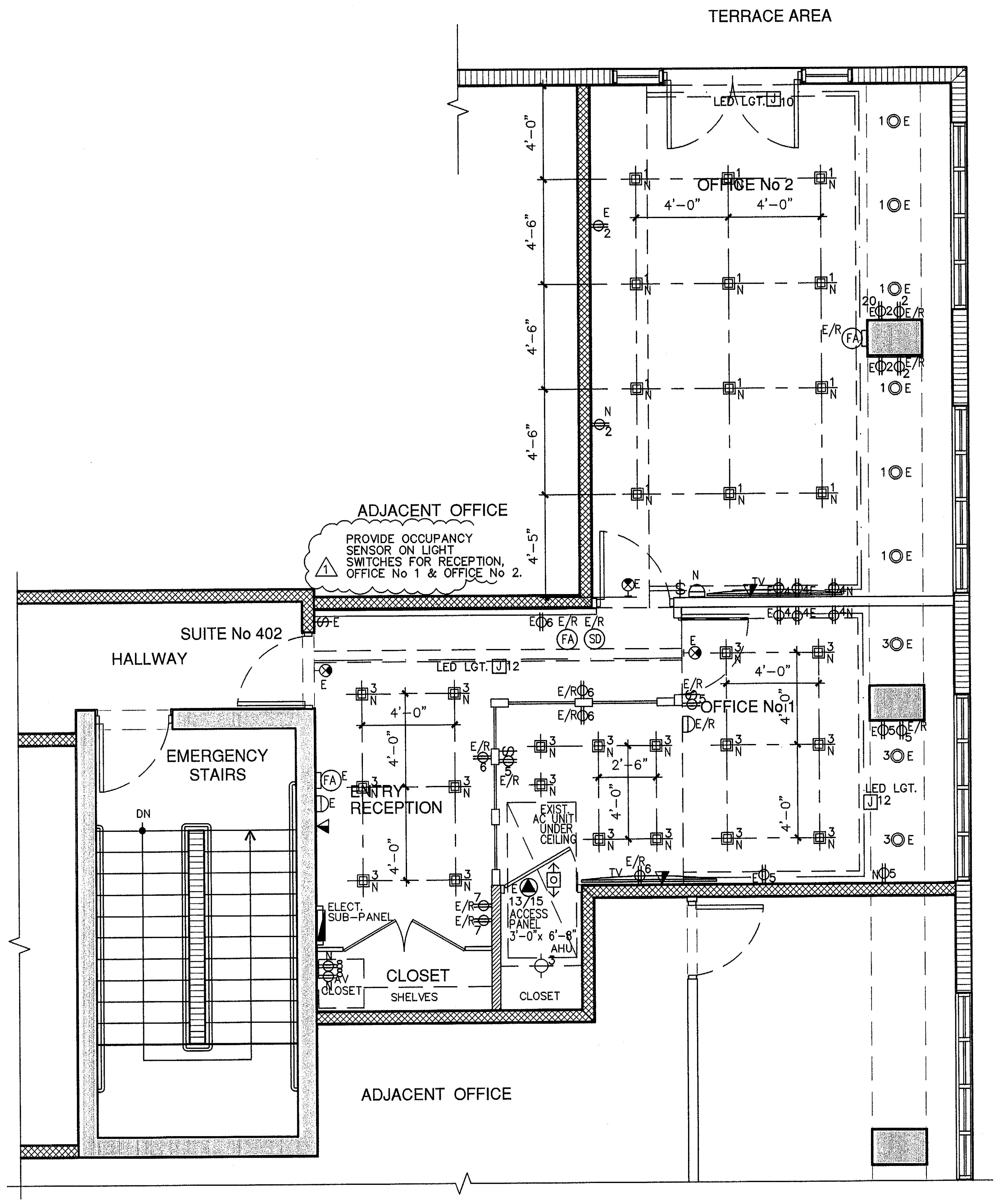

YUKON OFFICES BUILDING SUITE 402
ELECTRICAL PLAN

SCALE: 1/4"= 1'-0"

LEGEND

⊖	ELECTRICAL DBL. OUTLET
⊡	ELECTRICAL FLOOR OUTLET
$	1-WAY SWITCH
◩	ELECTRICAL PANEL
⊖	EMERGENCY LIGHTS W/BATTERY POWER
⌖	LIGHT RECEPTACLES
(SD)	SMOKE DETECTOR AT CEILING
(SD)	SMOKE DETECTOR AT WALLS
(FA)	FIRE ALARM (SOUND) AT CEILING
(FA)	FIRE ALARM (SOUND) AT WALLS
J	JUNCTION BOX
▣	RECESS LIGHT SQUARE
◎	RECESS LIGHT ROUND
K	KEY PAD
⊗	EXIT SIGN
◀	DATA-CABLE
TV	TV SET
⟨o⟩	MOTION SENSOR SWITCH

E DENOTE EXISTING TO REMAIN
E/R DENOTE EXISTING TO BE RELOCATED
N DENOTE NEW

NOTES:

1.-NOT ANY APPLIANCE LOAD HAS BEEN ADDED.

2.-ALL SMOKE DETECTORS SHALL BE 120 V. W/ BATERY BACKUP, INTERCONNECTED AND LOCATED 36" MIN. AWAY FROM ANY A/C GRILLE OR REGISTER.

NOTE:

IF HAVE TO RELOCATED ANY ELECTRIC FIRE ALARM SOUND, THE SHOP-DRAWINGS FOR IT WILL BE PROVIDED.

EXISTING SUB-PANEL

MODEL: SIEMENS LOAD CENTER EXIST. MAIN FEEDER = 60 AMP.
SERVICE: 1ø 3W-120/240V
MOUNTING: RECESSED
MAIN FEEDER: 3# 6 THWN CU, 1# 10 THWN(G) IN 1"ø COND.

MAIN BUS: 60 AMP.
NEUTRAL: 60 AMP.
MAINS: 60 A MCB
A.I.C.: 10,000

CKT.	DESCRIPTION	LOAD	Bk.	P	WIRE	COND.	CKT.	DESCRIPTION	LOAD	Bk.	P	WIRE	COND.
1	*LIGHTINGS*	1.0	20	1	12	1/2"	2	*RECEPTACLES*	1.0	20	1	12	1/2"
3	*LIGHTINGS (SD)*	1.0	20	1	12	1/2"	4	*RECEPTACLES*	1.0	20	1	12	1/2"
5	*OUTLETS*	1.0	20	1	12	1/2"	6	*RECEPTACLES*	1.0	20	1	12	1/2"
7	*OUTLETS*	1.0	20	1	12	1/2"	8	*RECEPTACLES*	1.0	20	1	12	1/2"
9	*OUTLETS*	1.0	20	1	12	1/2"	10	*RECEPTACLES*	1.0	20	1	12	1/2"
11	*OUTLETS*	1.0	20	1	12	1/2"	12	*RECEPTACLES*	1.0	20	1	12	1/2"
13	*A/C*	5.4	40	2	8	3/4"	14	*PHONE DISPLAY*	1.0	20	1	12	1/2"
15							16	*RECEPTACLES*	1.0	20	1	12	1/2"
17	*SPARE*						18	*SPARE*					
19	*SPARE*						20	*SPARE*					
21	*SPARE*						22	*SPARE*					
23	*SPARE*						24	*SPARE*					
25	*SPARE*						26	*SPARE*					
27	*SPARE*						28	*SPARE*					
29	*SPARE*						30	*SPARE*					

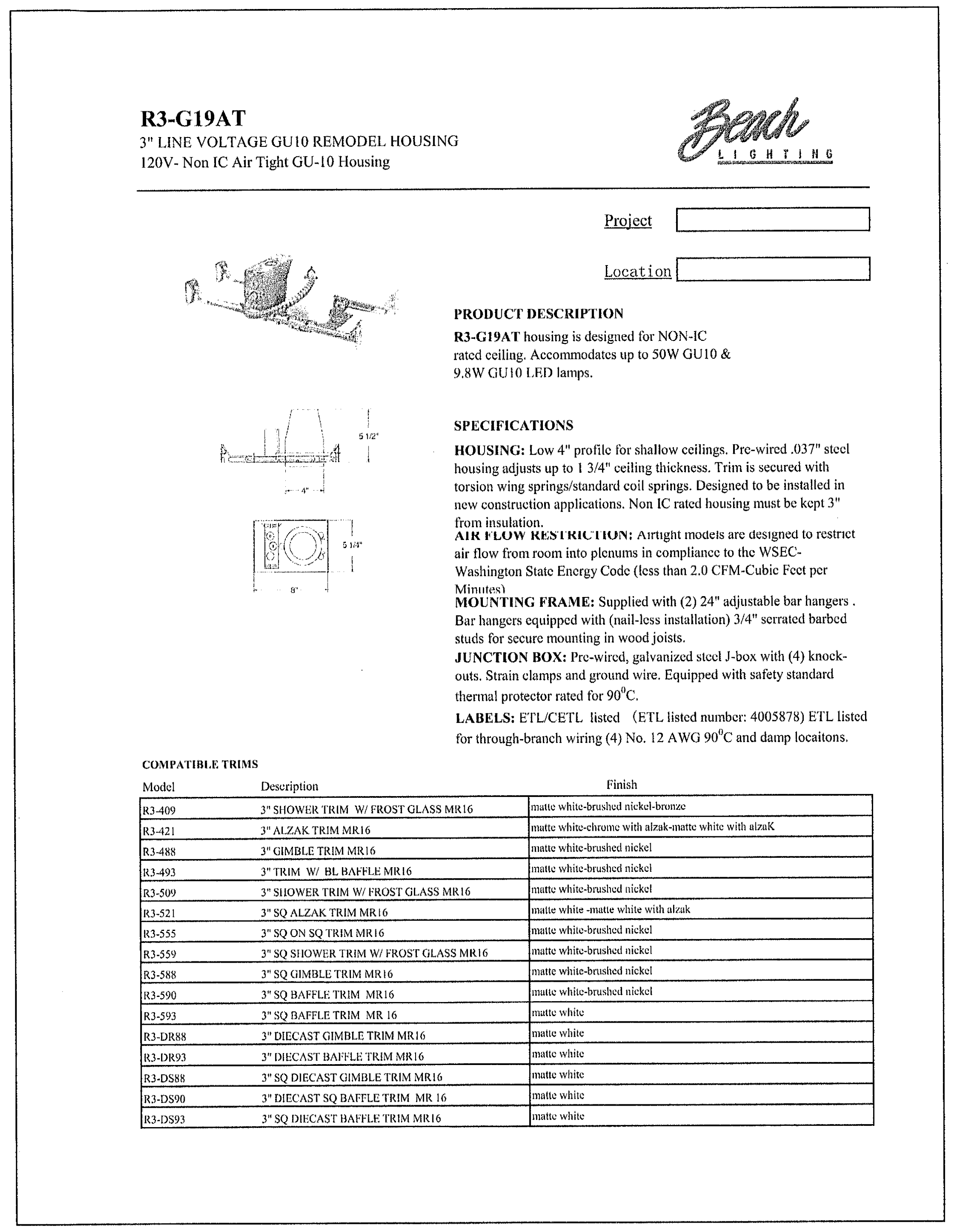

R3-G19AT
3" LINE VOLTAGE GU10 REMODEL HOUSING
120V- Non IC Air Tight GU-10 Housing

Beach
LIGHTING

Project ☐

Location ☐

PRODUCT DESCRIPTION

R3-G19AT housing is designed for NON-IC rated ceiling. Accommodates up to 50W GU10 & 9.8W GU10 LED lamps.

SPECIFICATIONS

HOUSING: Low 4" profile for shallow ceilings. Pre-wired .037" steel housing adjusts up to 1 3/4" ceiling thickness. Trim is secured with torsion wing springs/standard coil springs. Designed to be installed in new construction applications. Non IC rated housing must be kept 3" from insulation.
AIR FLOW RESTRICTION: Airtight models are designed to restrict air flow from room into plenums in compliance to the WSEC-Washington State Energy Code (less than 2.0 CFM-Cubic Feet per Minutes)
MOUNTING FRAME: Supplied with (2) 24" adjustable bar hangers . Bar hangers equipped with (nail-less installation) 3/4" serrated barbed studs for secure mounting in wood joists.
JUNCTION BOX: Pre-wired, galvanized steel J-box with (4) knock-outs. Strain clamps and ground wire. Equipped with safety standard thermal protector rated for 90^0C.

LABELS: ETL/CETL listed (ETL listed number: 4005878) ETL listed for through-branch wiring (4) No. 12 AWG 90^0C and damp locaitons.

COMPATIBLE TRIMS

Model	Description	Finish
R3-409	3" SHOWER TRIM W/ FROST GLASS MR16	matte white-brushed nickel-bronze
R3-421	3" ALZAK TRIM MR16	matte white-chrome with alzak-matte white with alzaK
R3-488	3" GIMBLE TRIM MR16	matte white-brushed nickel
R3-493	3" TRIM W/ BL BAFFLE MR16	matte white-brushed nickel
R3-509	3" SHOWER TRIM W/ FROST GLASS MR16	matte white-brushed nickel
R3-521	3" SQ ALZAK TRIM MR16	matte white -matte white with alzak
R3-555	3" SQ ON SQ TRIM MR16	matte white-brushed nickel
R3-559	3" SQ SHOWER TRIM W/ FROST GLASS MR16	matte white-brushed nickel
R3-588	3" SQ GIMBLE TRIM MR16	matte white-brushed nickel
R3-590	3" SQ BAFFLE TRIM MR16	matte white-brushed nickel
R3-593	3" SQ BAFFLE TRIM MR 16	matte white
R3-DR88	3" DIECAST GIMBLE TRIM MR16	matte white
R3-DR93	3" DIECAST BAFFLE TRIM MR16	matte white
R3-DS88	3" SQ DIECAST GIMBLE TRIM MR16	matte white
R3-DS90	3" DIECAST SQ BAFFLE TRIM MR 16	matte white
R3-DS93	3" SQ DIECAST BAFFLE TRIM MR16	matte white

CITY OF MIAMI BEACH
SEP 17 2019
ELECTRICAL REVIEW
BUILDING DEPARTMENT

OFFICE COPY
CITY OF MIAMI BEACH
APPROVED FOR PERMIT BY
THE FOLLOWING:
BUILDING:
ZONING: 9/17/19
PLUMBING: 9/17/19 9/18/19
ELECTRICAL:
MECHANICAL: ADB 9/17/19 9/18/19
FIRE PREVENTION:
FLOOD:
PUBLIC WORKS:
STRUCTURAL:
ELEVATOR
ROOFING:

APPROVED
MIAMI BEACH
FIRE DEPARTMENT

WESTHAVEN CONSTRUCTION
SERVICES INC.

Fine Line Engineers Inc.
Electrical, Mechanical, Plumbing
Fire Protection, Construction Administration
7600 W. 20TH AVE Suite #110 Hialeah, Fl. 33016
Voice: 786.953-4901 Fax: 786.953-4907
E-mail: cadinfo@flengineers.com
GEORGE FREIJO P.E.
REGISTERED ENGINEER NO. 32578
STATE OF FLORIDA CA#: 29796
DATE
©ALL RIGHTS RESERVED Fine Line Engineering, Inc.

No. 32578

Fine Line Engineers Inc.
Electrical, Mechanical, Plumbing, Fire Protection
Construction Administration Services
7600 WEST 20TH AVE SUITE 110. HIALEAH, FLORIDA. 33016
Tel: 786-953-4901
E-mail: svazquez@flengineers.com

REVISION BLOCK

NO.	DATE	DESCRIPTION
1	06-28-19	ELECTRICAL COMMENTS
2	09-05-19	AS BUILD REVISION & OWNER REQUIREMENTS

SUBMITAL BLOCK

NO.	DATE	DESCRIPTION

INTERIOR REMODELING TO:
YUKON OFFICES BUILDING
YANTRA 119 LLC.
SUITE 402
119 Washington Avenue, Miami Beach, FL 33139

E-1R

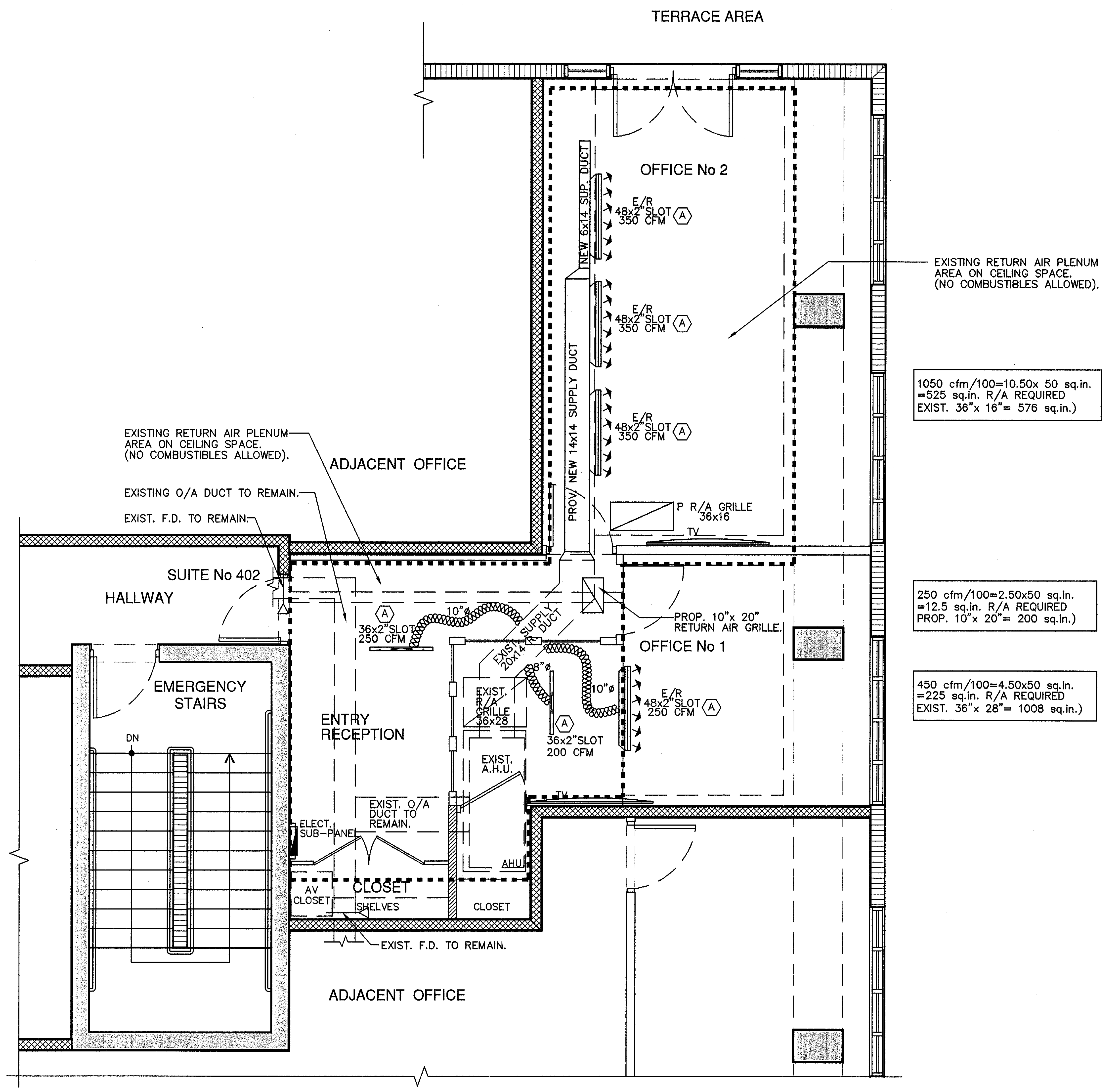
TERRACE AREA
OFFICE No 2
NEW 6x14 SUP. DUCT
PROV. NEW 14x14 SUPPLY DUCT
E/R 48x2"SLOT 350 CFM (A)
E/R 48x2"SLOT 350 CFM (A)
E/R 48x2"SLOT 350 CFM (A)
EXISTING RETURN AIR PLENUM AREA ON CEILING SPACE. (NO COMBUSTIBLES ALLOWED).
1050 cfm/100=10.50x 50 sq.in. =525 sq.in. R/A REQUIRED EXIST. 36"x 16"= 576 sq.in.)
P R/A GRILLE 36x16
TV
EXISTING RETURN AIR PLENUM AREA ON CEILING SPACE. (NO COMBUSTIBLES ALLOWED).
EXISTING O/A DUCT TO REMAIN.
EXIST. F.D. TO REMAIN.
ADJACENT OFFICE
SUITE No 402
HALLWAY
(A) 36x2"SLOT 250 CFM
10"ø
EXIST. 20x14 SUPPLY DUCT
PROP. 10"x 20" RETURN AIR GRILLE
250 cfm/100=2.50x50 sq.in. =12.5 sq.in. R/A REQUIRED PROP. 10"x 20"= 200 sq.in.)
OFFICE No 1
10"ø
E/R 48x2"SLOT 250 CFM (A)
450 cfm/100=4.50x50 sq.in. =225 sq.in. R/A REQUIRED EXIST. 36"x 28"= 1008 sq.in.)
EMERGENCY STAIRS
DN
ENTRY RECEPTION
EXIST. R/A GRILLE 36x28
(A) 36x2"SLOT 200 CFM
EXIST. A.H.U.
EXIST. O/A DUCT TO REMAIN.
ELECT. SUB-PANEL
AHU
AV CLOSET
CLOSET
SHELVES
CLOSET
EXIST. F.D. TO REMAIN.
ADJACENT OFFICE

YUKON OFFICES BUILDING SUITE 402 MECHANICAL PLAN

SCALE: 1/4"= 1'-0"

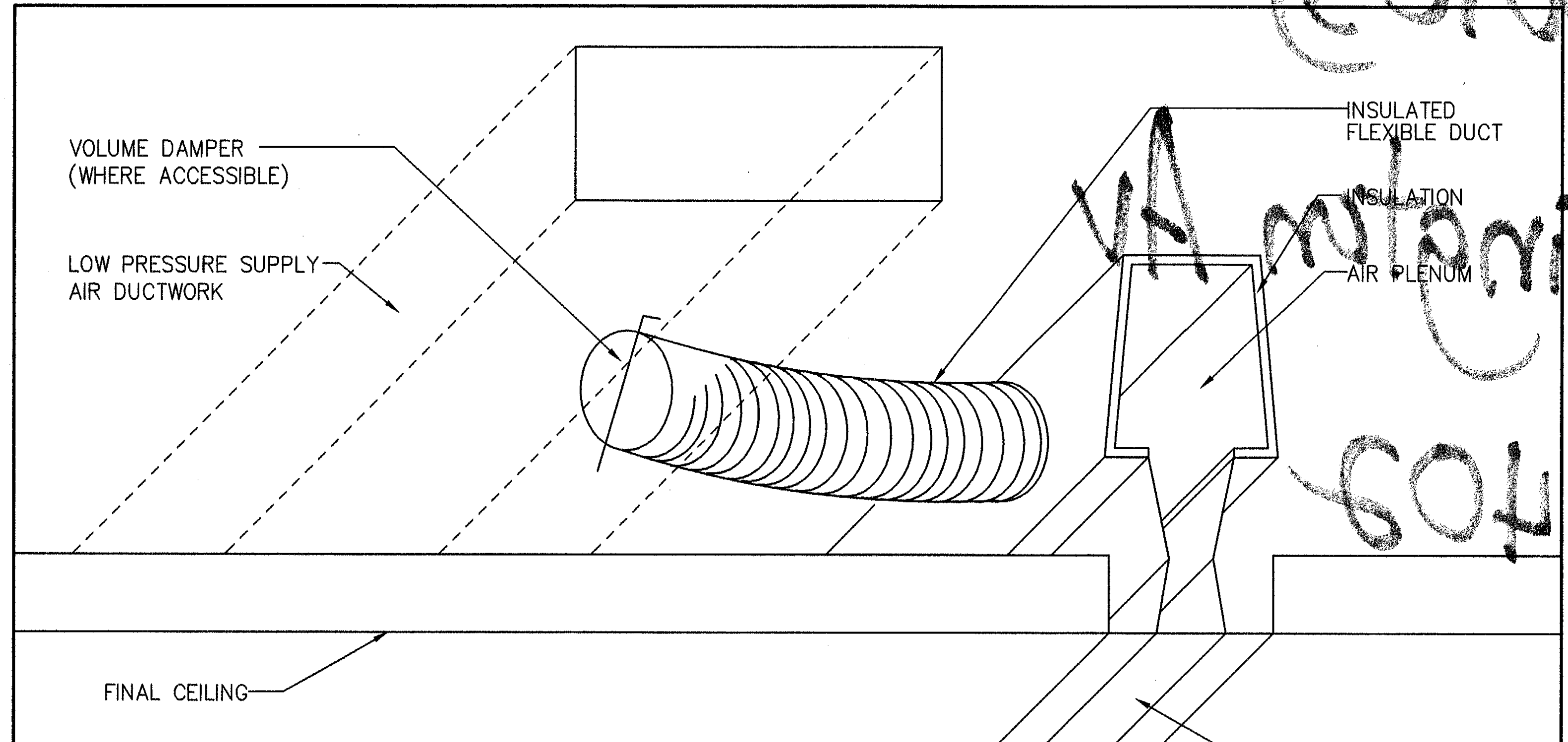
VOLUME DAMPER (WHERE ACCESSIBLE)
LOW PRESSURE SUPPLY AIR DUCTWORK
INSULATED FLEXIBLE DUCT
INSULATION
AIR PLENUM
FINAL CEILING
LINEAR DIFFUSER

LINEAR DIFFUSER CONNECTION DETAIL

N.T.S.

LEGEND

E	DENOTE EXISTING TO REMAIN
E/R	DENOTE EXISTING TO BE RELOCATED OR REMODELING
P.	PROPOSED A NEW ONE
R/A	RETURN AIR

NOTES:

1.–THE AIR CONDITIONING SYSTEM IS EXISTING AND REMAIN THE SAME BUT INCLUDED SOME GRILLE AND OR DUCTS MODIFICATIONS AS PER PLAN.

2.–THE MAIN DUCTS AND AIR FLOW ARE EXISTING AND REMAIN THE SAME BUT INCLUDED SOME RELOCATIONS AS PER PLAN.

3.–THE RETURNS AIR GRILLE/DUCTS ARE NOT EXISTING AND WE WILL CREATED AS PER PLANS.

HVAC DESIGN REQUIRES:	YES	NO
DUCT SMOKE DETECTOR		✓
FIRE DAMPER(S)		✓
SMOKE DAMPER(S)		✓
FIRE RATED ENCLOSURE		✓
FIRE RATED ROOF/FLOOR CEILING ASSEMBLY		✓
FIRE STOPPING		✓
SMOKE CONTROL		✓

NOTES:

–AT THESE REMODELING/RENOVATION WORK,THE WORKING DRAWINGS ARE CONSIDERED AS A GUIDE AND HAVE TO BE VERIFY AT FIELD, AS PER EXISTING CONDITIONS.

–IF ANY DISCREPANCIES OCCUR BETWEEN EXISTING CONDITIONS, CONSTRUCTION DRAWINGS AND/OR DESIGN CONSULTANT DRAWINGS, THE CONTRACTOR NOTIFY TO ARCHITECT AND DESIGN CONSULTANT FOR DIRECTION PRIOR TO COMMENCING ANY WORK.

SCOPE OF WORK:

THE AIR CONDITIONING SYSTEM (MACHINE, MAIN SUPPLY DUCTS, MAIN RETURN BY DOOR AND OVERALL AIR FLOW) ARE EXISTING AND REMAIN THE SAME BUT THE JOB IS FOR REPLACED THE EXISTING BOOTS AND GRILLES FOR A NEW LINEAL ONES WITH SAME AIR FLOW AND SOME MODIFICATIONS ARE PROPOSED ACCORDING PLANS.

AIR DISTRIBUTION SCHEDULE

MARK	USE	TYPE	ACCESORIES	NECK SIZE CFM RANGE	MANUFACTURER MODEL NUMBER
(A)	SUPPLY	1-1"SLOT LINEAR SLOT DIFFUSER	O. B. D. W/YOUNG REGULATOR CONTROL. PROVIDED INSULATED BOOT PLENUM.	SEE DRAWINGS	METALAIRE 6610-12-1
~~(B)~~	~~RETURN~~	8-1"SLOT ~~LINEAR SLOT~~ DIFFUSER	~~INSULATED~~ PLENUM.	~~SEE DRAWINGS~~	~~METALAIRE~~ 6610-12-1

NOTES:

1.– CONTRACTOR SHALL COORDINATE AIR DISTRIBUTION DEVICES TYPE & LOCATION WITH CEILING TYPES & ARRANGEMENT PRIOR TO ORDERING AND INSTALLATION OF DEVICES.

2.– BASIS OF DESIGN IS METALAIRE OR APPROVED EQUALS: TITUS, PRICE OR KRUGER.

3.– CONTRACTOR SHALL PROVIDE A YOUNG REGULATOR WITH REMOTE ADJUSTMENT CABLE IN ALL SLOT DIFFUSERS.

LINEAL GRILLE TYPE B ARE NOT USED.

APPROVED
MIAMI BEACH
FIRE DEPARTMENT

OFFICE COPY
CITY OF MIAMI BEACH
APPROVED FOR PERMIT BY
THE FOLLOWING:
BUILDING:
ZONING:
PLUMBING:
ELECTRICAL:
MECHANICAL:
FIRE PREVENTION
FLOOD:
PUBLIC WORKS:
STRUCTURAL:
ELEVATOR:
ROOFING:

9/11/19 9/18/19

Fine Line Engineers Inc.
Electrical, Mechanical, Plumbing
Fire Protection, Construction Administration
7600 W. 20th Ave Suite 110 Hialeah, FL 33016

No. 32578
CA 29796

Fine Line Engineers Inc.
Electrical, Mechanical, Plumbing, Fire Protection
Construction Administration Services
7600 WEST 20TH AVE SUITE 110. HIALEAH, FLORIDA. 33016
Tel: 786-953-4901
E-mail: svazquez@flengineers.com

REVISION BLOCK

NO.	DATE	DESCRIPTION

SUBMITAL BLOCK

NO.	DATE	DESCRIPTION

INTERIOR REMODELING TO:
YUKON OFFICES BUILDING
YANTRA 119 LLC.
SUITE 402
119 Washington Avenue, Miami Beach, FL 33139

M-1R

BV1910876
(BCB1900103)
119 Washington Av
Unit #402

Rv 1911232

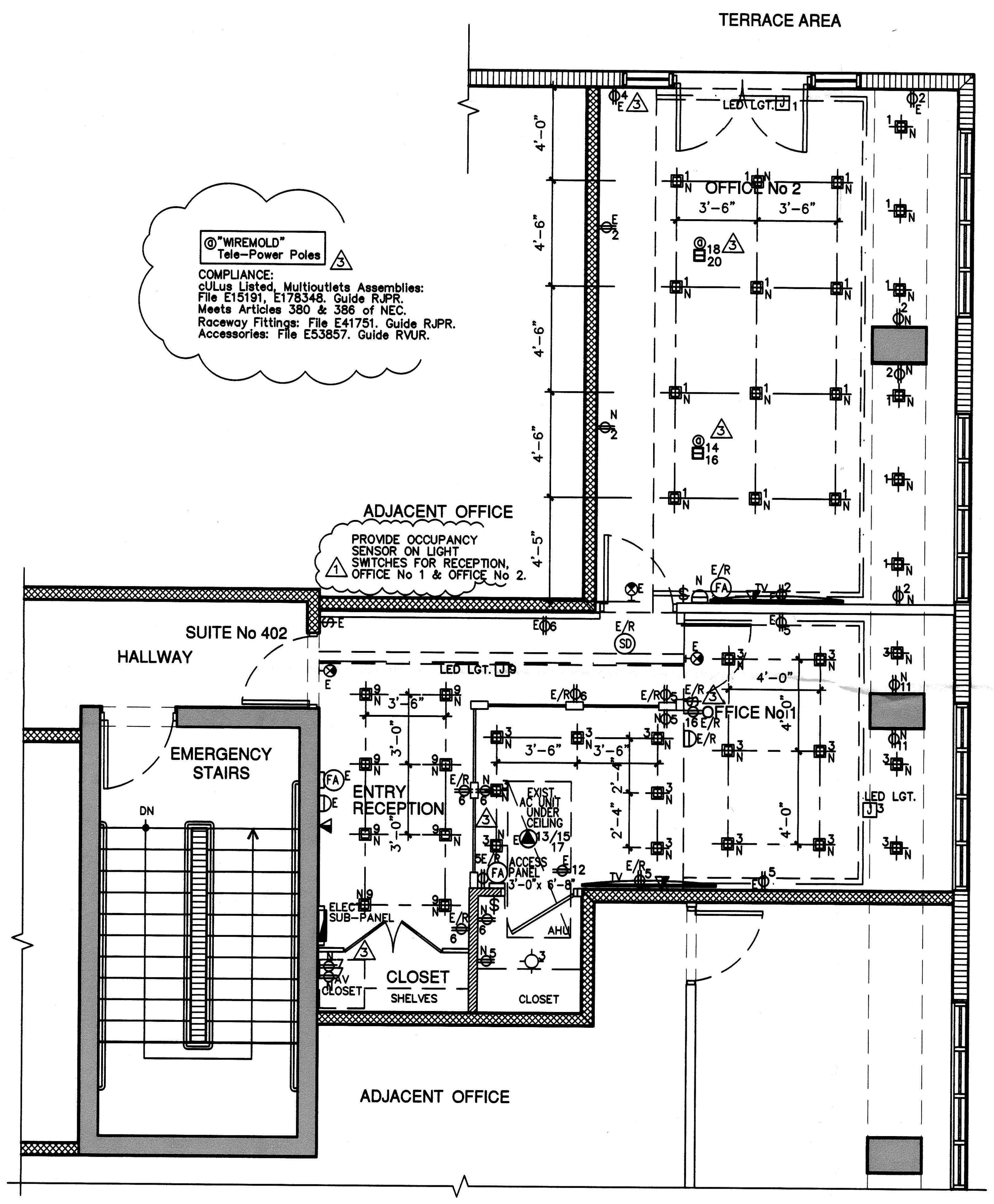
TERRACE AREA
OFFICE No 2
OFFICE No1
ENTRY RECEPTION
SUITE No 402
HALLWAY
EMERGENCY STAIRS
DN
ADJACENT OFFICE
ADJACENT OFFICE
CLOSET
SHELVES
CLOSET
A/V CLOSET
ELEC SUB-PANEL
ACCESS PANEL 3'-0"x 6'-8"
EXIST. AC UNIT UNDER CEILING
AHU
LED LGT.
LED LGT.
LED LGT.
4'-0"
4'-6"
4'-6"
4'-6"
4'-5"
3'-6"
3'-6"
3'-0"
2'-4"
@"WIREMOLD" Tele-Power Poles 3
COMPLIANCE:
cULus Listed, Multioutlets Assemblies:
File E15191, E178348. Guide RJPR.
Meets Articles 380 & 386 of NEC.
Raceway Fittings: File E41751. Guide RJPR.
Accessories: File E53857. Guide RVUR.
1 PROVIDE OCCUPANCY SENSOR ON LIGHT SWITCHES FOR RECEPTION, OFFICE No 1 & OFFICE No 2.
E
E/R
N

YUKON OFFICES BUILDING SUITE 402
ELECTRICAL PLAN

SCALE: 1/4"= 1'-0"

LEGEND

⊖	ELECTRICAL DBL. OUTLET
⊡	ELECTRICAL FLOOR OUTLET
$	1-WAY SWITCH
◪	ELECTRICAL PANEL
⊖	EMERGENCY LIGHTS W/BATTERY POWER
⌖	LIGHT RECEPTACLES
(SD)	SMOKE DETECTOR AT CEILING
(SD)	SMOKE DETECTOR AT WALLS
(FA)	FIRE ALARM (SOUND) AT CEILING
(FA)	FIRE ALARM (SOUND) AT WALLS
J	JUNCTION BOX
▣	RECESS LIGHT SQUARE
○	RECESS LIGHT ROUND
K	KEY PAD
⊗	EXIT SIGN
◀	DATA-CABLE
TV	TV SET
⟨o⟩	MOTION SENSOR SWITCH

E	DENOTE EXISTING TO REMAIN
E/R	DENOTE EXISTING TO BE RELOCATED
N	DENOTE NEW

NOTES:

1.-NOT ANY APPLIANCE LOAD HAS BEEN ADDED.

2.-ALL SMOKE DETECTORS SHALL BE 120 V. W/ BATERY BACKUP, INTERCONNECTED AND LOCATED 36" MIN. AWAY FROM ANY A/C GRILLE OR REGISTER.

NOTE:

IF HAVE TO RELOCATED ANY ELECTRIC FIRE ALARM SOUND, THE SHOP-DRAWINGS FOR IT WILL BE PROVIDED.

EXISTING SUB-PANEL

MODEL: SQUARE D LOAD CENTER
SERVICE: 1ø 3W-120/240V
MOUNTING: RECESSED
MAIN FEEDER: 3# 6 THWN CU, 1# 10 THWN(G) IN 1"ø COND.

EXIST. MAIN FEEDER = 60 AMP.

MAIN BUS: 60 AMP.
NEUTRAL: 60 AMP.
MAINS: 60 A MCB
A.I.C.: 10,000

CKT.	DESCRIPTION	LOAD	Bk.	P	WIRE	COND.	CKT.	DESCRIPTION	LOAD	Bk.	P	WIRE	COND.
1	LIGHTINGS OFFICE #2	1.0	20	1	12	1/2"	2	RECEPTACLES OFF. #2	1.0	20	1	12	1/2"
3	LIGHTINGS OFF. #1 (SD)	1.0	20	1	12	1/2"	4	RECEPTACLES PRINT	1.0	20	1	12	1/2"
5	OUTLETS OFFICE #1	1.0	20	1	12	1/2"	6	RECEPTACLES ENTRY	1.0	20	1	12	1/2"
7	OUTLETS A/V CLOSET	1.0	20	1	12	1/2"	8	SPARE		20			
9	LIGHTS RECEPTION	1.0	20	1	12	1/2"	10	SPARE		20			
11	OUTLETS FURN. OFF. #1	1.0	20	1	12	1/2"	12	AC CONDENSATE PUMP	1.0	20	1	12	1/2"
13	A/C	5.4	40	2	8	3/4"	14	RECEPT. OFFICE #2	1.0	20	1	12	1/2"
15							16	RECEPT. OFFICE #2	1.0	20	1	12	1/2"
17							18	RECEPT. OFFICE #2	1.0	20	1	12	1/2"
19	SPARE						20	RECEPT. OFFICE #2	1.0	20	1	12	1/2"
21	SPARE						22	SPARE					
23	SPARE						24	SPARE					
25	SPARE						26	SPARE					
27	SPARE						28	SPARE					
29	SPARE						30	SPARE					

NEW CIRCUITS 3

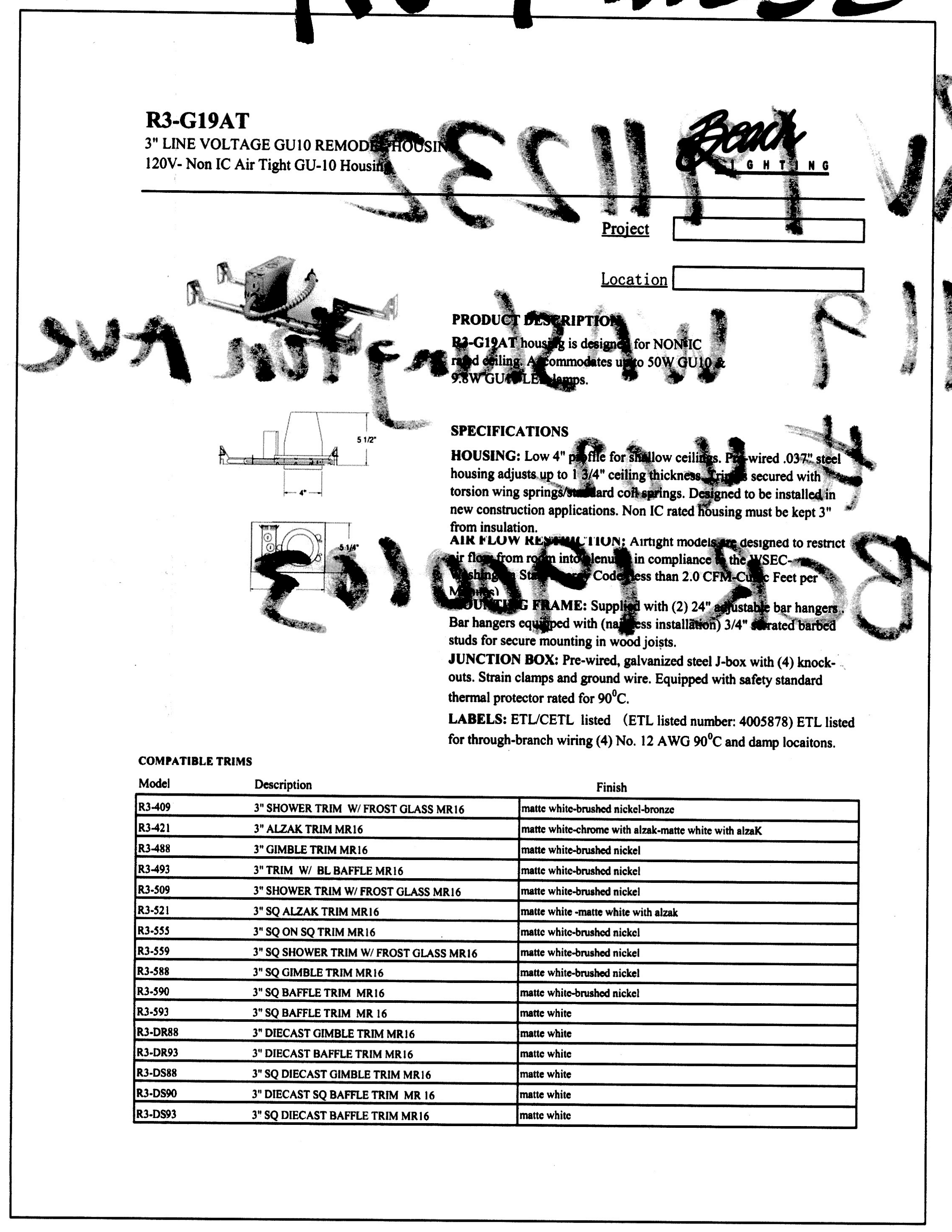

R3-G19AT
3" LINE VOLTAGE GU10 REMODEL HOUSING
120V- Non IC Air Tight GU-10 Housing

Beach LIGHTING

Project
Location

PRODUCT DESCRIPTION
R3-G19AT housing is designed for NON IC rated ceiling. Accommodates up to 50W GU10 & 9.8W GU10 LED lamps.

SPECIFICATIONS

HOUSING: Low 4" profile for shallow ceilings. Pre-wired .037" steel housing adjusts up to 1 3/4" ceiling thickness. Trim is secured with torsion wing springs/standard coil springs. Designed to be installed in new construction applications. Non IC rated housing must be kept 3" from insulation.

AIR FLOW RESTRICTION: Airtight models are designed to restrict air flow from room into plenum in compliance to the WSEC-Washington State Energy Code, less than 2.0 CFM-Cubic Feet per Minutes)

MOUNTING FRAME: Supplied with (2) 24" adjustable bar hangers. Bar hangers equipped with (nailless installation) 3/4" serrated barbed studs for secure mounting in wood joists.

JUNCTION BOX: Pre-wired, galvanized steel J-box with (4) knock-outs. Strain clamps and ground wire. Equipped with safety standard thermal protector rated for 90°C.

LABELS: ETL/CETL listed (ETL listed number: 4005878) ETL listed for through-branch wiring (4) No. 12 AWG 90°C and damp locaitons.

COMPATIBLE TRIMS

Model	Description	Finish
R3-409	3" SHOWER TRIM W/ FROST GLASS MR16	matte white-brushed nickel-bronze
R3-421	3" ALZAK TRIM MR16	matte white-chrome with alzak-matte white with alzaK
R3-488	3" GIMBLE TRIM MR16	matte white-brushed nickel
R3-493	3" TRIM W/ BL BAFFLE MR16	matte white-brushed nickel
R3-509	3" SHOWER TRIM W/ FROST GLASS MR16	matte white-brushed nickel
R3-521	3" SQ ALZAK TRIM MR16	matte white -matte white with alzak
R3-555	3" SQ ON SQ TRIM MR16	matte white-brushed nickel
R3-559	3" SQ SHOWER TRIM W/ FROST GLASS MR16	matte white-brushed nickel
R3-588	3" SQ GIMBLE TRIM MR16	matte white-brushed nickel
R3-590	3" SQ BAFFLE TRIM MR16	matte white-brushed nickel
R3-593	3" SQ BAFFLE TRIM MR 16	matte white
R3-DR88	3" DIECAST GIMBLE TRIM MR16	matte white
R3-DR93	3" DIECAST BAFFLE TRIM MR16	matte white
R3-DS88	3" SQ DIECAST GIMBLE TRIM MR16	matte white
R3-DS90	3" DIECAST SQ BAFFLE TRIM MR 16	matte white
R3-DS93	3" SQ DIECAST BAFFLE TRIM MR16	matte white

OFFICE COPY
CITY OF MIAMI BEACH
APPROVED FOR PERMIT BY
THE FOLLOWING:
BUILDING: ~~BC1902019~~
ZONING:
PLUMBING:
ELECTRICAL: 10-28-19
MECHANICAL:
FIRE PREVENTION: TA/MSTby 10/23/19
FLOOD:
PUBLIC WORKS:
STRUCTURAL
ELEVATOR:
ROOFING:

NOTICE: In addition to the requirement of this permit there may be additional restrictions applicable to this property that may be found in the Public Records of this County and there may be additional permits required from other government entities such as water management's districts, state agencies, or federal agencies. The City of Miami Beach assumes no responsibility for accuracy of or results from these plans which are approved subject to compliance with all Federal, State, and Local Laws, Rules, and Regulations

City of Miami Beach
Fire Prevention Division
PLANS APPROVED

WESTHAVEN CONSTRUCTION
SERVICES INC.

Fine Line Engineers Inc.
Electrical, Mechanical, Plumbing
Fire Protection, Construction Administration
7600 W. 20TH AVE Suite #110 Hialeah, Fl. 33016
Voice: 786.953-4901 Fax: 786.953-4907
E-mail: [illegible]@flengineers.com

GEORGE FREIJO
LICENSE
No. 32578
STATE OF FLORIDA
PROFESSIONAL ENGINEER
GEORGE FREIJO, P.E.
REGISTERED ENGINEER NO. 32578
STATE OF FLORIDA, CA. 29796
DATE
©ALL RIGHTS RESERVED
Fine Line Engineering, Inc.

Fine Line Engineers Inc.
Electrical, Mechanical, Plumbing, Fire Protection
Construction Administration Services
7600 WEST 20TH AVE SUITE 110. HIALEAH, FLORIDA. 33016
Tel: 786-953-4901
E-mail: svazquez@flengineers.com

REVISION BLOCK

NO.	DATE	DESCRIPTION
1	06-28-19	ELECTRICAL COMMENTS
2	09-05-19	AS BUILD REVISION & OWNER REQUIREMENTS
3	09-27-19	AS BUILD REVISION & INSPECTOR COMMENTS

SUBMITAL BLOCK

NO.	DATE	DESCRIPTION

INTERIOR REMODELING TO:
YUKON OFFICES BUILDING
YANTRA 119 LLC.
SUITE 402
119 Washington Avenue, Miami Beach, FL 33139

E-1R

Rv 1911232

119 WAShington Ave

#402

BCR 1900103

RV# 2011827

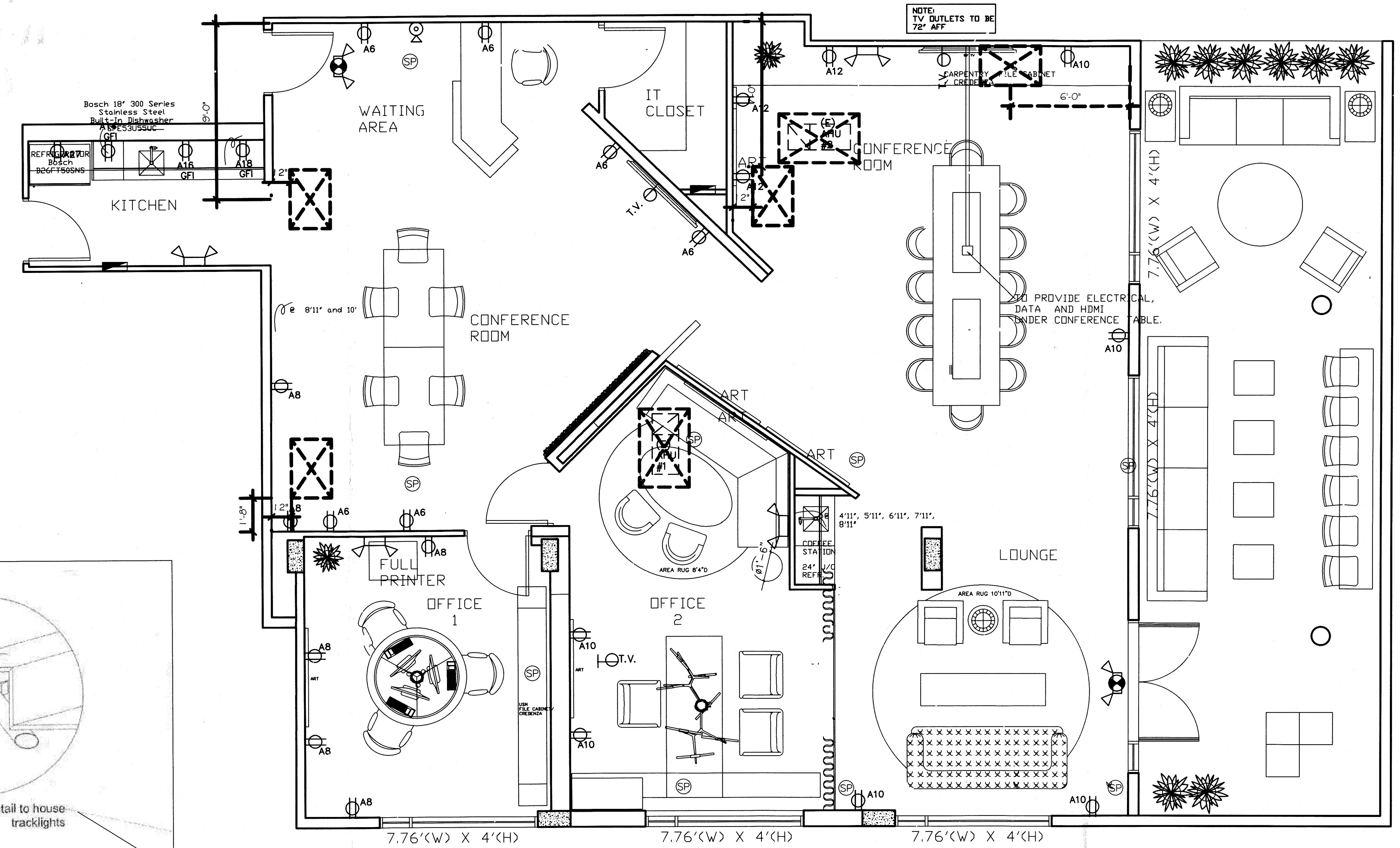
NOTE: TV OUTLETS TO BE 72" AFF
Bosch 18' 300 Series Stainless Steel Built-In Dishwasher SPE53U55UC
REFRIGERATOR Bosch B26FT50SNS
GFI
A16
A18
KITCHEN
WAITING AREA
IT CLOSET
CONFERENCE ROOM
(E) AHU
CARPENTRY FILE CABINET CREDENZA
TO PROVIDE ELECTRICAL, DATA AND HDMI UNDER CONFERENCE TABLE.
@ 8'11' and 10'
ART
FULL PRINTER
OFFICE 1
OFFICE 2
LOUNGE
T.V.
COFFEE STATION
24" U/C REFR.
AREA RUG 10'11"D
A6
A8
A10
A12
7.76'(W) X 4'(H)

ELECTRIC POWER PLAN

1/4"=1'-0"

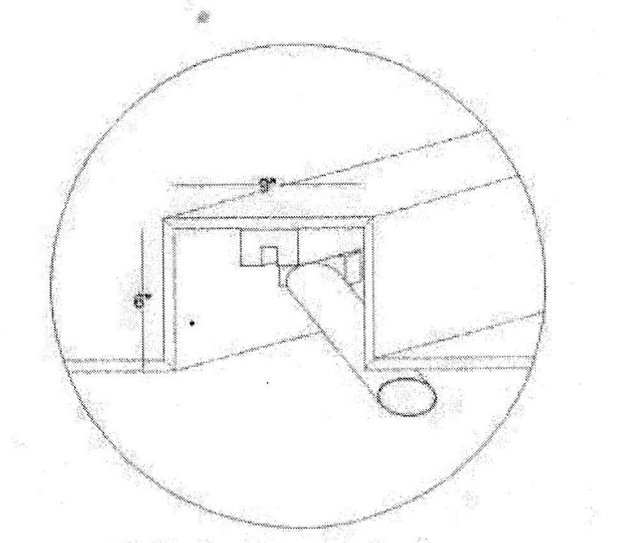
Troffed ceiling detail to house tracklights

AS PER SCOPE OF WORK:
1. ALL NEW LIGHTING & RECEPTACLES

LIGHT FIXTURES MUST BE LISTED BY NRTL AS PER NEC 410.6

CEILING LEGEND:
DENOTES DROP CLG.-------------- ▨

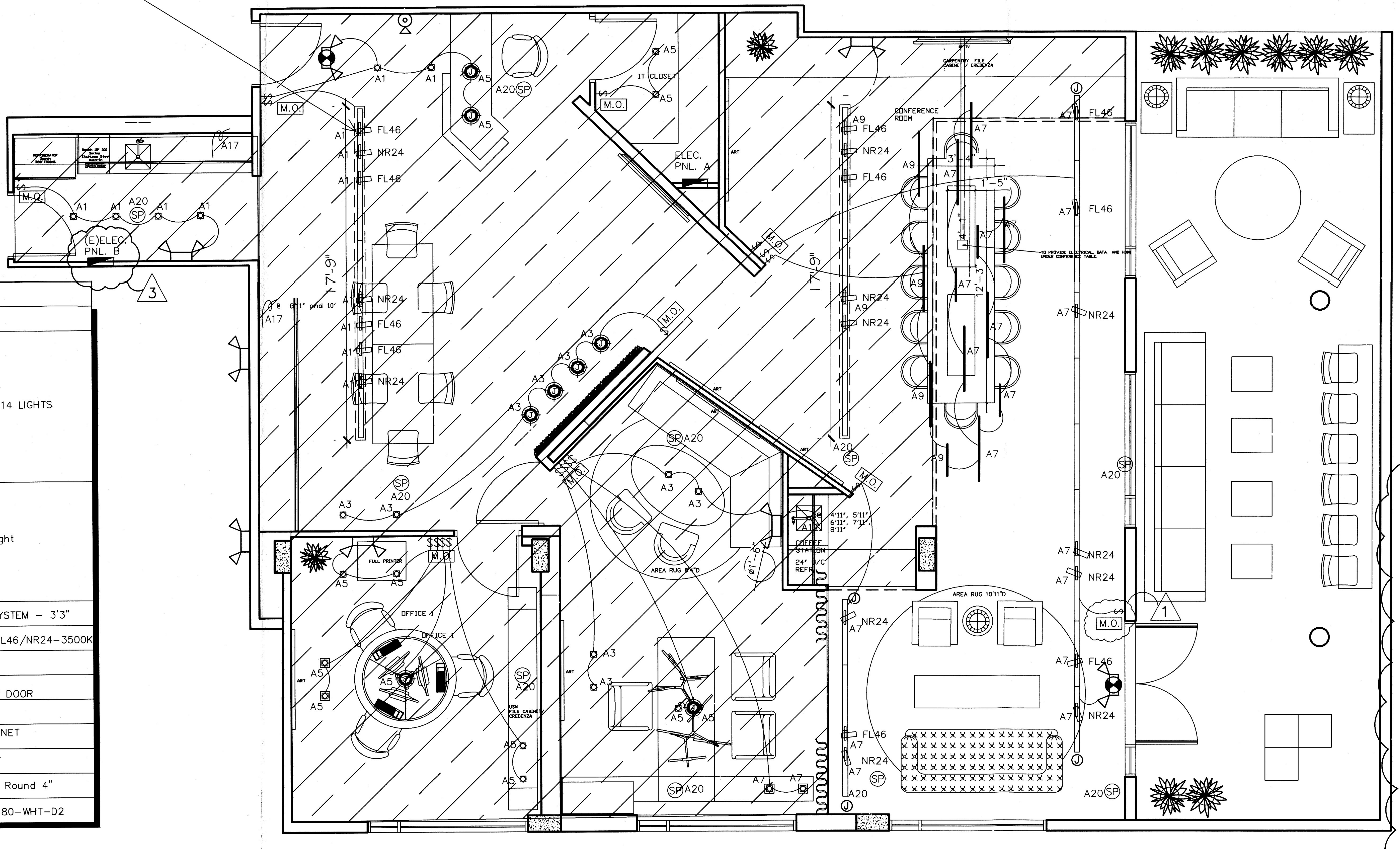
M.O.
(E)ELEC. PNL. B
ELEC. PNL. A
IT CLOSET
CONFERENCE ROOM
OFFICE 1
FL46
NR24
A1
A3
A5
A7
A9
A17
A20
SP
3
1
7'-9"
AREA RUG 10'11"D

REFLECTIVE LIGHTING PLAN

1/4"=1'-0"

	LIGHTING LEGEND
SYMBOL	DESCRIPTION
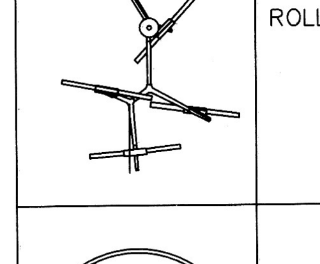	ROLL & HILL AGNES PENDANT – 14 LIGHTS
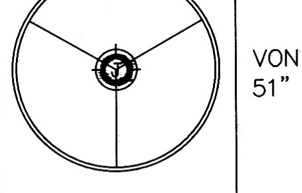	VONN VMC34912BL Tania SingleLight 51" Wide LED Ring Chandelier
▭	KREON 48V MAGNETIC PROFILE SYSTEM – 3'3"
	KU48M–40–HOLPS–WHT.30–90–FL46/NR24–3500K
	ELECTRIC PANEL
	PROVIDE 24V WHIP FOR CABINETRY LIGHTING SWITCHED AT DOOR
SP	ELIPSON BELL 6 SPEAKER
	LED STRIP –LIGHT COVE OR CABINET 3500K
	WAC Lighting MO–1035F–840–WT
	Globe Electric 90948 Adjustable Round 4"
J	KUHOL–40–PEC–DW–NR–40–SO–80–WHT–D2

150 AMPS (EXSTG) 120/240, 1 Ø ,3W — 10,000 A.I.C. RATING ELECTRICAL SCHEDULE (PNL. A) — OFFICE — 3-#1/0 THW CU IN 2" COND.

	LOCATION	O.C.P.	WIRE	VOLTS	COND	LOAD	LOAD	COND	VOLTS	WIRE	O.C.P.	LOCATION	
1	GEN. LTS.	20-1	12	120	1/2"	1,776 SF X 3W/SF=5,328	10,000	3/4"	240	6	50-2	(EXSTG) AHU-1	2
3		20-1	12	120	1/2"								4
5		20-1	12	120	1/2"		1080	1/2"	120	12	20-1	GEN. RECEPT.	6
7		20-1	12	120	1/2"		1080	1/2"	120	12	20-1	GEN. RECEPT.	8
9		20-1	12	120	1/2"		1080	1/2"	120	12	20-1	GEN. RECEPT.	10
11	(EXSTG) AHU-2	40-2	8	240	3/4"	7,500	540	1/2"	120	12	20-1	GEN. RECEPT.	12
13							1,500	1/2"	120	12	20-1	DISHWASHER	14
15	EMERG. LT.	20-1	12	120	1/2"	500	3,000	1/2"	120	12	20-1	SMALL APPL.	16
17	CABINET LTS.	20-1	12	120	1/2"	500							18
19	SIGN	20-1	12	120	1/2"	1,200		1/2"	120	12	20-1	SPEAKER SYSTEM	20
21	SPARES											SPARES	22
23													24
25													26
27													28
29													30
31													32
33													34
35													36
37													38
39													40
41	↓											↓	42

33,308W/240=139 AMPS THEREFORE
EXSTG. 150 AMP SERVICE O.K.

LEGEND

EMERGENCY BATTERY BACK-UP LIGHT & EXIT SIGN COMBO

☒ — ELECTRIC PANEL (EXSTG.)

┆ — 2'X4' FLORESCENT LT.

EMERGENCY BATTERY BACK-UP LIGHT

FIRE EXTINGUISHER (CLASS ABC 5#)

LEGEND

SYM.	REMARKS
M.O.	MANUAL OVERIDE W/ TIME CLOCK

*NOTE: OCCUPANCY SENSOR FOR RESTROOM AREAS, ROOMS, DINING ROOM, LOUNGE & OFFICE SHALL COMPLY W/ THE FLA ENERGY CONSERVATION C405.2.2.2 SHALL HAVE AUTOMATIC LIGHTING CONTROLS W/ MANUAL OVER RIDE

ELECTRICAL LEGEND :

- DUPLEX RECEPTACLE OUTLET (110 VOLTS)
- W.P.
- SPECIAL PURPOSE OUTLET (120 VOLTS)
- DUPLEX RECEPTACLE OUTLET (110 VOLTS) ONE HOT LEG, ONE SWITCHED LEG
- SPECIAL PURPOSE OUTLET (220 VOLTS)
- Ⓙ ELECTRIC JUNCTION BOX
- T.V. TELEVISION OUTLET
- ▶ TELEPHONE OUTLET
- ELECTRIC PANEL
- ELECTRIC METER
- ⧄ EXHAUST FAN
- P PENDANT LIGHT FIXTURE
- R RECESSED LIGHT FIXTURE
- CTV COMPUTER/TV CABLE
- CEILING FAN
- Ⓢ SMOKE DETECTOR
- $ ELECTRIC LIGHT SWITCH
- Ⓣ THERMOSTAT

City of Miami Beach
Fire Prevention Division
PLANS APPROVED

EGRESS ILLUMINATION
MIN. 1 FC PER FBC 1006

SCOPE OF WORK: (12-11-19)
1. EXSTG PANEL B W/ CIRCUITS SHOWN AS IS

3

150 AMPS (EXSTG) 120/240, 1 Ø ,3W — 10,000 A.I.C. RATING ELECTRICAL SCHEDULE (PNL. B) — OFFICE — 3-#1/0 THW CU IN 2" COND.

	LOCATION	O.C.P.	WIRE	VOLTS	COND	LOAD	LOAD	COND	VOLTS	WIRE	O.C.P.	LOCATION	
1	GEN. LTS.	20-1	12	120	1/2"	861 SF X 3W/SF=2,583	7,000	3/4"	240	8	40-2	(EXSTG) AHU-1	2
3	GEN. LTS.	20-1	12	120	1/2"								4
5	GEN. LTS.	20-1	12	120	1/2"		1080	1/2"	120	12	20-1	GEN. RECEPT.	6
7	GEN. LTS.	20-1	12	120	1/2"		1080	1/2"	120	12	20-1	GEN. RECEPT.	8
9	TELEPHONE	15-1	14	120	1/2"	100	1,500	1/2"	120	12	20-1	COPY M.	10
11	UPS SYSTEM	20-1	12	120	1/2"	1,800	1,500	1/2"	120	12	20-1	REFRIG.	12
13	SPARES						540	1/2"	120	12	20-1	A/C COND. PUMP	14
15												SPARES	16
17													18
19													20
21													22
23	↓											↓	24

17,183W/240=72 AMPS THEREFORE
EXSTG. 150 AMP SERVICE O.K.

CLAUDIO JOFRE, P.E.
11075 NW 27TH PL
SUNRISE, FL. 33322
OFF: (786)382–1695
ENGINEER
FLA. REG. NO. #28531

No. 28531
12-13-19
DATE

12 FEB. 2019

1 REV. 8–1–19

2 REV. 8–26–19

3 REV. 12–10–19

PROPOSED OFFICE REMODEL

119 WASHINGTON AVE SU. 502
MIAMI BEACH, FL

OFFICE COPY
CITY OF MIAMI BEACH
APPROVED FOR PERMIT BY
THE FOLLOWING:
BUILDING:
ZONING:
PLUMBING:
ELECTRICAL:
MECHANICAL:
FIRE PREVENTION:
FLOOD:
PUBLIC WORKS:
STRUCTURAL:
ELEVATOR:
ROOFING:

1-3-20
QJR 1/3/20
1/3/20

NOTICE: In addition to the requirement of this permit there may be additional restrictions applicable to this property that may be found in the Public Records of this County and there may be additional permits required from other government entities such as water management districts, state agencies, or federal agencies.
The City of Miami Beach assumes no responsibility for accu results from these plans which are approved subject to compliance all Federal, State, and Local Laws, Rules, and

E–1

KV2011 827
119 WASHINGTON AVE
(BC19[illegible]502)