POWER & SIGNAL PLAN LEGEND

- OUTLET – DUPLEX
- OUTLET – EXISTING TO REMAIN
- OUTLET – DEDICATED TO APPLIANCE
- OUTLET – GROUND FAULT INTERRUPTOR
- OUTLET – QUADRAPLEX
- OUTLET – SPECIAL PURPOSE
- OUTLET – VOICE
- OUTLET – VOICE WALL MOUNTED
- OUTLET – DATA
- OUTLET – VOICE/DATA
- CARD READER
- THERMOSTAT
- WIRELESS ACCESS
- DOORBELL IN ADA UNITS ONLY
- VOICE, DATA & VIDEO – WALL MOUNT
- SMOKE DETECTOR
- DOOR BUZZER
- SWITCH
- SWITCH "3" – 3 WAY "4" – 4 WAY
- DIMMER SWITCH

REFLECTED CEILING PLAN LEGEND

- GWB CEILING/SOFFIT
- CEILING HEIGHT KEY – CEILING HEIGHT – AFF – CEILING TYPE
- DOWNLIGHT
- WALL SCONCE
- SMOKE DETECTOR
- SPRINKLER
- CEILING FIXTURE
- SUPPLY DIFFUSER
- RETURN AIR GRILLE
- HVAC ACCESS PANEL
- REPLACE EXISTING FIXTURE WITH NEW FIXTURE IN SAME LOCATION

FINISH PLAN LEGEND

- NEW PARTITION
- EXISTING PARTITION
- EXISTING STRUCTURE
- KEY NOTE INDICATOR
- INDICATES DIRECTION OF DOMINANT STRIPE IN CARPET OR RUG
- DETAIL REFERENCE
- FINISH TAG
- ALIGN
- TILE FLOORING
- LINOLEUM FLOORING
- ACCENT TILE

POWER & SIGNAL PLAN NOTES

1. ALL EXISTING POWER OUTLETS TO REMAIN.
2. MOUNTING HEIGHTS OF ALL DEVICES ARE SHOWN ON TYPICAL POWER & SIGNAL MOUNTING HEIGHT KEY, U.O.N. REFER TO A-003 DRAWINGS.
3. LOCATION OF ALL POWER & SIGNAL DEVICES ARE TO BE COORDINATED FROM ARCHITECTURAL DRAWINGS. NOTIFY ARCHITECT OF ANY DISCREPANCIES BETWEEN ARCHITECTURAL AND ELECTRICAL DRAWING PRIOR TO INSTALLATION. REFER TO ENGINEER'S DRAWINGS FOR OTHER REQUIREMENTS.
4. ALL OUTLETS LOCATED ABOVE OR BELOW THE COUNTER TOPS IN KITCHEN, COFFEE AREAS, TOILET ROOMS, ETC (WET AREAS) SHALL BE GFI AS PER CODE (REFER TO ELECTRICAL DRAWINGS).
5. STAGGER ALL DEVICES SHOWN BACK TO BACK ON OPPOSITE SIDES OF SHARED PARTITIONS. DEVICE SHALL NOT OCCUPY THE SAME STUD CAVITY.
6. LOCATE SWITCHES 6" CLEAR OF THE EDGE OF DOOR FRAME, U.O.N. AT DOUBLE DOORS OR DOORS WITH SIDELIGHTS, LOCATE SWITCHES 3'-6" FROM DOOR AT SIDE WALL, U.O.N.
7. WHERE SWITCHES FOR DEVICES OTHER THAN LIGHTS (I.E. EXHAUST FAN, PROJECTION SCREEN) ARE ADJACENT TO LIGHT SWITCHES, LOCATE LIGHT SWITCHES CLOSEST TO THE ENTRY DOOR.
8. FINISHES FOR COVER PLATES TO BE WHITE U.O.N. FINISHES FOR DEVICES TO BE WHITE U.O.N.
9. REFER TO ACCESS CONTROL DRAWINGS FOR CARD READER LOCATIONS.

REFLECTED CEILING PLAN NOTES

1. ALL CEILINGS AND SOFFITS TO BE PAINTED PT-07 (FLAT FINISH), U.O.N. ALL BATHROOM CEILINGS TO BE PAINTED PT-01 (EGGSHELL FINISH).
2. ALL LIGHT FIXTURES TO BE REMOVED AND REPLACED WITH NEW FIXTURES PER LIGHTING SCHEDULE.
3. ALL DIMENSIONS OF NEW FIXTURES, DEVICES, SPRINKLER HEADS, ETC. ARE TO CENTERLINE OF FIXTURE, U.O.N. WHERE ITEMS ARE IN LINE, CENTERLINE OF ITEMS OR GROUP OF ITEMS TO ALIGN, U.O.N.
4. ALL MEP-FP DEVICE LOCATIONS NOT SHOWN ON DRAWINGS, OR IN CONFLICT WITH MEP-FP DRAWINGS, ARE TO BE COORDINATED WITH ARCHITECT PRIOR TO INSTALLATION.
5. LAYOUT IS FOR INFORMATION ONLY – SEE THE ELECTRIC DRAWINGS FOR QUANTITY AND FIXTURE LOCATIONS.
6. SEE MEP-FP DRAWINGS FOR LOCATIONS OF SMOKE DETECTORS, SPRINKLER HEAD, EXIT SIGNS, ETC6.
7. LOCATION OF CLOSET FIXTURE IN HADDON HALL MAY VARY. REPLACE EXISTING FIXTURE WITH NEW FIXTURE KEEPING THE SAME FIXTURE LOCATION.
8. WALL SCONCES SHOWN ON PLAN. REFER TO ROOM ELEVATIONS FOR HEIGHT.

FINISH PLAN NOTES

1. ALL WALLS TO BE PAINTED PT-01, U.O.N. REFER TO ELEVATIONS FOR WALL FINISHES.
2. ALL FLOORING TRANSITIONS AT DOOR OPENING TO OCCUR UNDERNEATH DOOR, U.O.N.
3. FLOOR FINISHES AND WALL BASE TO CONTINUE UNDER COUNTER TOPS, ANY MILLWORK OPENINGS.
4. ALL WOOD BASE TO BE PAINTED TO MATCH WALL ABOVE.
5. VERIFY FLOOR FINISH LAYOUT WITH ARCHITECT PRIOR TO INSTALLATION. (TILE LAYOUT, SEAMING DIAGRAMS, ETC.)
6. DOORS TO BE PAINTED PER DOOR SCHEDULE.
7. FRAMES TO BE PAINTED PER DOOR SCHEDULE.
8. ALL GWB SOFFITS TO BE PAINTED PT-01, U.O.N.
9. ALL EXISTING MILLWORK TO BE DEMOLISHED.
10. INTERIOR FINISHES SHALL COMPLY WITH NFPA 101, SECTION 10.2.

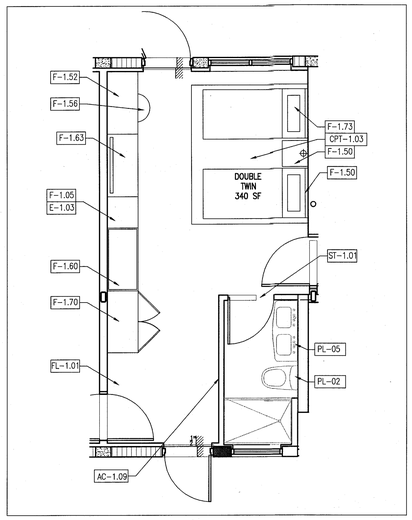

6 TYPE C3 FURNITURE PLAN – REF. UNIT C103 DOUBLE TWIN
SCALE: 1/4" = 1'-0"

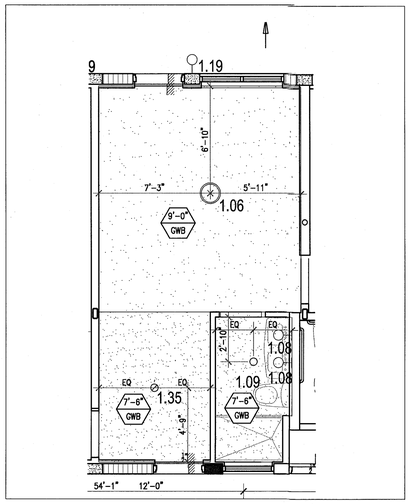

5 TYPE C3 REFLECTED CEILING PLAN – REF. UNIT C103
SCALE: 1/4" = 1'-0"

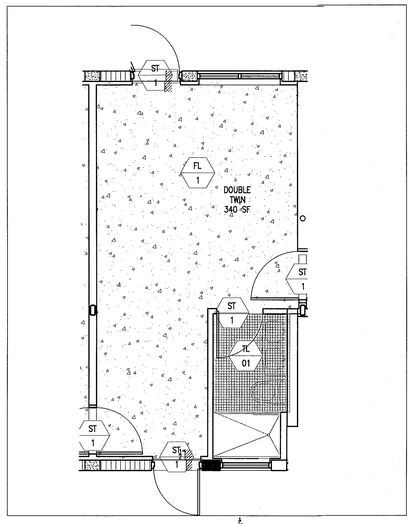

4 TYPE C3 FINISH PLAN – REF. UNIT C103
SCALE: 1/4" = 1'-0"

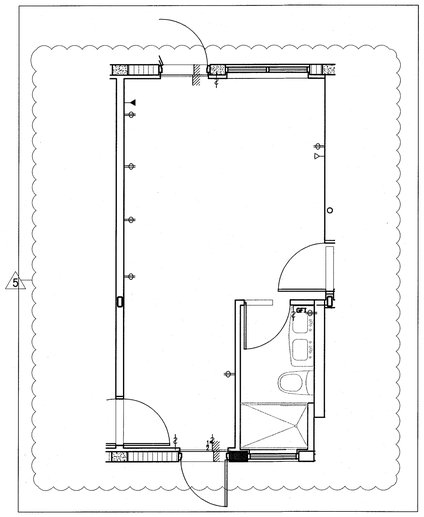

3 TYPE C3 POWER & SIGNAL PLAN – REF. UNIT C103
SCALE: 1/4" = 1'-0"

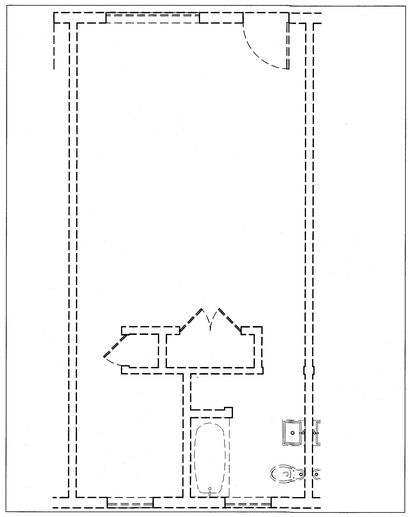

2 TYPE C3 DEMO PLAN – REF. UNIT C103
SCALE: 1/4" = 1'-0"

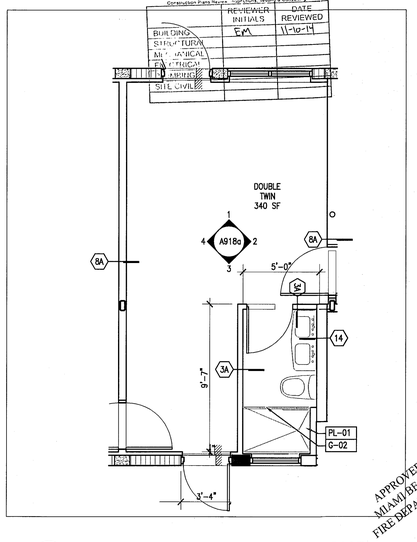

1 TYPE C3 FLOOR PLAN – REF. UNIT C103
SCALE: 1/4" = 1'-0"

APPROVED MIAMI BEACH FIRE DEPARTMENT

M T C I
PRIVATE PROVIDER SERVICES, LLC
Construction Plans Review, Inspections, Training & Consultants

	REVIEWER INITIALS	DATE REVIEWED
BUILDING	EM	11-10-14
STRUCTURAL		
MECHANICAL		
ELECTRICAL		
PLUMBING		
SITE CIVIL		

HADDON HALL
1500 COLLINS AVE
MIAMI BEACH, FL

KEYPLAN N.T.S.

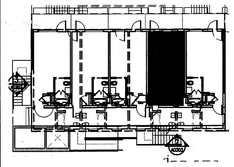

REVISIONS

NO.	DESCRIPTION	ISSUE DATE
4	FIRE REVIEW COMMENTS	04-01-2014
5	GUESTROOM COORDINATION	04-17-2014

100% CONSTRUCTION DOCUMENT SET

SEAL

5-22-14
Jonathan Cardello
Lic. # AR93391

ADD Inc Architecture Interiors Planning

One Biscayne Tower
Suite 1670
Two South
Biscayne Boulevard
Miami, Fl 33131
T. 305.482.8700
F. 305.482.8770
www.addinc.com
Lic. # AA26001507

Boston Miami

JOB NUMBER: 13036.00
CHECKED BY:
ISSUE DATE: FEBRUARY 18, 2014
SCALE: VARIES

SHEET TITLE

ENLARGED GUESTROOM PLANS TYPE C3

SHEET NUMBER

A918

COPYRIGHT ADD INC 2011

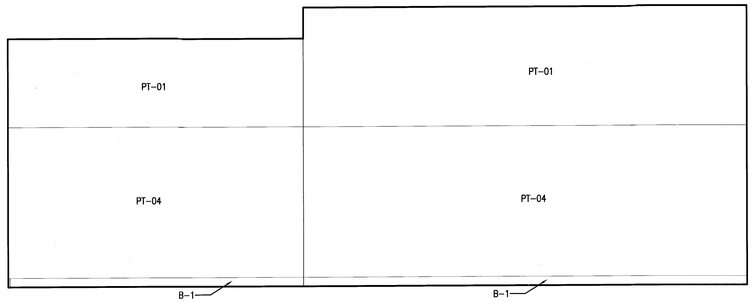

4 TYPE C3 UNIT C103 – ELEVATION WEST
SCALE: 1/2" = 1'-0"

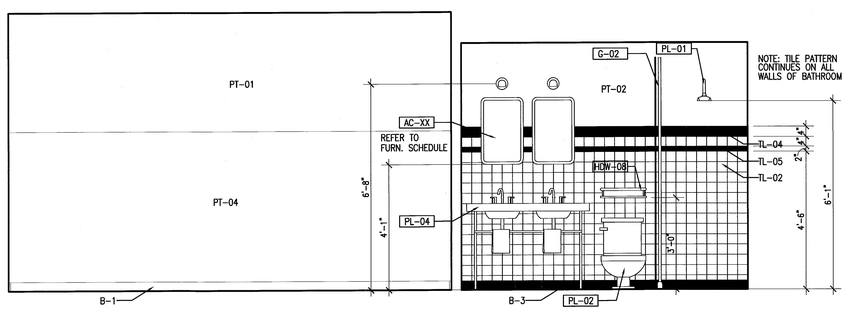

2 TYPE C3 UNIT C103 – ELEVATION EAST
SCALE: 1/2" = 1'-0"

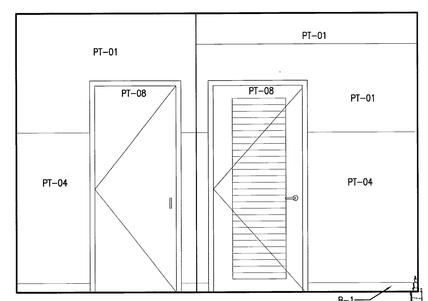

3 TYPE C3 UNIT C103 – ELEVATION SOUTH
SCALE: 1/2" = 1'-0"

	REVIEWER INITIALS	DATE REVIEWED
BUILDING	EM	11-10-14
STRUCTURAL		
MECHANICAL		
ELECTRICAL		
PLUMBING		
SITE CIVIL		

MTCI
PRIVATE PROVIDER SERVICES, LLC
Construction Plans Review, Inspections, Training & Consulting

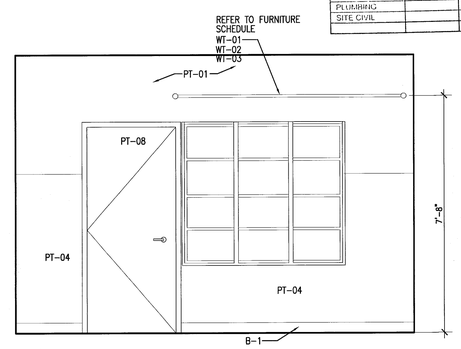

1 TYPE C3 UNIT C103 – ELEVATION NORTH
SCALE: 1/2" = 1'-0"

APPROVED
MIAMI BEACH
FIRE DEPARTMENT

HADDON HALL
1500 COLLINS AVE
MIAMI BEACH, FL

KEYPLAN N.T.S.

REVISIONS

NO.	DESCRIPTION	ISSUE DATE

PERMIT SET

SEAL

Jonathan Cardello
Lic. # AR93391

ADD Inc Architecture Interiors Planning

One Biscayne Tower
Suite 1670
Two South
Biscayne Boulevard
Miami, Fl 33131
T. 305.482.8700
F. 305.482.8770
www.addinc.com
Lic. # AA26001507

Boston Miami

JOB NUMBER: 13036.00
CHECKED BY:
ISSUE DATE: JANUARY 24, 2014
SCALE: VARIES

SHEET TITLE

ENLARGED GUESTROOM ELEVATIONS - TYPE C3

SHEET NUMBER

A918a

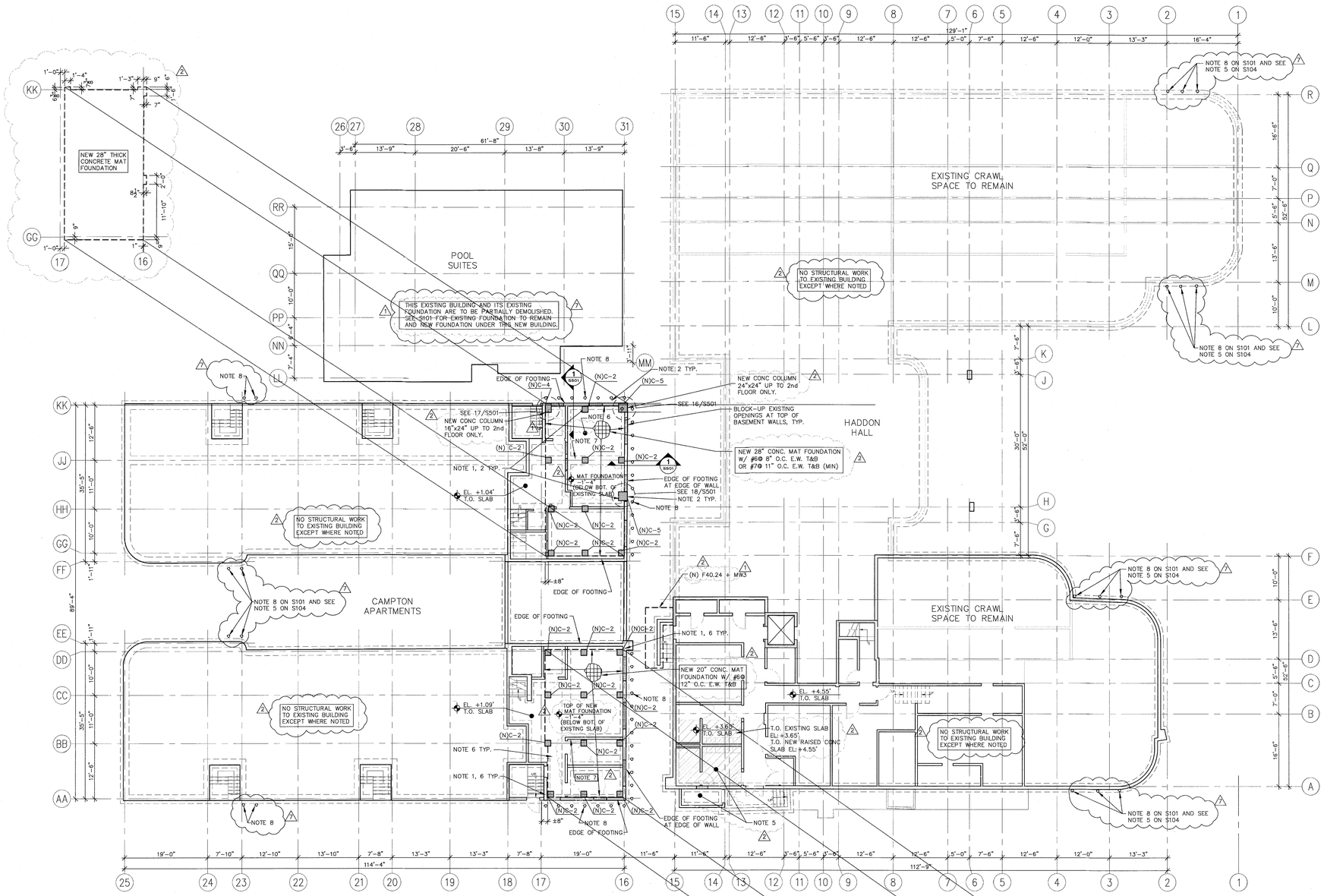

1 BASEMENT FOUNDATION PLAN

SCALE: 3/32" = 1'-0"

HELICAL PILE NOTES:

ALL HELICAL PILES SHOWN ARE HELICAP PILE SYSTEM INCLUDING 24" WIDE X 12" LONG MINIMUM BRACKETS BY MANUFACTURER RATED FOR 24 KIPS AXIAL COMPRESSION AND 8 KIPS AXIAL TENSION ALLOWABLE CAPACITY. HELICAL PILE MANUFACTURER TO PROVIDE DRAWINGS AND CALCULATIONS SIGNED AND SEALED BY A PROFESSIONAL ENGINEER REGISTERED IN THE STATE OF FLORIDA FOR ALL HELICAL PILE SYSTEM USED ON THIS PROJECT.

~~ALL PILE CAP HAVE W/C = 0.4, F'c = 6,000 PSI. @ 28 DAYS~~

NOTES:

1. GC TO INSTALL NEW HELICAL PILE WITH BRACKETS CAPABLE OF SUSTAINING 24KIPS ALOWABLE AXIAL COMPRESSION LOAD AT 3'-0" ON CENTER FROM EXTERIOR SIDE OF BASEMENT WALL FOUNDATION AND BRACE EXISTING BASEMENT WALL PRIOR TO CUTTING EXISTING SLAB TO INSTALL NEW FOUNDATIUON AND NEW COLUMNS.
2. GC TO EXCAVATE DOWN TO EXISTING FOUNDATION LEVEL TO BUILD NEW COLUMNS. AFTER INSTALLING NEW HELICAL PILES W/ BRACKETS (HPB) AT EXTERIOR, CUT 8" OF WIDTH FROM EXISTING 24" WIDE x 12" DEEP x CONTINUOUS FOUNDATION UNDER BASEMENT WALLS WHERE SHOWN TO INSTALL NEW HELICAL PILE CAP (HPC) FLUSH WITH INTERIOR FACE OF BASEMENT WALLS. PROVIDE EARTH AND STRUCTURE SHORING AS REQUIRED AND AS ENGINEERED BY A SHORING FLORIDA REGISTERED PROFESSIONAL ENGINEER (TYPICAL).
3. NEW C-4 AND C-5 COLUMN FROM NEW FOUNDATION UP TO 2ND FLOOR.
4. NEW C-2 COLUMN FROM NEW FOUNDATION UP TO GROUND FLOOR.
5. NEW 4" RAISED CONCRETE-SLAB-ON-GRADE WITH 6x6 W2.9xW2.9 WWF ON 10 MIL S BARRIER ON COMPACTED, TREATED SUB-SOIL ON TOP OF EXISTING SLAB TO REMAIN..
6. NEW CONCRETE SLAB INFILL AT LOCATIONS OF REMOVED SLAB FOR NEW COLUMN AND FOUNDATION INSTALLATION TO MATCH EXISTING BASEMENT CONCRETE SLAB. DOWEL AND EPOXY NEW SLAB INFILL BARS #5 @ 12" o.c. EACH WAY TOP & BOTT MIN. TO SURROUNDING EXISTING SLAB AND WALLS WITH HILTY HIT HY150 ADHESIVE SYSTEM AND 7.5 MINIMUM EMBEDMENT.
7. DEMOLISH INTERIOR CMU WALL AND ITS FOUNDATION ONLY AFTER SHORING BASEMENT WALLS AND REMOVING 1ST FLOOR FRAMING TO INSTALL NEW MAT FOUNDATION.
8. NEW HELICAL PILE SYSTEM @ 3'-0" ON CENTER WITH BRACKET BY MANUFACTURER RATED FOR 24 KIPS ALLOWABLE AXIAL COMPRESSION LOAD ADDED UNDER EXISTING FOUNDATION TO REINFORCE EXISTING FOUNDATION BEARING CAPACITY.
9. ALL ELEVATIONS ARE N.G.V.D. UNLESS OTHERWISE (U.N.O.)

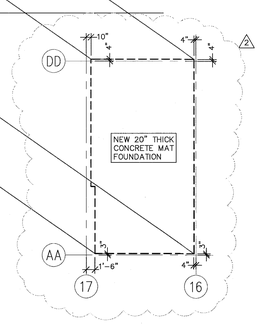

Structural Drawing Updated 1-14-14
Based on Architectural Backgrounds Dated 1-9-14

5-5-14
FREDERIC CARRIE
P.E. FLORIDA
REG. #90791

PERMIT SET
1/24/14

THESE ARE PROGRESS DRAWINGS, THEREFORE THEY ARE ISSUED PRIOR TO COMPLETION OF THE STRUCTURAL DESIGN, AND OTHER DESIGN DISCIPLINES, INCLUDING BUT NOT LIMITED TO ARCHITECTURAL OR MECHANICAL DESIGNS; AND AS SUCH, ARE INCOMPLETE BY NATURE FOR THE COMPREHENSIVE SCOPE OF THE PROJECT. ALLOWANCES FOR STRUCTURAL ELEMENTS REQUIRED DUE TO THE COMPLETION AND CROSS-COORDINATION OF ALL OTHER DISCIPLINES SHOULD BE MADE.

ONM&J
O'Donnell, Naccarato, Mignogna & Jackson
STRUCTURAL ENGINEERS
321 15TH STREET, SUITE 200
WEST PALM BEACH, FLORIDA 33401
(561) 835-9994 FAX (561) 835-8255
LIC. #00004386
JOB # 665.073

HADDON HALL
1500 COLLINS AVE

MIAMI BEACH, FL

KEYPLAN N.T.S.

REVISIONS

NO.	DESCRIPTION	ISSUE DATE
1	PROGRESS TO 100% CD	2/7/14
2	PERMIT REVIEW COMMENTS	3/14/14
3	POOL SUITES WALLS	4/4/14

PERMIT SET

NORTH SEAL

Jonathan Cardello
Lic. # AR93391

ADD Inc Architecture Interiors Planning

One Biscayne Tower
Suite 1670
Two South
Biscayne Boulevard
Miami, Fl 33131
T. 305.482.8700
F. 305.482.8770
www.addinc.com
Lic. # AA26001507

Boston Miami

MTGI PRIVATE PROVIDER SERVICES, LLC
Construction Plans Review, Inspections, Permits & Consulting

	REVIEWER INITIALS	DATE REVIEWED
BUILDING		
STRUCTURAL	CMC	11/10/14
MECHANICAL		
ELECTRICAL		
PLUMBING		
SITE CIVIL		

JOB NUMBER:	13036.00
CHECKED BY:	
ISSUE DATE:	JANUARY 24, 2014
SCALE:	3/32" = 1'-0"

SHEET TITLE

BASEMENT FOUNDATION PLAN

SHEET NUMBER

S100

COPYRIGHT ADD INC 2011

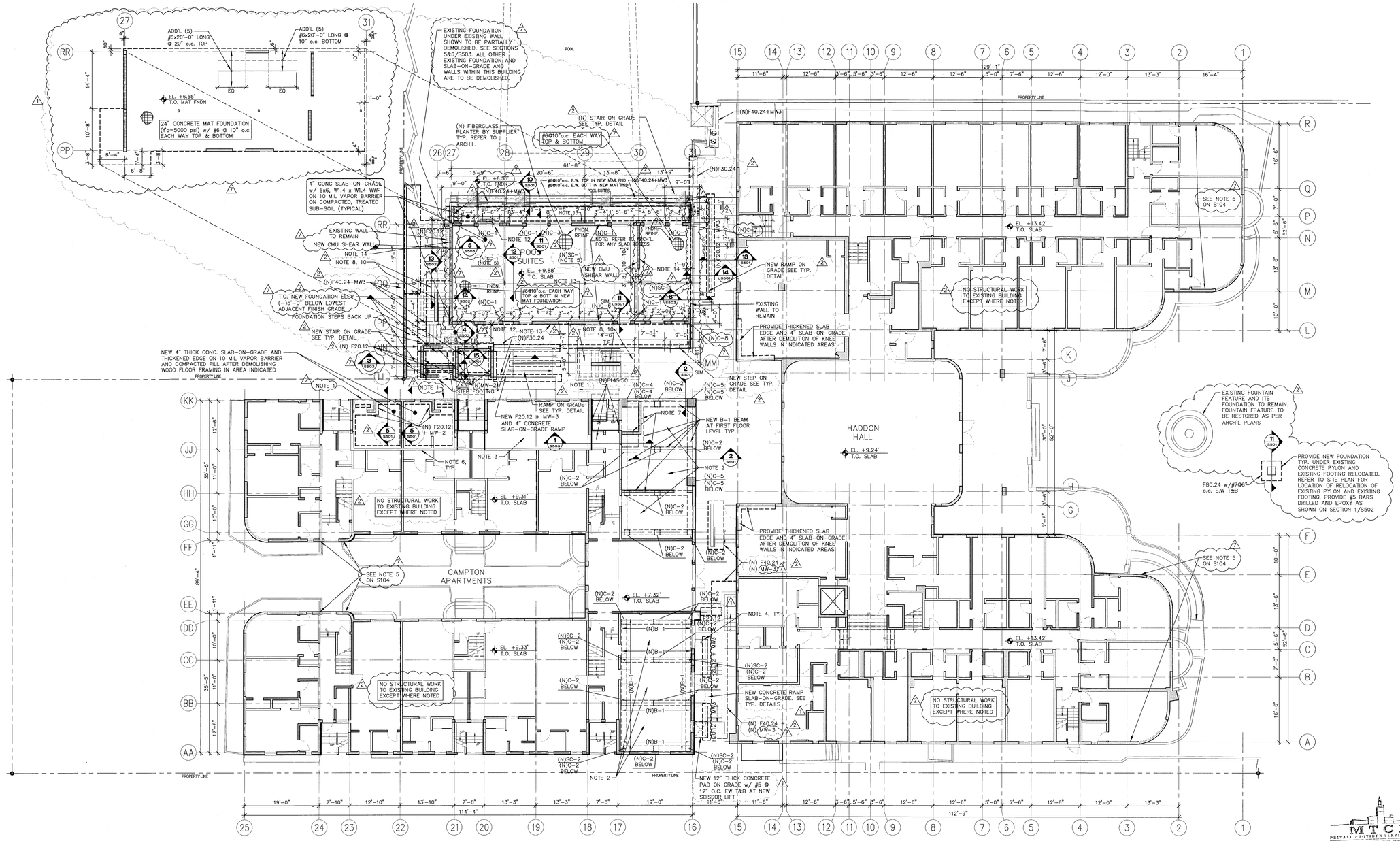

1 FIRST FLOOR PLAN
SCALE: 3/32" = 1'-0"

NOTES:

1. NEW OPENING IN EXISTING CMU LOAD BEARING WALL AT NEW DOOR. PROVIDE NEW STEEL DOUBLE CHANNEL, PLATE AND BOLT SHORING SYSTEM PRIOR TO CUTTING OPENING. PROVIDE NEW CONCRETE LINTEL BEAM ABOVE NEW OPENING.
2. SHORE EXISTING BASEMENT RETAINING WALLS. THEN, REMOVE EXISTING WOOD FLOOR FRAMING. THEN PROVIDE NEW 6" THICK CONCRETE SLAB WITH #6 @ 12" O.C. E.W. T&B, W/C =0.4, F'c = 6,000 PSI @ 28 DAYS SPANNING BETWEEN NEW CONCRETE BEAMS. CANTILEVER SLAB OUT TO EXISTING BASEMENT WALLS WHERE REQUIRED WITH SAME REINFORCING SPECIFIED. DOWEL TOP AND BOTTOM BARS 6.75" INTO EXISTING WALLS WITH HILTI HIT HY150.
3. ADD NEW (2) 2X10 SP NO. 2 GRADE JOISTS @ 16" O.C. TO REINFORCE EXISTING FLOOR FRAMING UNDER NEW GYM ROOM AREA. PROVIDE (2) SIMPSON HGA10 CONNECTIONS AT EACH ENDS TO EXISTING CMU BEARING WALLS/ BEARING STEM WALLS.
4. INFILL EXISTING BASEMENT WALL SIDELITE OPENINGS WITH NEW MW-2 WALLS AND EPOXY WITH HILTI HIT HY 150 ADHESIVE SYSTEM WITH 8" MIN. EMBED TO EXISTING FILLED CELLS. IF ADJACENT SURROUNDING CELLS ARE NOT FILLED, GROUT FILL FIRST ROW/COLUMN CELLS ONLY.
5. PROVIDE NEW 12"X12"X1.25" THICK CAP AND BASE PLATE W/ (4) 1/2" X 5" LG H.S. AT ELEVATED SLABS PROVIDE NEW 12"X12"X1" BASE PLATE AT FOUNDATION W/ (4) 1" DIAMETER X 16" LG A307 THREADED BOLT W/ 2"X2"X3/4" PLATE AND DOUBLE NUTS AT END OF BOLTS.
6. EXISTING BEARING WALL/BEARING STEM WALLS TO REMAIN ON TOP OF EXISTING 24" WIDE X 12" THICK FOUNDATION TYPICAL U.N.O.
7. NEW CMU MW-1.
8. 8" THICK STAIR SLAB THICKNESS PLUS RISER W/ #4@6"O.C. E.W. T&B AT STAIR SLAB AND LANDING. HOOK ALL STAIR STAIR SLAB AND LANDING REBAR INTO CONCRETE WALL AND CONCRETE BEAMS. PROVIDE 6" THICK CONCRETE WALLS AT EDGES W/ #4 @ 6" O.C. MID VERTICAL HOOKED INTO STAIR SLAB AND #4 @ 12" O.C. HORIZONTAL.
9. 10" THICK CONCRETE WALL W/ #5@ 8" O.C. EACH FACE VERTICAL, #4@ 16" O.C. EACH FACE HORIZONTAL.
10. PRIOR TO CUTTING HOLE IN EXISTING CMU, CUT CMU AT NEW JAMB ONLY FIRST AND PROVIDE NEW C-7 CONCRETE COLUMN FROM FOUNDATION UP TO TOP OF NEW OPENING. THEN PROVIDE INFORMATION AS PER SECTION 2/S503.
11. PROVIDE NEW MW-3 WALLS AT ALL CMU NOT TAGGED ON PLAN. GROUT ALL CELLS SOLID BELOW GRADE.
12. PROVIDE NEW MW-3 TYPICAL ALONG THIS WALL U.N.O. FROM FNDN TO ROOF.
13. PROVIDE NEW 8" CONCRETE SHEARWALL (FNDN TO TOP OF ROOF) W/ #7 @ 6" O.C. VERTICAL E.F. AND #3@ 8" O.C. HORIZONTAL E.F.
14. PROVIDE NEW MW-3 FOR 6 FEET FROM EACH END OF THIS WALL FROM FNDN TO ROOF AND PROVIDE NEW MW-5 AT BALANCE FROM FNDN TO ROOF.
15. ALL NEW FOUNDATIONS TO BE 1'-6" BELOW FINISHED GRADE UNLESS NOTED OTHERWISE.

REVISIONS

NO.	DESCRIPTION	ISSUE DATE
1	PROGRESS TO 100% CD	2/7/14
2	PERMIT REVIEW COMMENTS	3/14/14
3	POOL SUITES WALLS	4/4/14

PERMIT SET

NORTH SEAL

Jonathan Cardello
Lic. # AR93391

ADD Inc Architecture Interiors Planning

One Biscayne Tower
Suite 1670
Two South
Biscayne Boulevard
Miami, Fl 33131
T. 305.482.8700
F. 305.482.8770
www.addinc.com
Lic. # AA26001507

Boston Miami

	REVIEWER INITIALS	DATE REVIEWED
BUILDING		
STRUCTURAL	MC	1/16/14
MECHANICAL		
ELECTRICAL		
PLUMBING		
SITE CIVIL		

JOB NUMBER: 13036.00
CHECKED BY:
ISSUE DATE: JANUARY 24, 2014
SCALE: 3/32" = 1'-0"

SHEET TITLE

FIRST FLOOR PLAN

PERMIT SET
1/24/14

THESE ARE PROGRESS DRAWINGS, THEREFORE THEY ARE ISSUED PRIOR TO COMPLETION OF THE STRUCTURAL DESIGN, AND OTHER DESIGN DISCIPLINES, INCLUDING BUT NOT LIMITED TO ARCHITECTURAL OR MECHANICAL DESIGNS; AND AS SUCH, ARE INCOMPLETE BY NATURE FOR THE COMPREHENSIVE SCOPE OF THE PROJECT. ALLOWANCES FOR STRUCTURAL ELEMENTS REQUIRED DUE TO THE COMPLETION AND CROSS-COORDINATION OF ALL OTHER DISCIPLINES SHOULD BE MADE

Structural Drawing Updated 1-27-14
Based on Architectural Backgrounds Dated 1-22-14

5-5-14
FREDERIC CARRIE
P.E. FLORIDA
REG. #60701

O'Donnell, Naccarato, Mignogna & Jackson
STRUCTURAL ENGINEERS
331 15TH STREET, SUITE 200
WEST PALM BEACH, FLORIDA 33401
(561) 835-9994 FAX (561) 835-8255
LIC. #0004386
JOB # 665.073

SHEET NUMBER

S101

COPYRIGHT ADD INC 2011

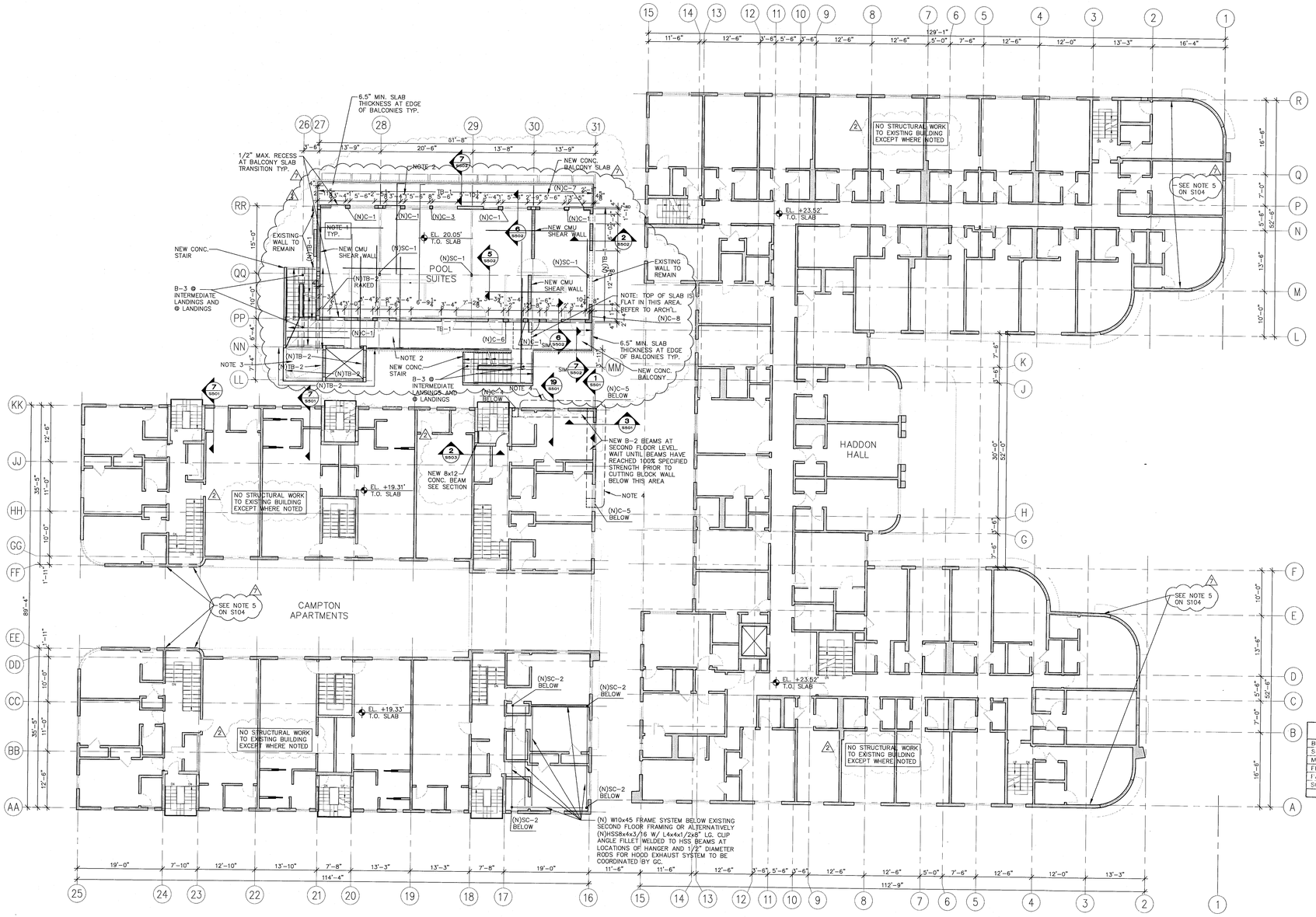

1 SECOND FLOOR FRAMING PLAN
SCALE: 3/32" = 1'-0"

NOTES:

1. NEW 8" THICK CONCRETE SLAB W/ #5@12" O.C. E.W. T&B. AT ALL BALCONIES, PROVIDE #5@12" O.C. TOP BARS RUNNING NORTH-SOUTH AND #4@8" O.C. TOP BARS RUNNING EAST-WEST AND #4@6" O.C. BOTTOM BARS EACH WAY. EXTEND ALL NORTH-SOUTH #5 TOP BARS OF BALCONIES 17' INTO INTERIOR SLAB. EXTEND BOTTOM BAR 4' INTO INTERIOR SLAB. REFER TO NOTE 2 FOR REINFORCING BAR PROTECTION IN BALCONIES.
2. REFER TO ARCH'L FOR SLOPING AT TOP OF SLAB AT BALCONIES/WALKWAYS TYP. ALL BALCONY AND EXPOSED SLABS SHALL HAVE GALVANIZED REINFORCING BARS AND CONCRETE PROTECTION AS PER CONCRETE STRUCTURAL NOTE 9D ON S401.
3. NEW 6" THICK CONCRETE SLAB W/ #5 @ 12" O.C. E.W. T&B, WITH 8" THICK x 10" TALL CONCRETE CURB WITH 2#5 AT TOP AND MID.
4. NEW 6" THICK CONCRETE EYEBROW W/ #4 @ 12" O.C. E.W. T&B.

Structural Drawing Updated 1-27-14
Based on Architectural Backgrounds Dated 1-22-14

5-5-14
FREDERIC CARRIE
P.E. FLORIDA
REG. #60791

PERMIT SET
1/24/14

THESE ARE PROGRESS DRAWINGS, THEREFORE THEY ARE ISSUED PRIOR TO COMPLETION OF THE STRUCTURAL DESIGN, AND OTHER DESIGN DISCIPLINES, INCLUDING BUT NOT LIMITED TO ARCHITECTURAL OR MECHANICAL DESIGNS, AND AS SUCH, ARE INCOMPLETE BY NATURE FOR THE COMPREHENSIVE SCOPE OF THE PROJECT. ALLOWANCES FOR STRUCTURAL ELEMENTS REQUIRED DUE TO THE COMPLETION AND CROSS-COORDINATION OF ALL OTHER DISCIPLINES SHOULD BE MADE.

ONMJ
O'Donnell, Naccarato, Mignogna & Jackson
STRUCTURAL ENGINEERS
231 15TH STREET, SUITE 200
WEST PALM BEACH, FLORIDA 33401
(561) 835 - 9994 FAX (561) 835 - 8255
LIC. #0004386
JOB # 665.073

HADDON HALL
1500 COLLINS AVE
MIAMI BEACH, FL

KEYPLAN N.T.S.

REVISIONS

NO.	DESCRIPTION	ISSUE DATE
1	PROGRESS TO 100% CD	2/7/14
2	PERMIT REVIEW COMMENTS	3/14/14
3	POOL SUITES WALLS	4/4/14

PERMIT SET

NORTH SEAL

Jonathan Cardello
Lic. # AR93391

ADD Inc Architecture Interiors Planning

One Biscayne Tower
Suite 1670
Two South
Biscayne Boulevard
Miami, Fl 33131
T. 305.482.8700
F. 305.482.8770
www.addinc.com
Lic. # AA26001507

Boston Miami

MGCY PRIVATE PROVIDER SERVICES, LLC
Construction Plans Review, Inspections, Testing & Consulting

	REVIEWER INITIALS	DATE REVIEWED
BUILDING		
STRUCTURAL	OMC	1/16/14
MECHANICAL		
ELECTRICAL		
PLUMBING		
SITE CIVIL		

JOB NUMBER: 13036.00
CHECKED BY:
ISSUE DATE: JANUARY 24, 2014
SCALE: 3/32" = 1'-0"

SHEET TITLE

SECOND FLOOR FRAMING PLAN

SHEET NUMBER

S102

COPYRIGHT ADD INC 2011

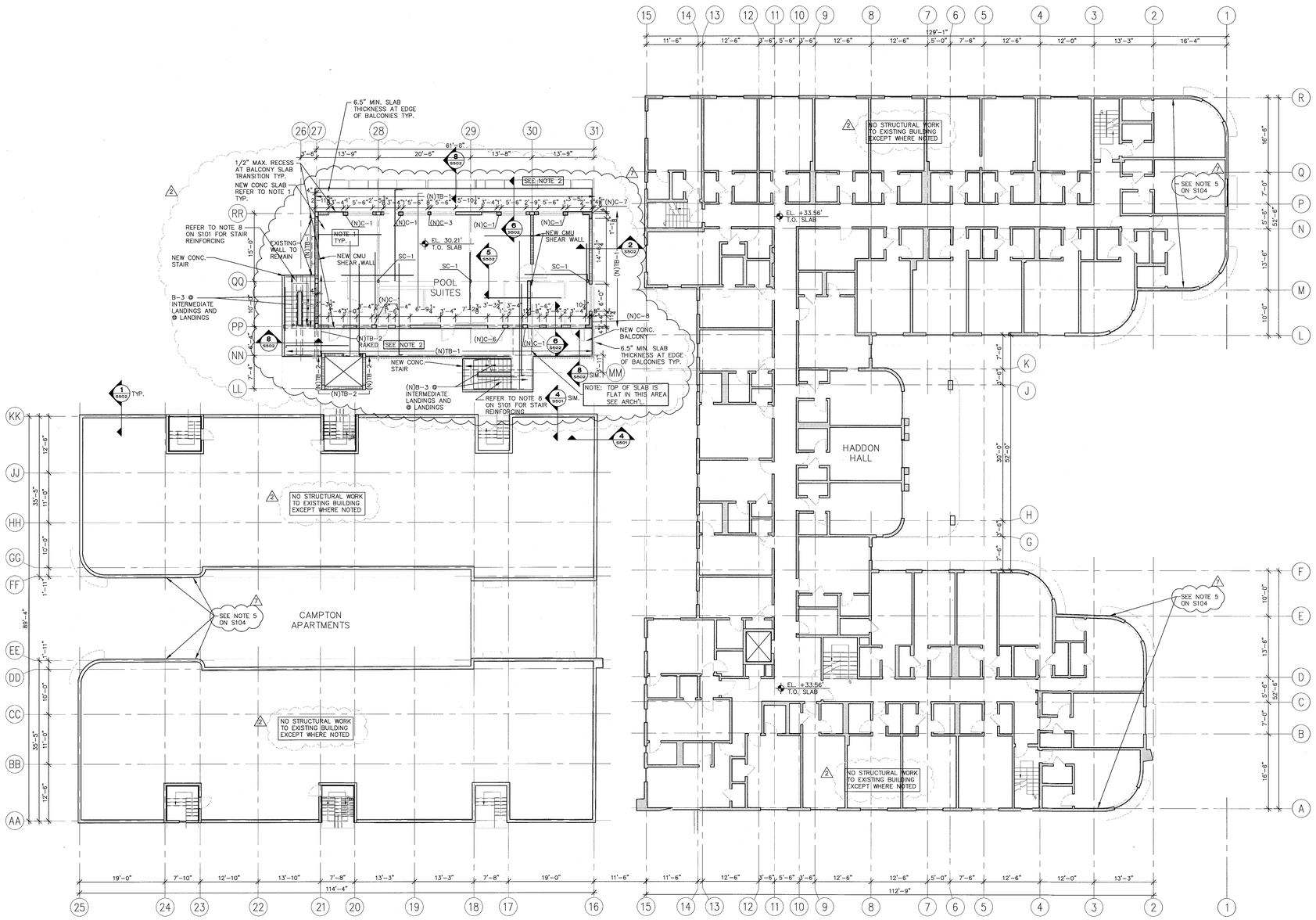

1 THIRD FLOOR FRAMING PLAN
SCALE: 3/32" = 1'-0"

NOTES:
1. NEW 8" THICK CONCRETE SLAB W/ #5@12" O.C. E.W. T&B. AT ALL BALCONIES, PROVIDE #5@12" O.C. TOP BARS RUNNING NORTH-SOUTH AND #4@6" O.C. TOP BARS RUNNING EAST-WEST AND #4@6" O.C. BOTTOM BARS EACH WAY. EXTEND ALL NORTH-SOUTH #5 TOP BARS OF BALCONIES 17' INTO INTERIOR SLAB. EXTEND BOTTOM BAR 4' INTO INTERIOR SLAB. REFER TO NOTE 2 FOR REINFORCING BAR PROTECTION IN BALCONIES.
2. REFER TO ARCH'L FOR SLOPING AT TOP OF SLAB AT BALCONIES/WALKWAYS TYP. ALL BALCONY AND EXPOSED SLABS SHALL HAVE GALVANIZED REINFORCING BARS AND CONCRETE PROTECTION AS PER CONCRETE STRUCTURAL NOTE 9D ON S401.

Structural Drawing Updated 1-27-14
Based on Architectural Backgrounds Dated 1-22-14

PERMIT SET
1/24/14

THESE ARE PROGRESS DRAWINGS, THEREFORE THEY ARE ISSUED PRIOR TO COMPLETION OF THE STRUCTURAL DESIGN, AND OTHER DESIGN DISCIPLINES, INCLUDING BUT NOT LIMITED TO ARCHITECTURAL OR MECHANICAL DESIGNS; AND AS SUCH, ARE INCOMPLETE BY NATURE FOR THE COMPREHENSIVE SCOPE OF THE PROJECT. ALLOWANCES FOR STRUCTURAL ELEMENTS REQUIRED DUE TO THE COMPLETION AND CROSS-COORDINATION OF ALL OTHER DISCIPLINES SHOULD BE MADE.

5-5-14
FREDERIC CARRIE
P.E. FLORIDA
REG. #60791

O'Donnell, Naccarato, Mignogna & Jackson
STRUCTURAL ENGINEERS
321 15TH STREET, SUITE 200
WEST PALM BEACH, FLORIDA 33401
(561) 835 - 9994 FAX (561) 835 - 8255
LIC. #00043866
JOB # 665.073

HADDON HALL
1500 COLLINS AVE
MIAMI BEACH, FL

KEYPLAN N.T.S.

REVISIONS

NO.	DESCRIPTION	ISSUE DATE
1	PROGRESS TO 100% CD	2/7/14
2	PERMIT REVIEW COMMENTS	3/14/14
3	POOL SUITES WALLS	4/4/14

PERMIT SET

NORTH SEAL

Jonathan Cardello
Lic. # AR93391

ADD Inc Architecture Interiors Planning
One Biscayne Tower
Suite 1670
Two South
Biscayne Boulevard
Miami, Fl 33131
T. 305.482.8700
F. 305.482.8770
www.addinc.com
Lic. # AA26001507
Boston Miami

MTCI PRIVATE PROVIDER SERVICES, LLC
Construction Plans Review - Inspections, Training & Consulting

	REVIEWER INITIALS	DATE REVIEWED
BUILDING		
STRUCTURAL	OMC	11/10/14
MECHANICAL		
ELECTRICAL		
PLUMBING		
SITE CIVIL		

JOB NUMBER:	13036.00
CHECKED BY:	
ISSUE DATE:	JANUARY 24, 2014
SCALE:	3/32" = 1'-0"

SHEET TITLE

THIRD FLOOR FRAMING PLAN

SHEET NUMBER

S103

COPYRIGHT ADD INC 2011

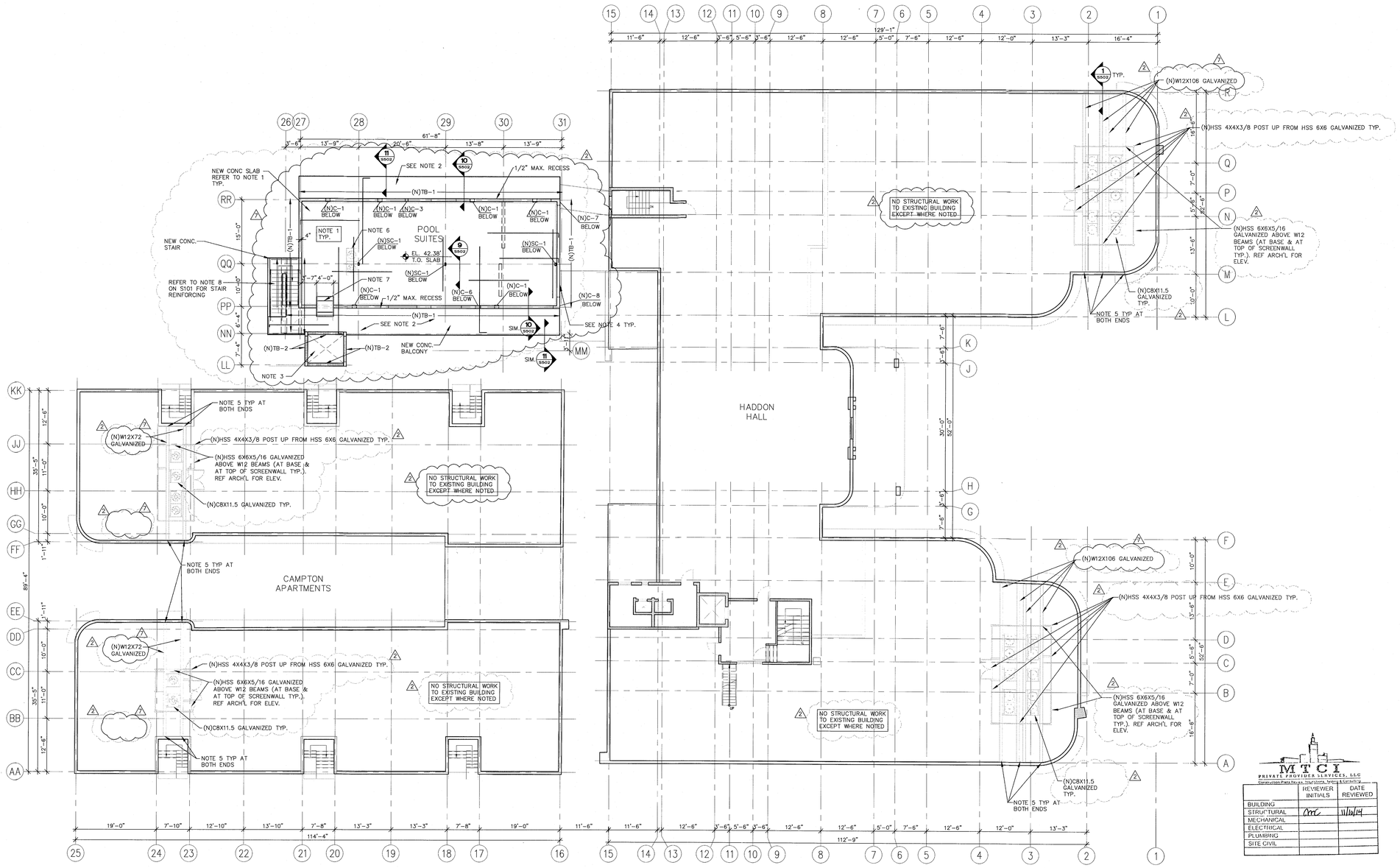

1 ROOF FRAMING PLAN

SCALE: 3/32" = 1'-0"

NOTES:

1. NEW 8" THICK CONCRETE SLAB W/ #5@12" O.C. E.W. T&B. AT ALL BALCONIES, PROVIDE #5@ 12" O.C. TOP BARS RUNNING NORTH-SOUTH AND #4@8" O.C. TOP BARS RUNNING EAST-WEST AND #4@8" O.C. BOTTOM BARS EACH WAY. EXTEND ALL NORTH-SOUTH #7 TOP BARS OF BALCONIES 17' INTO INTERIOR SLAB. EXTEND BOTTOM BAR 4' INTO INTERIOR SLAB. REFER TO NOTE 2 FOR REINFORCING BAR PROTECTION IN BALCONIES.
2. REFER TO ARCH'L FOR SLOPING AT TOP OF SLAB AT BALCONIES/WALKWAYS TYP. ALL BALCONY AND EXPOSED SLABS SHALL HAVE GALVANIZED REINFORCING BARS AND CONCRETE PROTECTION AS PER CONCRETE STRUCTURAL NOTE 9D ON S401.
3. NEW 6" THICK CONCRETE SLAB W/ #5 @ 12" O.C. E.W. T&B. AT TOP OF ELEVATOR.
4. PROVIDE NEW MW-2 PARAPET WITH BB-2 AT TOP TYP.
5. BREAK EXTERIOR FACE SHELL OF EXISTING CMU AND PROVIDE #5 VERTICAL DOWN TO TOP OF FOUNDATION UNDER EACH W12 BEAMS CONNECTION ANGLES. EMBED NEW #5 VERTICAL BARS 7" INTO EXISTING FOUNDATION WITH HILTI HIT HY150 ADHESIVE SYSTEM. GROUT CELLS SOLID AND APPLY STUCCO AS SPECIFIED IN ARCH'L.
6. NEW ROOF TOP UNIT WITH CURB BY SUPPLIER. PROVIDE AT 1 FOOT FROM EACH ENDS OF EACH RTU (2) L4X4X1/4X12" LG CLIP (8 CLIPS PER RTU) EACH W/ (2) 3/4" DIAM. BOLT SPACED 10" APART W/ HILTI HIT HY150 ADHESIVE SYSTEM W/ 6.75" EMBED INTO CONCRETE SLAB. PROVIDE (1) 4" WIDE 14GA METAL STRAP WELDED TO EACH CLIP ANGLES AND WRAPPING AROUND RTU (2 STRAPS PER RTU SIDES, 4 STRAPS TOTAL).
7. NEW PREFABRICATED METAL STAIR BY SUPPLIER. REFER TO ARCH'L PLANS.

Structural Drawing Updated 1-27-14
Based on Architectural Backgrounds Dated 1-22-14

5-5-14
FREDERIC CARRIE
P.E. FLORIDA
REG. #60791

PERMIT SET
1/24/14

THESE ARE PROGRESS DRAWINGS, THEREFORE THEY ARE ISSUED PRIOR TO COMPLETION OF THE STRUCTURAL DESIGN, AND OTHER DESIGN DISCIPLINES, INCLUDING BUT NOT LIMITED TO ARCHITECTURAL OR MECHANICAL DESIGNS, AND AS SUCH, ARE INCOMPLETE BY NATURE FOR THE COMPREHENSIVE SCOPE OF THE PROJECT. ALLOWANCES FOR STRUCTURAL ELEMENTS REQUIRED DUE TO THE COMPLETION AND CROSS-COORDINATION OF ALL OTHER DISCIPLINES SHOULD BE MADE.

ONM&J
O'Donnell, Naccarato, Mignogna & Jackson
STRUCTURAL ENGINEERS
331 15TH STREET, SUITE 200
WEST PALM BEACH, FLORIDA 33401
(561) 835-9994 FAX (561) 835-8255
LIC. #0004386
JOB # 665.073

HADDON HALL
1500 COLLINS AVE

MIAMI BEACH, FL

KEYPLAN N.T.S.

REVISIONS

NO.	DESCRIPTION	ISSUE DATE
1	PROGRESS TO 100% CD	2/7/14
2	PERMIT REVIEW COMMENTS	3/14/14
3	POOL SUITES WALLS	4/4/14

PERMIT SET

NORTH SEAL

Jonathan Cardello
Lic. # AR93391

ADD Inc Architecture Interiors Planning

One Biscayne Tower
Suite 1670
Two South
Biscayne Boulevard
Miami, Fl 33131
T. 305.482.8700
F. 305.482.8770
www.addinc.com
Lic. # AA26001507

Boston Miami

MTCY PRIVATE PROVIDER SERVICES, LLC
Construction Plans Review, Inspections, Testing & Consulting

	REVIEWER INITIALS	DATE REVIEWED
BUILDING		
STRUCTURAL	[illegible]	11/10/14
MECHANICAL		
ELECTRICAL		
PLUMBING		
SITE CIVIL		

JOB NUMBER:	13036.00
CHECKED BY:	
ISSUE DATE:	JANUARY 24, 2014
SCALE:	3/32" = 1'-0"

SHEET TITLE

ROOF FRAMING PLAN

SHEET NUMBER

S104

COPYRIGHT ADD INC 2011

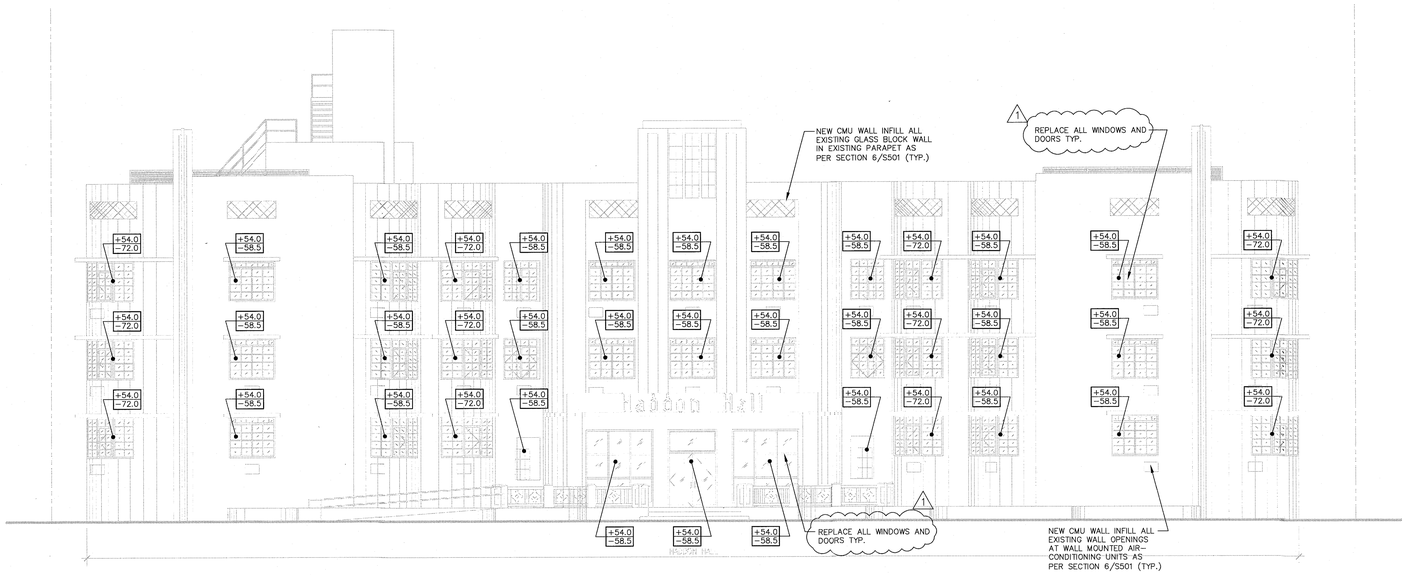

1 EXTERIOR EAST HADDON HALL FACADE

SCALE: 1/8" = 1'-0"

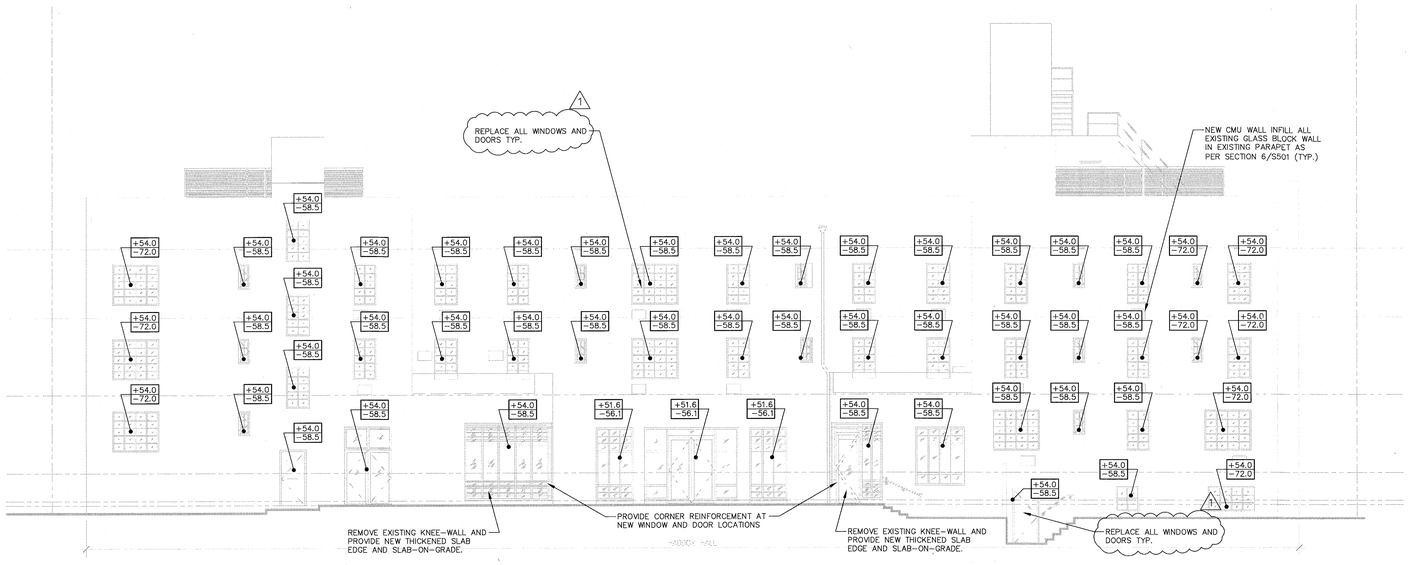

2 EXTERIOR WEST HADDON HALL FACADE

SCALE: 1/8" = 1'-0"

	= ALLOWABLE PRESSURE IN PSF
−	= ALLOWABLE SUCTION IN PSF

Kd = 0.85 INCLUDED
EXPOSURE D
Vasd = 139 MPH

MTCI
PRIVATE PROVIDER SERVICES, LLC
Construction Plans Review, Inspections, Training & Consulting

	REVIEWER INITIALS	DATE REVIEWED
BUILDING		
STRUCTURAL	CM	1/16/14
MECHANICAL		
ELECTRICAL		
PLUMBING		
SITE CIVIL		

PERMIT SET
1/24/14

THESE ARE PROGRESS DRAWINGS, THEREFORE THEY ARE ISSUED PRIOR TO COMPLETION OF THE STRUCTURAL DESIGN, AND OTHER DESIGN DISCIPLINES. INCLUDING BUT NOT LIMITED TO ARCHITECTURAL OR MECHANICAL DESIGNS; AND AS SUCH, ARE INCOMPLETE BY NATURE FOR THE COMPREHENSIVE SCOPE OF THE PROJECT. ALLOWANCES FOR STRUCTURAL ELEMENTS REQUIRED DUE TO THE COMPLETION AND CROSS-COORDINATION OF ALL OTHER DISCIPLINES SHOULD BE MADE.

Structural Drawing Updated 1-27-14
Based on Architectural Backgrounds Dated 1-22-14

5-5-14
FREDERIC CARRIE
P.E. FLORIDA
REG. #60791

ONMJ
O'Donnell, Naccarato, Mignogna & Jackson
STRUCTURAL ENGINEERS
321 15TH STREET, SUITE 200
WEST PALM BEACH, FLORIDA 33401
(561) 835-9994 FAX (561) 835-8255
LIC. #0004386
JOB # 665.073

HADDON HALL
1500 COLLINS AVE

MIAMI BEACH, FL

KEYPLAN N.T.S.

REVISIONS

NO.	DESCRIPTION	ISSUE DATE
1	PROGRESS TO 100% CD	2/7/14
2	PERMIT REVIEW COMMENTS	3/14/14

PERMIT SET

NORTH SEAL

Jonathan Cardello
Lic. # AR93391

ADD Inc Architecture Interiors Planning

One Biscayne Tower
Suite 1670
Two South
Biscayne Boulevard
Miami, Fl 33131
T. 305.482.8700
F. 305.482.8770
www.addinc.com
Lic. # AA26001507

Boston Miami

JOB NUMBER:	13036.00
CHECKED BY:	
ISSUE DATE:	JANUARY 24, 2014
SCALE:	1/8" = 1'-0"

SHEET TITLE

EXTERIOR ELEVATIONS

SHEET NUMBER

S301

COPYRIGHT ADD INC 2011

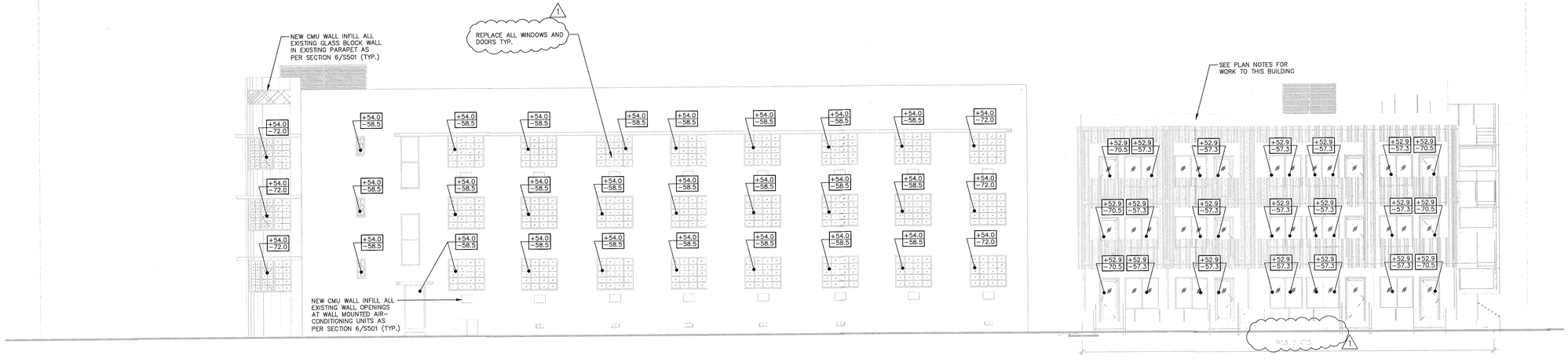

1 EXTERIOR NORTH HADDON HALL AND POOL SUITES ELEVATION

SCALE: 1/8" = 1'-0"

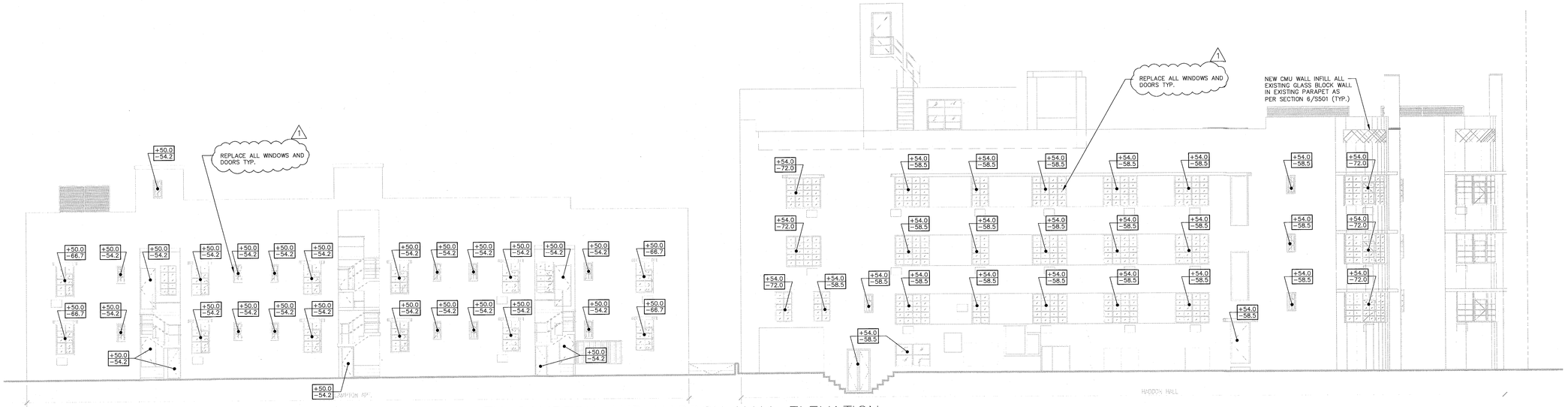

2 EXTERIOR SOUTH CAMPTON AND HADDON HALL ELEVATION

SCALE: 1/8" = 1'-0"

3 EXTERIOR SOUTH POOL SUITES ELEVATION

SCALE: 1/8" = 1'-0"

+ = ALLOWABLE PRESSURE IN PSF
− = ALLOWABLE SUCTION IN PSF
Kd = 0.85 INCLUDED
EXPOSURE D
Vasd = 139 MPH

MICI PRIVATE PROVIDER, INC. FL, LLC
Certificate Plans Review

	REVIEWED	DATE REVIEWED
BUILDING		
STRUCTURAL	CHC	1/16/14
MECHANICAL		
ELECTRICAL		
PLUMBING		

PERMIT SET
1/24/14

THESE ARE PROGRESS DRAWINGS, THEREFORE THEY ARE ISSUED PRIOR TO COMPLETION OF THE STRUCTURAL DESIGN, AND OTHER DESIGN DISCIPLINES. INCLUDING BUT NOT LIMITED TO ARCHITECTURAL OR MECHANICAL DESIGNS; AND AS SUCH, ARE INCOMPLETE BY NATURE FOR THE COMPREHENSIVE SCOPE OF THE PROJECT. ALLOWANCES FOR STRUCTURAL ELEMENTS REQUIRED DUE TO THE COMPLETION AND CROSS-COORDINATION OF ALL OTHER DISCIPLINES SHOULD BE MADE.

Structural Drawing Updated 1-27-14
Based on Architectural Backgrounds Dated 1-22-14

5-5-14
FREDERIC CARRIE
P.E. FLORIDA
REG. #60701

ONMJ&J
O'Donnell, Naccarato, Mignogna & Jackson
STRUCTURAL ENGINEERS
221 15TH STREET, SUITE 200
WEST PALM BEACH, FLORIDA 33401
(561) 835 - 9994 FAX (561) 835 - 8255
LIC. #0004366
JOB # 665.073

HADDON HALL
1500 COLLINS AVE

MIAMI BEACH, FL

KEYPLAN N.T.S.

REVISIONS

NO.	DESCRIPTION	ISSUE DATE
1	PROGRESS TO 100% CD	2/7/14
2	PERMIT REVIEW COMMENTS	3/14/14

PERMIT SET

NORTH SEAL

Jonathan Cardello
Lic. # AR93391

ADD Inc Architecture Interiors Planning

One Biscayne Tower
Suite 1670
Two South
Biscayne Boulevard
Miami, Fl 33131
T. 305.482.8700
F. 305.482.8770
www.addinc.com
Lic. # AA26001507

Boston Miami

JOB NUMBER: 13036.00
CHECKED BY:
ISSUE DATE: JANUARY 24, 2014
SCALE: 1/8" = 1'-0"

SHEET TITLE

EXTERIOR ELEVATIONS

SHEET NUMBER

S302

COPYRIGHT ADD INC 2011

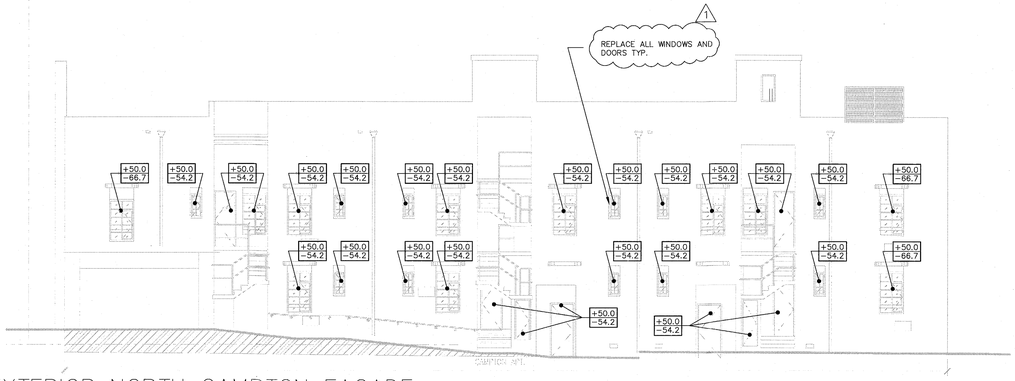

1 EXTERIOR NORTH CAMPTON FACADE
SCALE: 1/8" = 1'−0"

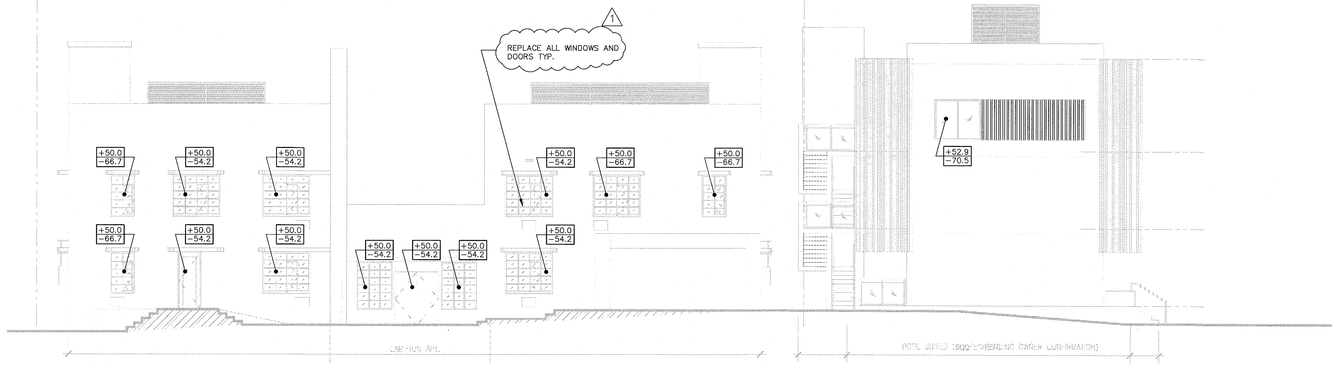

2 EXTERIOR EAST CAMPTON AND POOL SUITES FACADE
SCALE: 1/8" = 1'−0"

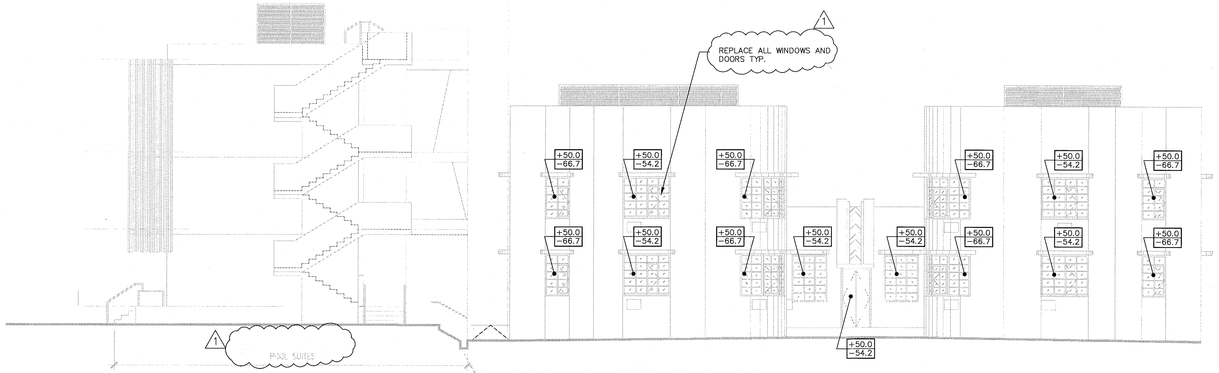

3 EXTERIOR WEST CAMPTON AND POOL SUITES FACADE
SCALE: 1/8" = 1'−0"

+	= ALLOWABLE PRESSURE IN PSF
−	= ALLOWABLE SUCTION IN PSF

Kd = 0.85 INCLUDED
EXPOSURE D
Vasd = 139 MPH

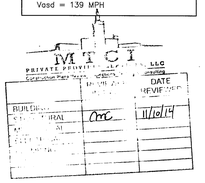

PERMIT SET
1/24/14

THESE ARE PROGRESS DRAWINGS, THEREFORE THEY ARE ISSUED PRIOR TO COMPLETION OF THE STRUCTURAL DESIGN, AND OTHER DESIGN DISCIPLINES, INCLUDING BUT NOT LIMITED TO ARCHITECTURAL OR MECHANICAL DESIGNS; AND AS SUCH, ARE INCOMPLETE BY NATURE FOR THE COMPREHENSIVE SCOPE OF THE PROJECT. ALLOWANCES FOR STRUCTURAL ELEMENTS REQUIRED DUE TO THE COMPLETION AND CROSS-COORDINATION OF ALL OTHER DISCIPLINES SHOULD BE MADE.

Structural Drawing Updated 1−27−14
Based on Architectural Backgrounds Dated 1−22−14

5-5-14
FREDERIC CARRIE
P.E. FLORIDA
REG. #60791

ONMJ
O'Donnell, Noccarato, Mignogna & Jackson
STRUCTURAL ENGINEERS
321 15TH STREET, SUITE 200
WEST PALM BEACH, FLORIDA 33401
(561) 835 - 9994 FAX (561) 835 - 8255
LIC. #0004386
JOB # 665.073

HADDON HALL
1500 COLLINS AVE
MIAMI BEACH, FL

KEYPLAN N.T.S.

REVISIONS

NO.	DESCRIPTION	ISSUE DATE
1	PROGRESS TO 100% CD	2/7/14
2	PERMIT REVIEW COMMENTS	3/14/14

PERMIT SET

NORTH SEAL

Jonathan Cardello
Lic. # AR93391

ADD Inc Architecture Interiors Planning

One Biscayne Tower
Suite 1670
Two South
Biscayne Boulevard
Miami, Fl 33131
T. 305.482.8700
F. 305.482.8770
www.addinc.com
Lic. # AA26001507

Boston Miami

JOB NUMBER: 13036.00
CHECKED BY:
ISSUE DATE: JANUARY 24, 2014
SCALE: 1/8" = 1'−0"

SHEET TITLE

EXTERIOR ELEVATIONS

SHEET NUMBER

S303

COPYRIGHT ADD INC 2011

STRUCTURAL NOTES

CONTRACTOR NOTE:

THE CONTRACTOR IS SOLELY RESPONSIBLE FOR INITIATING, MAINTAINING AND SUPERVISING ALL SAFETY PRECAUTIONS AND PROGRAMS IN CONNECTION WITH THE WORK. O'DONNELL, NACCARATO, MIGNOGNA & JACKSON, INC. IS NOT RESPONSIBLE FOR THE MEANS AND METHODS OF CONSTRUCTION OR FOR RELATED SAFETY PRECAUTIONS AND PROGRAMS.

CODES AND STANDARDS

1. WIND LOADS AS PER:
   A. SECTION 1609 OF THE FLORIDA BUILDING CODE 2010 EDITION WITH AN ULTIMATE WIND SPEED VULT = 179 MPH (NOMINAL WIND SPEED VASD = 136 MPH), FOR RISK CATEGORY 2, EXPOSURE D AND INTERNAL PRESSURE COEFFICIENT +/- 0.18.
   B. THIS BUILDING IS DESIGNED AS AN ENCLOSED BUILDING.
   C. ASCE 7-10 /EDITION, WITH AN ULTIMATE WIND SPEED VULT = 179 MPH NOMINAL WIND SPEED VASD = 136 MPH), FOR RISK CATEGORY 2, EXPOSURE D AND INTERNAL PRESSURE COEFFICIENT +/- 0.18.
2. THE PROJECT WAS DESIGNED IN ACCORDANCE WITH THE:
   A. FLORIDA BUILDING CODE 2010 EDITION.
   B. BUILDING CODE REQUIREMENTS FOR REINFORCED CONCRETE (ACI 318/ LATEST EDITION).
   C. MANUAL OF STANDARD PRACTICE FOR DETAILING REINFORCED CONCRETE STRUCTURES (ACI 315/ LATEST EDITION).
   D. MANUAL OF STANDARD PRACTICE FOR WELDING REINFORCING STEEL, INSERTS & CONNECTIONS IN REINFORCED CONCRETE CONSTRUCTION. AWS. D1.4/ LATEST EDITION.
   E. SPECIFICATION FOR THE DESIGN, FABRICATION & ERECTION OF STRUCTURAL STEEL FOR BUILDINGS. (AMERICAN INSTITUTE OF STEEL CONSTRUCTION) AISC ASD/ 9TH EDITION OR LRFD 3RD EDITION.
   F. SPECIFICATION FOR STRUCTURAL CONCRETE FOR BUILDINGS, ACI 301/LATEST EDITION.
   G. NATIONAL DESIGN SPECIFICATION, WOOD CONSTRUCTION NDS/LATEST EDITION.
   H. BUILDING CODE REQUIREMENTS AND SPECIFICATIONS FOR MASONRY STRUCTURES (ACI 530, 530.1/ASCE 5, 6/TMS 402, 602/LATEST EDITIONS).
   I. ASCE 7- 10.
3. ARCHITECTURAL AND MECHANICAL DRAWINGS:
   A. THE STRUCTURAL DRAWINGS ARE PART OF THE CONTRACT DOCUMENTS AND DO NOT BY THEMSELVES PROVIDE ALL THE INFORMATION REQUIRED TO PROPERLY COMPLETE THE PROJECT STRUCTURE. THE GENERAL CONTRACTOR SHALL CONSULT THE ARCHITECTURAL, MECHANICAL AND ELECTRICAL DRAWINGS AND COORDINATE THE INFORMATION CONTAINED IN THESE DRAWINGS WITH THE STRUCTURAL DRAWINGS TO PROPERLY CONSTRUCT THE PROJECT.
   B. REFER TO ARCHITECTURAL, MECHANICAL OR ELECTRICAL DRAWINGS FOR ADDITIONAL OPENINGS, DEPRESSIONS, FINISHES, INSERTS, BOLTS SETTINGS, DRAINS, REGLETS, ETC.
   C. BEFORE ORDERING ANY MATERIALS OR DOING ANY WORK, THE CONTRACTOR SHALL VERIFY ALL MEASUREMENTS TO PROPERLY SIZE OR FIT THE WORK. NO EXTRA CHARGE OR COMPENSATION WILL BE ALLOWED BY THE OWNER RESULTING FROM THE CONTRACTOR'S FAILURE TO COMPLY WITH THIS REQUIREMENT.
   D. DISCREPANCIES SHALL BE BROUGHT TO THE ATTENTION OF THE ARCHITECT AND ENGINEER BEFORE PROCEEDING WITH ANY WORK.
   E. ALL STRUCTURES HAVE BEEN DESIGNED TO RESIST THE DESIGN LOADS LISTED ONLY AS COMPLETED STRUCTURES. THE GENERAL CONTRACTOR SHALL FULLY BRACE AND OTHERWISE PROTECT WORK IN PROGRESS UNTIL THE STRUCTURES ARE COMPLETED. THE GENERAL CONTRACTOR SHALL ALSO INSURE THAT ITS OPERATIONS AND PROCEDURES PROVIDE NO LOADING GREATER THAN THE DESIGN LOADS LISTED ON ANY MEMBER.
4. SECTIONS AND DETAILS:

   ALL DETAILS, SECTIONS AND NOTES SHOWN ON THE DRAWINGS ARE INTENDED TO BE TYPICAL AND SHALL APPLY TO SIMILAR SITUATIONS ELSEWHERE UNLESS OTHERWISE SHOWN.
5. THRESHOLD INSPECTIONS SHALL BE PERFORMED DURING CONSTRUCTION OF THIS BUILDING AS REQUIRED BY SECTION 110.3.7 OF FBC.
6. MATERIALS AND ASSEMBLY TEST AS FOLLOWS:
   A. EXTERIOR WINDOWS, SLIDING AND PATIO GLASS DOORS SHALL BE TESTED BY AN APPROVED INDEPENDENT TESTING LABORATORY, AND SHALL BE LABELED WITH AN APPROVED LABEL IDENTIFYING THE MANUFACTURER, PERFORMANCE CHARACTERISTICS AND APPROVED PRODUCT CERTIFICATION AGENCY, TESTING LABORATORY, EVALUATION ENTITY OR FLORIDA STATE WIDE PRODUCT APPROVAL NUMBER TO INDICATE COMPLIANCE WITH THE REQUIREMENTS OF ONE OF THE FOLLOWING SPECIFICATIONS:

      ANSI/AAMA/NWWDA 101/I.S. 2-97 OR TAS 202 (HVHZ SHALL COMPLY WITH TAS 202)
   B. EXTERIOR DOOR ASSEMBLIES SHALL BE TESTED FOR STRUCTURAL INTEGRITY IN ACCORDANCE WITH ASTM E330 AT A LOAD OF 1.5 TIMES THE REQUIRED DESIGN PRESSURE LOAD. THE LOAD SHALL BE SUSTAINED FOR 10 SECONDS WITH NO PERMANENT DEFORMATION OF ANY MAIN FRAME OR PANEL MEMBER IN EXCESS OF 0.4 PERCENT OF ITS SPAN AFTER THE LOAD IS REMOVED. HVHZ SHALL COMPLY WITH TAS 202. AFTER EACH SPECIFIED LOADING, THERE SHALL BE NO GLASS BREAKAGE, PERMANENT DAMAGE TO FASTENERS, HARDWARE PARTS, OR ANY OTHER DAMAGE, WHICH CAUSES THE DOOR TO BE INOPERABLE.
   C. CUSTOM (ONE OF A KIND) EXTERIOR DOOR ASSEMBLIES SHALL BE TESTED BY AN APPROVED TESTING LABORATORY OR BE ENGINEERED IN ACCORDANCE WITH ACCEPTED ENGINEERING PRACTICES.
   D. WINDOW AND DOOR ASSEMBLIES SHALL BE ANCHORED IN ACCORDANCE WITH THE PUBLISHED MANUFACTURER'S RECOMMENDATIONS TO ACHIEVE THE DESIGN PRESSURE SPECIFIED. SUBSTITUTE ANCHORING SYSTEM USED FOR SUBSTRATES NOT SPECIFIED BY THE FENSTRATION MANUFACTURER SHALL PROVIDE EQUAL OR GREATER ANCHORING PERFORMANCE AS DEMONSTRATED BY ACCEPTED ENGINEERING PRACTICE.
7. ALL FASTENERS DESIGNATED, AS STAINLESS STEEL SHALL CONFORM TO AISI 316 STAINLESS STEEL.

SPECIALTY ENGINEERED PRODUCTS

1. THE GENERAL CONTRACTOR IS RESPONSIBLE TO COORDINATE THE PROPER SUBMISSION OF SPECIALTY ENGINEERED SHOP DRAWINGS WHICH SHALL BE SIGNED AND SEALED BY AN ENGINEER REGISTERED IN THE STATE OF FLORIDA. IT IS THE GENERAL CONTRACTOR'S RESPONSIBILITY TO ASSURE THAT THE SPECIALTY ENGINEERED SHOP DRAWINGS ARE SUBMITTED IN A TIMELY MANNER SO AS TO ALLOW REVIEWS AND RESUBMISSIONS AS REQUIRED. ALL SPECIALTY ENGINEERED PRODUCTS SHALL BE DESIGNED FOR THE APPROPRIATE GRAVITY LOADS AND WIND LOADS INCLUDING UPLIFT AND LATERAL LOADS. INTERIOR SPECIALTY PRODUCTS SHALL BE DESIGNED FOR LATERAL LOADS TO ASSURE STABILITY. SPECIALTY ENGINEERED PRODUCTS SHALL BE, BUT ARE NOT LIMITED TO, THE FOLLOWING:
   A. LIGHT GAUGE METAL, INCLUDING BUT NOT LIMITED TO, SOFFITS, CLADDING, CEILINGS, ETC.
   B. MISCELLANEOUS METALS INCLUDING STEEL STAIRS, HAND RAILS AND SAFETY RAILS, MECHANICAL EQUIPMENT SUPPORTS, FRAMES THAT SUPPORT MACHINES, PIPES OR OTHER STRUCTURAL METAL USED FOR SUPPORT OF MECHANICAL SYSTEMS.
   C. MISCELLANEOUS HANGERS, CHANDELIERS, CABINETS, METAL FRAMES, LADDERS, RIGGING, HANGING WALLS, RAILINGS, GLAZING FRAMES, CLADDING SUCH AS STONE, PRECAST, ALUMINUM, METAL PANELS, CABLE BARRIER SYSTEMS, ETC. OR ANY OTHER MISCELLANEOUS PRODUCT REQUIRED BY ANY OF THE CONSTRUCTION DOCUMENTS.
   D. IN ADDITION TO THE LOADS SHOWN IN THE DESIGN LOAD SCHEDULE, THE SPECIALTY ENGINEER SHALL DESIGN FOR THE WEIGHT OF ALL MECHANICAL, PLUMBING AND ELECTRICAL EQUIPMENT AND FIXTURES, AS WELL AS CHANDELIER FIXTURES, BAR CABINETS, AND ART WORK / MOBILES.
   E. HELICAL PILE SYSTEM INCLUDING CAP PLATES AND BRACKETS.

GENERAL CONTRACTOR TO INCULDE IN THEIR BID THE COST OF THE ABOVE NOTED SPECIALTY ENGINEERING.

ADDITIONS/RENOVATIONS

1. ALL EXISTING CONDITIONS, DIMENSIONS, LOCATIONS AND ELEVATIONS OF EXISTING STRUCTURES SHOWN ON THE DRAWINGS SHALL BE VERIFIED BY THE GENERAL CONTRACTOR IN THE FIELD AND COORDINATED WITH THE NEW CONSTRUCTION PRIOR TO PREPARATION OF WORKING OR SHOP DRAWINGS OR FABRICATION AND COMMENCEMENT OF ANY WORK. IF DISCREPANCIES ARE DISCOVERED BETWEEN EXISTING CONDITIONS AND CONTRACT WORK, THE GENERAL CONTRACTOR SHALL IMMEDIATELY NOTIFY THE ARCHITECT OR ENGINEER PRIOR TO PERFORMANCE OF ANY WORK.
2. PRIOR TO SHOP DRAWING PREPARATION, THE GENERAL CONTRACTOR IS TO INVESTIGATE AND VERIFY ACTUAL FIELD CONDITIONS, EXPOSED OR CONCEALED AND TAKE INTO ACCOUNT ANY POSSIBLE CONSTRUCTION INTERFERENCES AND RELOCATIONS OF, BUT NOT LIMITED TO STRUCTURES, EQUIPMENT, UTILITIES, CABLES, DUCT LINES, PIPING, DRAIN LINES, ETC.
3. ANY PORTION OF EXISTING STRUCTURE ADJACENT TO THE CONSTRUCTION WHICH MAY BY DISTURBED OR DAMAGED BY THE CONTRACTOR DURING CONSTRUCTION SHALL BE RESTORED BY THE CONTRACTOR TO A CONDITION AS GOOD AS BEFORE THE COMMENCEMENT OF THE WORK AT NO ADDITIONAL COSTS TO THE OWNER.
4. EXISTING STRUCTURE SHALL BE PROTECTED, MAINTAINED AND SUPPORTED DURING THE CONSTRUCTION WORK.

DEMOLITION

1. CONTRACTOR TO:
   A. OBTAIN DEMOLITION PERMIT BEFORE PROCEEDING WITH THE WORK. CONTACT LOCAL BUILDING AUTHORITIES TO BECOME FAMILIAR WITH LOCAL LAWS AND REGULATIONS GOVERNING THIS WORK.
   B. PROVIDE THE NECESSARY LABOR, MATERIAL, SCAFFOLDING AND EQUIPMENT REQUIRED TO COMPLETE DEMOLITION AS DESCRIBED IN THE DRAWINGS.
   C. DISCONNECT ALL ELECTRICAL, PLUMBING AND AIR CONDITIONING SYSTEMS WITHIN THE AREA TO BE DEMOLISHED BEFORE PROCEEDING WITH DEMOLITION WORK.
   D. DEMOLISH ONLY THE MEMBERS INDICATED IN THE DRAWINGS. DEMOLISH CONCRETE MEMBERS IN SMALL SECTIONS. TAKE EVERY PRECAUTION TO PROTECT EXISTING STRUCTURE THAT IS TO REMAIN. USE BRACING AND SHORING AS NECESSARY TO AVOID COLLAPSE OF STRUCTURE.
   E. REMOVE ALL RUBBISH AND DEBRIS FROM BUILDING AND FROM PROPERTY.

SHORING AND RESHORING

1. THE CONTRACTOR SHALL PROVIDE AND MAINTAIN SHORING, BRACING AND STRUCTURAL SUPPORTS AS REQUIRED TO PRESERVE THE STABILITY OF THE STRUCTURE DURING CONTRUCTION. SUBMIT SIGNED AND SEALED SHOP DRAWINGS PREPARED BY A DELEGATED ENGINEER EXPERIENCED IN SUCH WORK AND LICENSED IN STHE STATE OF FLORIDA. SUBMIT DRAWINGS TO THE ARCHITECT, ENGINEER, SPECIAL INSPECTOR, AND BUILDING OFFICIAL FOR RECORD ONLY. SHORING AND RESHORING DESIGN AND CONSTRUCTION IS THE SOLE RESPONSIBILITY OF THE CONTRACTOR AND THE ENGINEER IN HIS EMPLOY.

   THE DELEGATED ENGINEER WHO PREPARES THE SHORING AND REHORING DRAWINGS SHALL INSPECT THE SHORING AND RESHORING. HE SHALL PROVIDE A FIELD REPORT OF EACH INSPECTION TO THE CONTRACTOR AND ARCHITECT.
2. THE BRACING DETAILS OF THE EXTERIOR WALLS OF WHICH IN SOME CASES, THE ROOF DECK DIAPHRAGM AND ROOFING MEMBERS WILL BE REMOVED LEAVING THE EXTERIOR WALLS UNBRACED. IT IS THE CONTRACTOR'S RESPONSIBILITY TO HIRE A SPECIALTY SHORING AND BRACING ENGINEER TO PROVIDE THE REQUIRED DOCUMENTS FOR THIS EFFORT.

FOUNDATION

1. ALL SITE PREPARATION AND EXCAVATION WORK IS TO BE PERFORMED IN STRICT ACCORDANCE WITH THE:
   A. REPORT ON SOILS AND FOUNDATION INVESTIGATION PREPARED BY ARDAMAN AND ASSOCIATES.
2. THE BUILDING SITE SHOULD BE EXCAVATED TO THE DEPTH AND EXTENT INDICATED IN THE SOILS REPORT. ALL SUBGRADES SHALL BE APPROVED IN WRITING BY THE SOILS ENGINEER PRIOR TO BACKFILLING.
3. BOTTOM OF FOOTINGS TO BEAR ON:
   A. CONTROLLED COMPACTED FILL CAPABLE OF SAFELY SUPPORTING 4000 PSF.
4. SOILS SUPPORTING ALL FOOTINGS MUST BE INSPECTED AND APPROVED BY A REGISTERED SOILS ENGINEER BEFORE COMMENCING WORK. APPROVAL IN WRITING MUST INDICATE THE SOIL IS ADEQUATE TO SAFELY SUSTAIN SPECIFIED SOIL BEARING PRESSURE.
5. TOP OF ALL EXTERIOR FOOTINGS SHALL BE MINIMUM'-4" BELOW EXTERIOR FINISH GRADE.
6. EXCAVATION & BACKFILL:
   A. ALL EXCAVATION SHALL BE KEPT DRY. DE-WATERING WILL BE REQUIRED AND SHALL BE PROVIDED BY THE CONTRACTOR. THE DE-WATERING SHALL BE PROVIDED SO ALL EXCAVATIONS ARE DRY AND THE TESTING AGENCY CAN TAKE THE APPROPIRIATE DENSITY TESTS AND ALL OTHER REQUIREMENTS OF THE GEOTECHNICAL REPORT AND PROJECT CONSTRUCTION DOCUMENTS ARE MET. EXCAVATE TO DEPTHS AND DIMENSIONS INDICATED. TAKE EVERY PRECAUTION TO GUARD AGAINST ANY MOVEMENT OR SETTLEMENT OF ADJACENT STRUCTURES, UTILITIES, PIPING, ETC. (7)
   B. PROVIDE ANY BRACING OR SHORING NECESSARY TO AVOID SETTLEMENT OR DISPLACEMENT OF EXISTING AND NEW FOUNDATION OR STRUCTURES.
7. CENTERLINE OF FOOTINGS: SHALL COINCIDE WITH CENTERLINE OF COLUMNS UNLESS OTHERWISE NOTED ON DRAWINGS.
8. DIMENSIONS: ALL DIMENSIONS AND ELEVATIONS SHOWN ON THE STRUCTURAL DRAWINGS MUST BE VERIFIED AND COORDINATED WITH THE ARCHITECTURAL DRAWINGS BY THE CONTRACTOR BEFORE PROCEEDING WITH THE CONSTRUCTION. DISCREPANCIES SHALL BE BROUGHT TO THE ATTENTION OF THE ARCHITECT OR ENGINEER IN WRITING BEFORE PROCEEDING WITH ANY WORK.
9. DO NOT BACKFILL ANY BASEMENT WALLS UNTIL FIRST FLOOR IS IN PLACE OR THE WALLS ADEQUATELY BRACED.

CONCRETE

1. CONCRETE ELEMENTS TO HAVE THE FOLLOWING STRENGTHS:

A. FOUNDATIONS	6000 PSI
B. SLAB-ON-GRADE	6000 PSI
C. COLUMNS	6000 PSI (U.N.O)
D. WALLS	6000 PSI
E. BEAMS	6000 PSI
F. TIE BEAMS	6000 PSI
G. STRUCTURAL SLABS	6000 PSI
H. MASONRY GROUT	3000 PSI

   ALL OTHER CONCRETE TO BE 6000 PSI UNLESS NOTED OTHERWISE.
2. ALL CONCRETE SHALL BE READY MIX AND MEET THE FOLLOWING REQUIREMENTS:
   A. A MINIMUM COMPRESSIVE STRENGTH OF 3000 PSI @ 28 DAYS AND HAVE A MINIMUM OF 517 LBS. OF CEMENT PER CUBIC YARD.
   B. A MINIMUM COMPRESSIVE STRENGTH OF 6000 PSI @ 28 DAYS AND HAVE A MINIMUM OF 587 LBS. OF CEMENT PER CUBIC YARD.
   D. SLUMPS SHALL BE 3 INCH MINIMUM AND 5 INCH MAXIMUM.
   F. ALL CONCRETE TO HAVE MAXIMUM WATER/CEMENT RATIO OF 0.40.
   G. JOBSITE WATER SHALL NOT BE ADDED.
   H. CEMENT SHALL CONFORM WITH ASTM C150 TYPE 1. SLAG, ASTM C989 SHALL BE LIMITED TO 50% (BY WEIGHT OF CEMENTITIOUS MATERIAL AND FLY ASH, ASTM C618, CLASS F, SHALL BE LIMITED TO 25% (BY WEIGHT) OF CEMENTITIOUS MATERIAL.
3. ALL CONCRETE WORK SHALL COMPLY WITH THE REQUIREMENTS OF THE ACI BUILDING CODE (ACI 318/ LATEST EDITION), THE ACI DETAILING MANUAL (ACI 315/ 1994 EDITION), AND THE SPECIFICATIONS FOR STRUCTURAL CONCRETE FOR BUILDINGS (ACI 301/ LATEST EDITION).
4. SUBMIT ALL REINFORCING STEEL SHOP DRAWINGS FOR APPROVAL PRIOR TO ANY FABRICATION. (2)
5. CONCRETE COVER FOR REINFORCING STEEL SHALL BE AS REQUIRED BY ACI SPECIFICATIONS AND AS FOLLOWS:
   - AT CONCRETE CAST DIRECTLY AGAINST EARTH: 3"
   - AT ALL CONCRETE SLABS EXPOSED TO EXTERIOR ENVIRONMENT/WEATHER: 1.5"
   - AT ALL CONCRETE WALLS EXPOSED TO EXTERIOR ENVIRONMENT/WEATHER: 2.0"
   - AT ALL CONCRETE BEAMS/COLUMNS EXPOSED TO EXTERIOR ENVIRONMENT/WEATHER: 2.5"
6. WELDED WIRE FABRIC SHALL COMPLY WITH ASTM A 185, UNLESS OTHERWISE SPECIFIED. PLACE FABRIC 2" CLEAR FROM TOP OF THE SLAB IN SLAB ON GRADE AND SUPPORT ON SLAB BOLSTERS SPACED AT 3'-0" O.C.
7. REQUIREMENTS:
   A. ALL REINFORCING STEEL SHALL BE MANUFACTURED FROM HIGH STRENGTH BILLET STEEL CONFORMING TO ASTM DESIGNATION A 615 GRADE 60.
   B. WWF SHALL COMPLY WITH ASTM A 185.
   C. REINFORCING STEEL SHALL BE EPOXY COATED CONFORMING TO ASTM A776 81. INCREASE SPLICE AND DEVELOPMENT LENGTHS OF EPOXY COATED BARS BY 40%.
   D. REINFORCING STEEL SHALL BE GALVANIZED CONFORMING TO ASTM A776.
   E. ALL REINFORCING STEEL SHALL BE MANUFACTURED FROM HIGH MICRO-COMPOSITE (MMFX) STEEL REBAR, GRADE 100, CORROSION RESISTANT AND UNCOATED STEEL REINFORCEMENT FOR CONCRETE CONSTRUCTION.
   F. PROVIDE 10 MIL VAPOR BARRIER COMPLIANT WITH ASTM E1745 BELOW ALL SLAB ON GRADE.
8. LAP ALL BARS WITH CLASS B TENSION LAP SPLICE UNLESS OTHERWISE NOTED ON DRAWINGS. LAP ALL WWF A MINIMUM OF 12 INCHES (UNLESS OTHERWISE NOTED).
9. REINFORCING BARS:
   A. AT CORNERS OF CONCRETE WALLS, BEAMS AND CONTINUOUS WALL FOOTINGS, PROVIDE 1-#5 OR MATCHING HORIZONTAL BARS X 5'-0" BENT BAR FOR EACH HORIZONTAL BAR SCHEDULED AT EACH FACE.
   B. WHERE COLUMNS ARE AN INTEGRAL PART OF CONCRETE WALLS, WALL REINFORCEMENT SHALL BE CONTINUOUS THRU THE COLUMNS.
   C. ALL HOOKS SHOWN IN REINFORCEMENT SHALL BE ACI RECOMMENDED HOOKS UNLESS OTHERWISE NOTED.
   D. FOR BALCONIES, SLABS AND WALKWAYS EXPOSED TO WEATHER ALL REINFORCING STEEL (TOP AND BOTTOM) AS WELL AS SPACERS AND OTHER DEVICES FOR SPACING, SUPPORTING AND FASTENING REINFORCING SHALL BE GALVANIZED CONFORMING TO ASTM A767. BOLSTERS AND CHAIRS TO BE PLASTIC. CONCRETE PLACED IN THESE AREAS TO HAVE .40 W/C RATIO MAXIMUM AND CONTAIN 2.5 GALLONS OF CALCIUM NITRATE PER CUBIC YARD. REBAR COVER TO BE 1.5" MINIMUM.
   E. CONTRACTOR SHALL INCLUDE IN HIS BASE BID THE COST OF 4 TONS OF ADDITIONAL REINFORCING STEEL, INCLUDING DETAILING, FABRICATION, BENDING, FURNISHING, AND PLACING. THIS EXTRA STOCK SHALL BE FURNISHED AND USED FOR SPECIAL CONDITIONS AS DIRECTED BY THE ARCHITECT, THE ARCHITECT'S AGENT OR BY THE OWNER'S CONSTRUCTION SUPERVISOR. THE PRICE OF THE UNUSED EXTRA STOCK SHALL BE CREDITED TO THE OWNER'S ACCOUNT.
10. CONSTRUCTION JOINTS IN STRUCTURAL SLABS AND BEAMS SHALL BE AT MID-SPAN AND KEY JOINTED WITH REINFORCING CONTINUOUS ACROSS JOINT AND ADDITIONAL SHEAR FRICTION REINFORCING. CONSTRUCTION JOINT LOCATIONS SHALL BE SUBMITTED FOR REVIEW AND APPROVAL PRIOR TO CONSTRUCTION. CONSTRUCTION JOINTS IN POST-TENSION SLABS SHALL BE LOCATED AND DESIGNED BY SPECIALTY ENGINEER.
11. ALL MECHANICAL COUPLERS SHALL DEVELOP 1.25 FY OF REBAR IN TENSION OR COMPORESSION AND COMPLY WITH ACI 318.
12. CONCRETE LINTELS:
    A. DROP BOTTOM OF BEAM OR SLAB AT WINDOWS, DOORS AND MASONRY OPENINGS AS REQUIRED TO PROVIDE A CONCRETE CLOSURE BETWEEN THE BOTTOM OF THE BEAM AND WINDOW AND/OR DOOR HEADER OR PROVIDE A PRECAST CONCRETE LINTEL BY CASTCRETE IF NOT NEXT TO A POURED CONCRETE COLUMN.
    B. MAXIMUM DROP SHALL BE 16" (TWO BLOCK COURSES) AND SPAN EQUAL TO MASONRY OPENING WIDTH. PROVIDE 2 #5 AT BOTTOM OF DROP INCLUDING #3 TIES @ 24" O.C. EXTENDING TO TOP OF BEAM REINFORCING. IF THE LINTEL EXCEEDS THE ABOVE LIMIT OF DROP, A SEPARATED LINTEL SHALL BE PROVIDED AS FOLLOWS:
       L1. OPENING LESS THAN 6'0" WIDE 8" X 8" W/2 #5 BOTTOM BARS.
       L2. OPENING BETWEEN 6'0" AND 12'0" WIDE 8" X 12" W/2 #6 BOTTOM BARS.
    C. LINTELS TO HAVE 8" MINIMUM BEARING AT EACH END.
    D. IF THE MASONRY OPENING HAS AN END ADJACENT TO A CONCRETE COLUMN PROVIDE (2) #5 OR #6 DOWELS, AS THE CASE MAY BE, IN THE CONCRETE COLUMN WITH SHEAR KEY 1-1/2 INCH DEEP BY LINTEL'S DEPTH AND WIDTH FOR ITS SUBSEQUENT CONSTRUCTION.

MASONRY

1. MASONRY UNITS SHALL BE
   A. LOAD BEARING ASTM C90
   B. TYPE II NON-MOISTURE CONTROLLED
   C. NORMAL WEIGHT
2. THE COMPRESSIVE STRENGTH OF MASONRY (F'M) SHALL BE 1,500 PSI AS CALCULATED IN ACCORDANCE WITH ASTM C1314.
3. ALL MORTAR SHALL BE IN ACCORDANCE WITH ASTM SPECIFICATION C270.
   A. FROM FIELD OBTAINED TEST CUBES. (MIN. OF TWO)
4. GROUT SHALL BE A HIGH SLUMP MIX
   A. IN ACCORDANCE WITH ASTM SPECIFICATION C476
   B. HAVING A MINIMUM COMPRESSIVE STRENGTH OF 3,000 PSI
   C. FROM FIELD OBTAINED TEST CUBES. (MIN. OF TWO)
5. ALL CONCRETE MASONRY BEARING AND SHEAR WALLS SHALL BE
   A. CONSTRUCTED
   B. INSPECTED BY A CERTIFIED INSPECTION COMPANY AND CONSTRUCTED

   IN ACCORDANCE WITH THE "BUILDING CODE REQUIREMENT FOR MASONRY STRUCTURES" (ACI 530/ASCE 5/TSM 402) AND "SPECIFICATIONS FOR MASONRY STRUCTURES" (ACI 530.1/ASCE 6/TSM 602)/ LATEST EDITIONS.
6. PROVIDE 8" X 8" MASONRY BEAM WITH 2 #5 CONT. AT EVERY WINDOW SILL. EXTEND BEAM 8" BEYOND EDGE OF OPENING.
7. PROVIDE HOT DIPPED GALVANIZED LADDER TYPE HORIZONTAL JOINT REINFORCEMENT (9 GA.) AT 16" ON CENTER VERTICAL IN ALL MASONRY WALLS. PROVIDE DOVE TAIL SLOT ANCHORS AT CONCRETE COLUMNS.

   CONNECT MULTI-WYTHE WALLS AS FOLLOWS:

   PROVIDE DOUBLE SIDED ROD-ADDUR TYPE HORIZONTAL JOINT REINFORCEMENT AT 16" O.C.

   PROVIDE 1 1/2" WIDE 16 GAGE CORRUGATED MASONRY ANCHOR WITH 1/4" DIAMETER TAPCO, WITH 1/2" EMBED, AT 24" O.C. HORIZONTAL AND 16" O.C. VERTICAL.

   FOR JOINT REINFORCEMENT, WALL TIES, ANCHORS AND INSERTS, APPLY A MINIMUM COAT OF 1.5 OUNCES PER SQUARE FOOT (PSF) (458/G/M2) COMPLY WITH THE REQUIREMENTS OF ASTM A153, CLASS B.
8. PROVIDE CONTROL JOINTS IN MASONRY WALLS AT A SPACING OF 30' + O.C. AND ALIGN WITH ARCHITECTURAL CONTROL JOINTS.
9. EPOXY GROUT SHALL BE NON-SHRINK HIGH CREEP RESISTANT, AND SHALL HAVE THE FOLLOWING MINIMUM ALLOWABLE PROPERTIES:
   TENSILE STRENGTH, ASTM C 30: 1,500 PSI
   FLEXURAL STRENGTH, ASTM C 580: 4,000 PSI
   COMPRESSIVE STRENGTH, ASTM C 579: 1,600 PSI/7 DAYS.
10. MINIMUM LAP SPLICES FOR REINFORCED CMU AS FOLLOWS:

BAR SIZE	#4	#5	#6	#7	#8
	24"	30"	36"	42"	48"

    A. LAP SPLICES SHALL OCCUR DIRECTLY ABOVE FOOTINGS AND SLABS. NO SPLICES ARE ALLOWED AT MID-HEIGHT OF WALL.
    B. LAP SPLICES THAT OCCUR AT CANTILEVERED WALLS SUCH AS: PARAPETS, RETAIING WALLS, ETC. SHALL HAVE LAP SPLICE LENGTHS INCREASED BY 50% TO 72 BAR DIAMETERS.
11. MASONRY LINTELS:
    A. A PRECAST CONCRETE LINTEL BY CASTCRETE SHALL BE PROVIDED OVER ALL MASONRY WALL OPENINGS. THE LINTEL SHALL BE FULLY GROUTED.
    B. LINTELS TO HAVE 4" MINIMUM BEARING AT EACH END.
    C. SHORE PRECAST LINTEL PER MANUFACTUER'S INSTRUCTIONS.

STEEL

1. ALL STRUCTURAL STEEL SHALL BE FABRICATED AND ERECTED IN ACCORDANCE WITH THE LATEST AISC CODE. STRUCTURAL STEEL SHALL CONFORM TO:
   A. ASTM SPECIFICATION A 992 GRADE 50 FOR ALL WIDE FLANGE BEAMS.
   B. ASTM SPECIFICATION A 36 FOR MISCELLANEOUS STEEL SHAPES (ANGLES, PLATES, ETC.).
   C. SQUARE OR RECTANGULAR HSS SHALL CONFORM TO ASTM SPECIFICATION A 500 GRADE B (FY=46 KSI).
   D. ALL STEEL TO HAVE A SHOP COAT OF RUST INHIBITIVE PAINT.
   E. DELETE PAINT ON ALL STEEL TO RECEIVE SPRAYED ON FIREPROOFING OR CONCRETE ENCASEMENT.
   F. ALL MILL CAMBER TO BE ORIENTED UPWARD DURING FABRICATION AND ERECTION.
2. ALL SHOP AND FIELD WELDING SHALL BE PERFORMED BY WELDERS QUALIFIED, AS DESCRIBED IN "AMERICAN WELDING SOCIETY'S STANDARD QUALIFICATION PROCEDURE" (AWS D1.1), TO PERFORM THE TYPE OF WORK REQUIRED.
3. ALL CONNECTIONS SHALL BE BOLTED WITH 3/4" DIAMETER, A-325 HIGH STRENGTH BOLTS OR WELDED (UNLESS SHOWN OTHERWISE ON THE DRAWINGS).
   A. FULL DEPTH DOUBLE CLIP ANGLE CONNECTIONS ARE TO BE USED ON ALL GIRDER AND BEAM CONNECTIONS TO COLUMNS. BOLTS TO BE AT 3-INCH O/C VERTICAL.
   B. ALL CONNECTIONS TO HOLLOW STRUCTURAL SECTION (HSS) COLUMNS ARE TO BE THRU-PLATE UNLESS NOTED OTHERWISE.
   C. ALL CONNECTIONS SHALL BE DOUBLE ANGLES UNLESS NOTED OTHERWISE.
4. ALL ALUMINUM AND STEEL MEMBERS TO BE TREATED OR PROPERLY SEPARATED TO PREVENT GALVANIC AND CORROSIVE EFFECTS.
5. ALL STEEL WELDING RODS SHALL BE E70XX ELECTRODES.
6. SUBMIT ALL STEEL SHOP DRAWINGS FOR APPROVAL PRIOR TO ANY FABRICATION.
7. STAINLESS STEEL SHALL CONFORM TO THE LATEST AISC CODE. STAINLESS STEEL ROD MATERIAL SHALL MEET THE REQUIREMENTS OF ASTM F593 (AISI 304). STAINLESS STEEL WASHERS SHALL MEET ANSI B18.22.1/LATEST EDITION, TYPE A PLAIN, REQUIREMENTS. STAINLESS STEEL NUTS SHALL MEET ASTM F594 REQUIREMENTS.
8. EQUIPMENT SUPPORTS:

   PROVIDE ALL SUPPORTING STEEL NOT INDICATED ON PLAN AS REQUIRED FOR THE INSTALLATION OF MECHANICAL EQUIPMENT AND MATERIALS, INCLUDING ANGLES, CHANNELS, BEAMS, HANGERS, ETC. DO NOT SUPPORT EQUIPMENT OR PIPING FROM METAL DECKING.
9. CONTRACTOR SHALL INCLUDE IN HIS BASE BID THE COST OF 2 TONS OF ADDITIONAL STRUCTURAL STEEL (MEMBERS OVER 10 LBS. PER FOOT) AND 2 TONS OF MISCELLANEOUS STEEL (MEMBERS 10 LBS. PER FOOT OR LESS)INCLUDING PREFABRICATED METAL ROOF TRUSSES FURNISHING, DETAILING, FABRICATION, CLEANING, PAINTING, DELIVERY AND ERECTION. THIS EXTRA STOCK SHALL BE FURNISHED AND USED FOR SPECIAL CONDITIONS AS DIRECTED BY THE ARCHITECT, THE ARCHITECT'S AGENT OR BY THE OWNER'S CONSTRUCTION SUPERVISOR. THE PRICE OF THE UNUSED EXTRA STOCK SHALL BE CREDITED TO THE OWNER'S ACCOUNT.

WOOD

1. ALL STRUCTURAL WOOD MEMBERS ARE DESIGNED AS "DRY-USE". MOISTURE CONTENT MUST BE 19% OR LESS. STORE WOOD FRAMING ABOVE GROUND AND UNDER TARPS WITH PROPER AIR CIRCULATION.
2. ALL LUMBER SHALL BE SOUTHERN PINE SPECIES #2 GRADE OR APPROVED EQUAL. ALLOWABLE DESIGN STRESSES SHALL FOLLOW NATIONAL DESIGN SPECIFICATION (NDS) (LATEST EDITION).
3. HEADERS AT NON BEARING CONDITIONS SHALL BE AS FOLLOWS:

OPENING SIZE	HEADER
UP TO 4' -0"	(2) 2" X 6"
4'- 0" TO 6'- 0"	(2) 2" X 8"
6'- 0" TO 9'- 0"	(2) 2" X 10"

4. PROVIDE SP ACQ PRESSURE TREATED LUMBER IN ACCORDANCE WITH AWPA STANDARDS TO A MINIMUM 0.40 PCF RETENTION WHERE LUMBER IS IN CONTACT WITH CONCRETE/MASONRY OR OUTSIDE OF BUILDING. ALL METAL CONNECTORS IN CONTACT WITH PRESSURE TREADED LUMBER SHALL BE GALVANIZED WITH A RATING OF G-185 AND CONFORM TO ASTM A653. ALL NAILS AND SCREWS USED WITH PRESSURE TREATED LUMBER ARE TO BE HOT-DIPPED GALVANIZED AND TO CONFORM TO ASTM A153 CLASS D. ELECTROGALVANIZED FASTENERS SHALL HAVE A CLASS RATING PER ASTM B695 NO LESS THAN 55. ALUMINUM NOT TO BE USED IN DIRECT CONTACT WITH ACQ TREATED LUMBER.
5. PLYWOOD SHEATHING:
   A. FLOOR: USE 3/4" T&G APA 24oc STURD-I-FLOOR, EXP. 1, PLYWOOD SUB-FLOOR SHEATHING.
   B. WALL: Use 15/32" APA 32/16 RATED, STRUCTURAL 1, EXP. 1, PLYWOOD SHEATHING.
6. WOOD CONNECTIONS - ALL NAILS USED FOR STRUCTURAL FRAMING MEMBERS SHALL BE COMMON WIRE, U.N.O. ALL NAILS, TRUSS HANGERS, TRUSS ANCHORS AND STRAPS SHALL BE GALVANIZED FOR CORROSIVE RESISTANCE. ALL METAL STRAPS MUST BE INSTALLED WITH EQUAL LENGTHS ABOUT THE JOINT LINE. USE SIMPSON STRONG-TIE CONNECTOR PRODUCTS OR APPROVED EQUAL. TOE NAILING WILL NOT BE PERMITTED.

SHOP DRAWINGS

1. THE SHOP DRAWINGS SHALL BE SUBMITTED IN COMPLETE PACKAGES FOR THE FOLLOWING:
   A. CONCRETE MIX DESIGNS
   B. CONCRETE REINFORCING STEEL AND WELDED WIRE FABRIC
   C. STRUCTURAL STEEL
   D. HELICAL PILE SYSTEM
2. PRE-ENGINEERED ITEMS SHALL BE SUBMITTED SIGNED AND SEALED BY A SPECIALTY ENGINEER REGISTERED IN THE STATE OF FLORIDA.

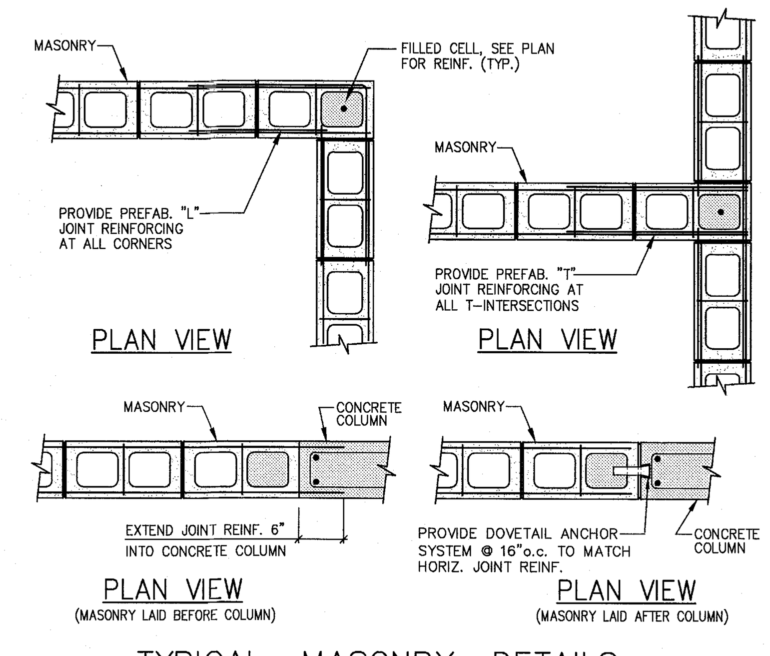

TYPICAL MASONRY DETAILS
N.T.S.

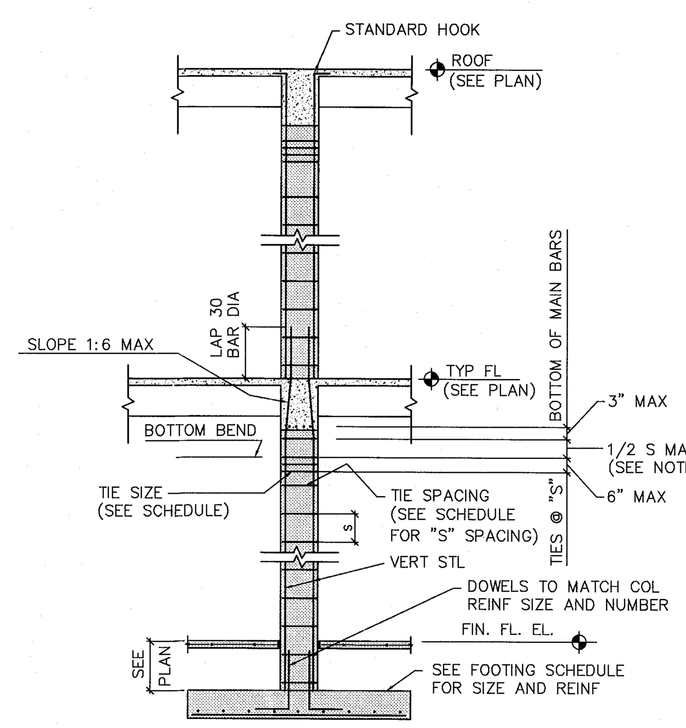

NOTE:
1. ADD EXTRA TIES IF THE DISTANCE BETWEEN BOTTOM LAYER OF SLAB REINFORCEMENT AND LOWER POINT OF OFFSET BENT IS MORE THAN 1/2 S (HALF SCHED. TIES SPACING).
2. WHERE COLUMN IS SPLICED BETWEEN FLOORS, PROVIDE CLASS B TENSION LAP SPLICE.

TYPICAL CONCRETE COLUMN DETAIL
N.T.S.

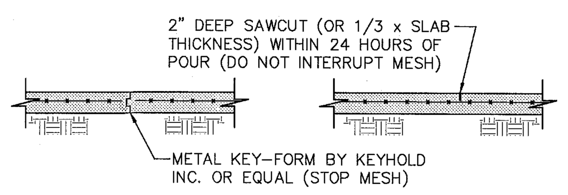

TYPICAL SLAB-ON-GRADE
N.T.S.

NOTE: CONTROL JOINTS/CONSTRUCTION JOINTS SHALL CREATE PANELS OF 150 SQ. FEET (MAXIMUM)

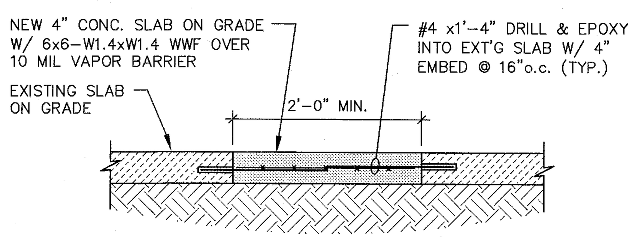

NOTE TO G.C.
REPLACE CONTROL JOINTS PER ORIGINAL LOCATION, 2" DEEP

SLAB ON GRADE REPAIR DETAIL
N.T.S.

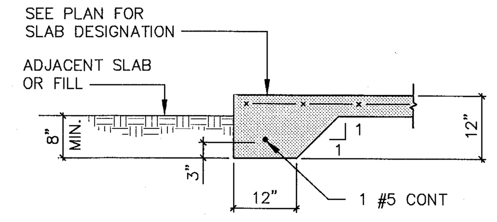

THICKENED EDGE (T.E.)
N.T.S.

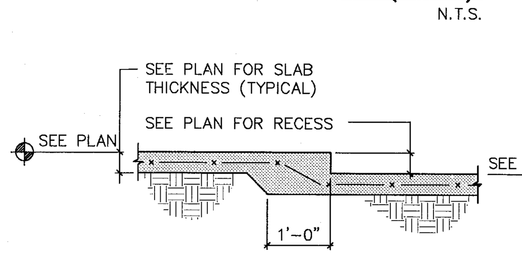

TYPICAL SLAB RECESS
N.T.S.

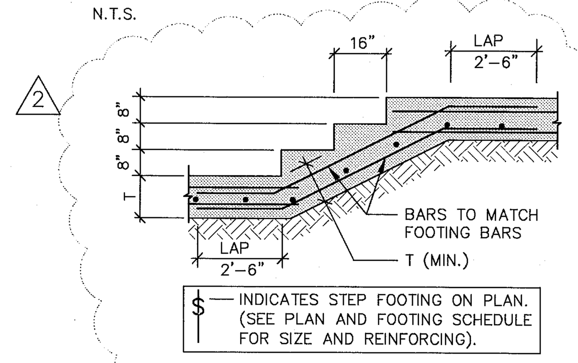

$ — INDICATES STEP FOOTING ON PLAN. (SEE PLAN AND FOOTING SCHEDULE FOR SIZE AND REINFORCING).

TYPICAL STEP FOOTING DETAIL
N.T.S.

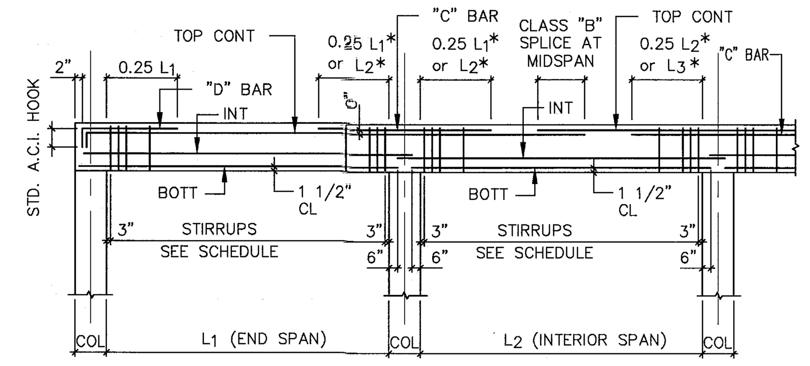

"C" BAR : TOP BAR AT INTERIOR SUPPORT (IN ADDITION TO TOP CONT BARS) PLACE IN SAME LAYER AS TOP CONT BARS (U.O.N.). LOCATE AT RIGHT SUPPORT OF SPAN INDICATED IN SCHEDULE.

"D" BAR : TOP BAR AT EXTERIOR SUPPORT (IN ADDITION TO TOP CONT BARS) PLACE IN SAME LAYER AS TOP CONT BARS (U.O.N.).

"INT" BARS : INTERMEDIATE BARS LOCATED AT A SPACING EQUAL TO THE WIDTH OF THE BEAM BUT NOT GREATER THAN 12" ABOVE BOTT BARS. IF MORE THAN ONE PAIR, PLACE IN LAYERS OF TWO.

CLASS "B" TENSION SPLICE (3000 PSI)				
#4	38"	#7	82"
#5	47"	#8	93"
#6	56"	#9	105"

* WHICHEVER IS GREATER.

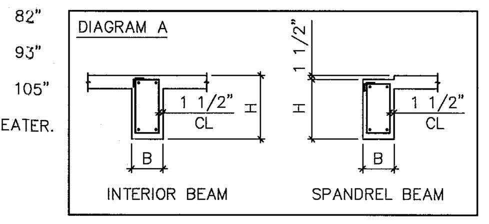

NOTES :

WHEN ADJACENT BEAMS OR TIE BEAMS HAVE TOP CONT BARS OF DIFFERENT SIZE, THE TRANSITION SHOULD BE MADE AT MIDSPAN OF THE BEAM WITH SMALLER SCHEDULED BARS. USE LAP SPLICE LENGTH OF SMALLER SIZE BAR.

(2L) - INDICATES BARS PLACE IN TWO LAYERS. WHERE BARS ARE PLACED IN TWO LAYERS, THE SECOND LAYER BARS MUST BE PLACED DIRECTLY UNDER BARS IN THE FIRST LAYER (IF TOP BAR) OR DIRECTLY OVER BAR IN THE FIRST LAYER (IF BOTT BAR). PROVIDE 1" CLEAR DISTANCE BETWEEN LAYERS OR ONE BAR DIAMETER, WHICHEVER IS THE GREATER DISTANCE.

SCHEDULED BEAM SIZES : [SEE DIAGRAM A]

"B" INDICATES BEAM WIDTH DIMENSION. WHEN BEAM IS OVER A BLOCK WALL, USE ACTUAL BLOCK WIDTH (7 5/8" or 11 5/8").
"H" INDICATES BEAM DEPTH DIMENSION. LESS 1 1/2" FOR RECESS FOR BLOCK WALL DEDUCTED WHERE APPLICABLE, OR MINIMUM DEPTH IN A VARIABLE DEPTH BEAM. COORDINATE BEAM CONFIGURATION WITH ARCHITECTURAL DRAWINGS.

TYPICAL BEAM BAR PLACEMENT DIAGRAM
N.T.S.

ULTIMATE

COMPONENT & CLADDING WIND DESIGN PRESSURES

PRESSURES BASED ON V_{ULT}	ROOF WIND LOADS			WALL WIND LOADS (SEE NOTE 1)	
	ROOF AREA (10 SF)			WALL AREA (25 SF)	
Kd IS INCLUDED	1	2	3	4	5
PRESSURE (PSF)	40.0	90.0	90.0	90.0	90.0
SUCTION (PSF)	98.4	165.0	165.0	97.5	120.0

1. EXTERIOR GLAZED OPENINGS IN BUILDINGS SHALL COMPLY WITH 2010 FLORIDA BUILDING CODE BY EITHER BEING DESIGNED FOR IMPACT RESISTANCE OR BEING PROTECTED BY IMPACT PROTECTIVE SYSTEMS.
2. WIND DESIGN PRESSURES NOTED MAY BE MULTIPLIED BY (.6) FOR COMPARISON TO ALLOWABLE (NOMINAL) WIND PRESSURES OF TESTED ASSEMBLIES. PER SECTION 1609.1.5 OF 2010 FBC.
3. REFER TO STRUCTURAL NOTES FOR ALL WIND LOAD PARAMETERS.
4. CORNER DISTANCE, A = 11.3 FEET (HADDON); 9.0 FEET (CAMPTON APTS); 3.0 FEET (POOL SUITES BLDG)

ALLOWABLE

COMPONENT & CLADDING WIND DESIGN PRESSURES

PRESSURES BASED ON V_{ASD}	ROOF WIND LOADS			WALL WIND LOADS (SEE NOTE 1)	
	ROOF AREA (10 SF)			WALL AREA (25 SF)	
Kd IS INCLUDED	1	2	3	4	5
PRESSURE (PSF)	24.0	54.0	54.0	54.0	54.0
SUCTION (PSF)	59.0	99.0	99.0	58.5	72.0

1. EXTERIOR GLAZED OPENINGS IN BUILDINGS SHALL COMPLY WITH 2010 FLORIDA BUILDING CODE BY EITHER BEING DESIGNED FOR IMPACT RESISTANCE OR BEING PROTECTED BY IMPACT PROTECTIVE SYSTEMS.
2. REFER TO STRUCTURAL NOTES FOR ALL WIND LOAD PARAMETERS.
3. CORNER DISTANCE, A = 11.3 FEET (HADDON); 9.0 FEET (CAMPTON APTS); 3.0 FEET (POOL SUITES BLDG)

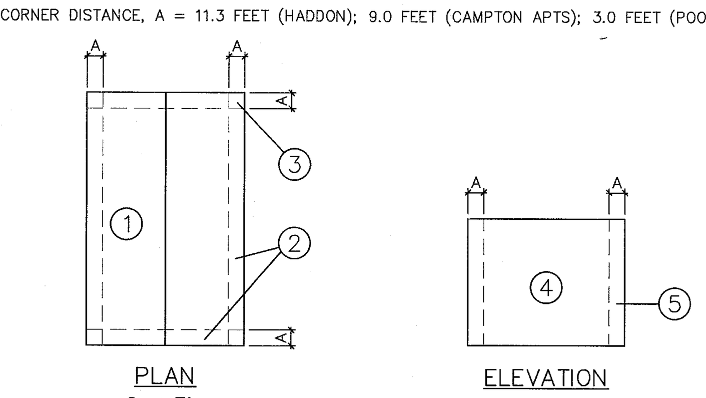

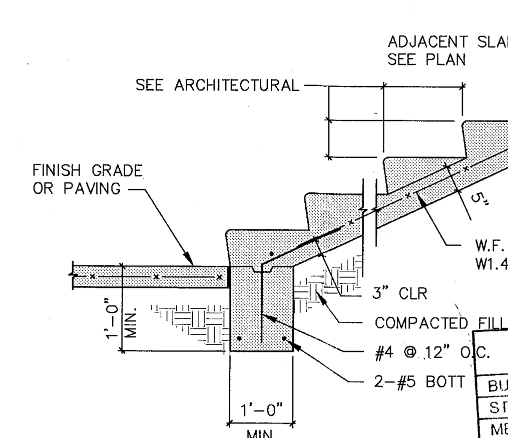

TYPICAL CONCRETE STAIR ON GRADE
N.T.S.

MTCI PRIVATE PROVIDER SERVICES, LLC — Construction Plans Review, Inspections, Testing & Consulting

	REVIEWER INITIALS	DATE REVIEWED
BUILDING		
STRUCTURAL	OnC	11/10/14
MECHANICAL		
ELECTRICAL		
PLUMBING		
SITE CIVIL		

DESIGN LOAD SCHEDULE
(ALL LOADS SHOWN ARE IN POUNDS PER SQ. FT.)

COMPONENT \ AREA	CAMPTON APARTMENTS: GYM	CAMPTON APARTMENTS: RESTAURANT	CAMPTON APARTMENTS: KITCHEN	POOL SUITES: FLOOR/BALCONY	POOL SUITES: ROOF
FRAMING	15	75	75	100	100
FLOORING	5	25	25	10	–
MEP/CLG/MISC.	15	90	100	15	50
TOTAL DEAD LOAD	35	190	200	125	150
TOTAL LIVE LOAD	100	100	150	40	30
TOTAL LOAD	135	290	350	165	180

BEAM SCHEDULE

MARK	SIZE BxH (inches)	REINFORCING BOTT	REINFORCING TOP	REINFORCING INT	STIRRUPS TIES	STIRRUPS SPACING
B-1	24"x24"	12#7**	12#7**	6#5**	#4+	@ 9" O.C.
B-2	16"x20"	6#6*	6#6*	–	#4+	@ 8" O.C.
B-3	10"x14"	2#7*	2#7*	2#5*	#4+	@ 3" O.C.
TB-1	8"x24"	4#7**	4#7**	–	#3	***
TB-2	8"x16"	2#6*	2#6*	–	#3	****
BB-1	8"x8"	–	–	2#5*	–	–
BB-2	8"x16"	2#5*	2#5*	–	–	–

NOTES :
1. TIE-BEAMS INTENDED TO BE CAST ATOP MASONRY WALLS - EXTEND AND HOOK WALL REINFORCING INTO TIE-BEAM.
2. LEGEND:
   * = 1 LAYER
   ** = 2 LAYERS
   + = CLOSED LOOP

*** @ 3" O.C. AT CANTILEVER, & ABOVE OPENINGS; 24" O.C. AT BALANCE
**** @ 3" O.C. ABOVE OPENINGS; 24" O.C. AT BALANCE

CONCRETE COLUMN SCHEDULE

MARK	SIZE (inches)	VERT. REINF.	TIES	SPACING
C-1	9"x12"	6#6	#3 (B)	@ 3" O.C.
C-2	16"x16"	8#6	#3 (B)	@ 10" O.C.
C-3	8"x10"(8000 PSI)	4#6	#3 (B)	@ 3" O.C.
C-4	16"x24"	12#6	#4 (A)	@ 8" O.C.
C-5	24"x24"	12#7	#4 (A)	@ 10" O.C.
C-6	8"x14"	4#6	#3 (B)	@ 3" O.C.
C-7	8"x25"x18"	12#6	#3 (C)	@ 8" O.C.
C-8	8"x18.25"x32"	14#6	#3 (D)	@ 8" O.C.

1. TIE TYPES:
   A: 4#3 HAIRPINS   C: 1#3 HAIRPIN
   B: NO HAIRPINS   D: 2#3 HAIRPINS

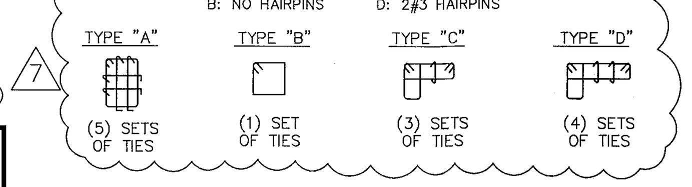

STEEL COLUMN SCHEDULE

MARK	SIZE	BASE PL	A.B.	REM
SC-1	HSS8"x4"x1/2"	SEE PLAN	*	(4) 1/2" DIAM H.S x5" LG
SC-2	HSS2.5x2.5x1/4	12"x12"x1"	N/A	

* (4) 3/4" DIAM A307 ANCHOR BOLTS X 15" LG W/ 3" HOOK AT END

FOOTING SCHEDULE

MARK	SIZE	REINFORCING
F20.12	2'-0" X 12" X CONT.	3#5 CONT BOTT; #5 @ 48" O.C. BOTT TRANSV
F30.24	3'-0" X 24" X CONT.	4#5 CONT T&B; #5 @ 24" O.C. T&B TRANSV
F40.24	4'-0" X 24" X CONT.	5#5 CONT T&B; #5 @ 12" O.C. T&B TRANSV
F14550	14'-6" X 5'-0"" X 24"	#6 @ 10" O.C. E.W. T&B

MASONRY WALL SCHEDULE

MARK	THICKNESS	REINFORCING
MW-1	8" CMU F'M = 1500 PSI	#5 @ 48" O.C. VERT MID
MW-2	8" CMU F'M = 1500 PSI	#5 @ 24" O.C. VERT MID
MW-3	8" CMU F'M = 1500 PSI	#6 @ 8" O.C. VERT MID
MW-4	8" CMU F'M = 1500 PSI	#6 @ 16" O.C. VERT MID
MW-5	8" CMU F'M = 1500 PSI	#5 @ 32" O.C. VERT MID

MASONRY WALL NOTES:
1. WALL SEGMENTS SHALL BE REINFORCED WITH 9 GA. GALVANIZED LATERAL REINFORCING @ 16" O.C. HORIZ. EXTEND REINFORCING 6" INTO POURED ELEMENTS AND AROUND ENCASED STEEL.
2. ADJACENT TO ANY EXTERIOR/INTERIOR WALL OPENING, PLACE (1) MATCHING VERTICAL IN CELL GROUTED SOLID, FULL HEIGHT.
3. ALL MASONRY REINFORCED CELLS SHALL BE FILLED WITH 3000 PSI GROUT MIX.
4. AT END, CORNERS, AND INTERSECTION OF WALLS PLACE (1) MATCHING VERTICAL IN CELL GROUTED SOLID, FULL HEIGHT.
5. CMU MARK ON PLAN GOES FROM BOTTOM OF TOP OF FOUNDATION TO ROOF U.N.O.

PERMIT SET
1/24/14

THESE ARE PROGRESS DRAWINGS, THEREFORE THEY ARE ISSUED PRIOR TO COMPLETION OF THE STRUCTURAL DESIGN, AND OTHER DESIGN DISCIPLINES. INCLUDING BUT NOT LIMITED TO ARCHITECTURAL OR MECHANICAL DESIGNS; AND AS SUCH, ARE INCOMPLETE BY NATURE FOR THE COMPREHENSIVE SCOPE OF THE PROJECT. ALLOWANCES FOR STRUCTURAL ELEMENTS REQUIRED DUE TO THE COMPLETION AND CROSS-COORDINATION OF ALL OTHER DISCIPLINES SHOULD BE MADE.

5-5-14
FREDERIC CARRIE
P.E. FLORIDA
REG. #60791

ONM&J
O'Donnell, Naccarato, Mignogna & Jackson
STRUCTURAL ENGINEERS
321 15TH STREET, SUITE 200
WEST PALM BEACH, FLORIDA 33401
(561) 835-9994 FAX (561) 835-8255
LIC. #0004386
JOB # 665.073

HADDON HALL
1500 COLLINS AVE

MIAMI BEACH, FL

KEYPLAN N.T.S.

REVISIONS

NO.	DESCRIPTION	ISSUE DATE
1	PROGRESS TO 100% CD	2/7/14
2	PERMIT REVIEW COMMENTS	3/14/14
7	POOL SUITES WALLS	4/4/14

PERMIT SET

NORTH SEAL

Jonathan Cardello
Lic. # AR93391

ADD Inc — Architecture Interiors Planning

One Biscayne Tower
Suite 1670
Two South
Biscayne Boulevard
Miami, Fl 33131
T. 305.482.8700
F. 305.482.8770
www.addinc.com
Lic. # AA26001507

Boston Miami

JOB NUMBER: 13036.00
CHECKED BY:
ISSUE DATE: JANUARY 24, 2014
SCALE:

SHEET TITLE

TYPICAL NOTES
SCHEDULES AND DETAILS

SHEET NUMBER

S401

COPYRIGHT ADD INC 2011

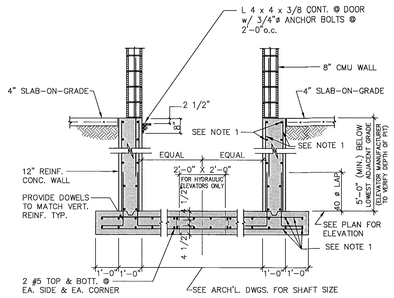

TYPICAL ELEVATOR PIT DETAIL
N.T.S.

NOTE 1: REFER TO 3/S503 & 4/S503 FOR DETAILS

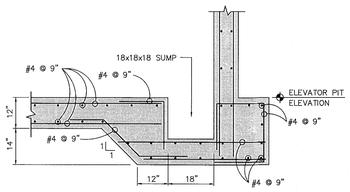

TYPICAL SUMP DETAIL
(AT SIDE WALL)

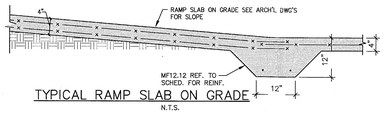

TYPICAL RAMP SLAB ON GRADE
N.T.S.

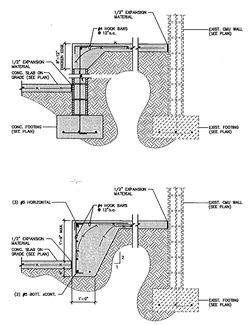

TYPICAL RAMP ON GRADE DETAILS

MTCI
PRIVATE PROVIDER SERVICES, LLC
Construction Plans Review, Inspections, Training & Consulting

	REVIEWER INITIALS	DATE REVIEWED
BUILDING		
STRUCTURAL	CMC	11/16/14
MECHANICAL		
ELECTRICAL		
PLUMBING		
SITE PLAN		

PERMIT SET
1/24/14

THESE ARE PROGRESS DRAWINGS, THEREFORE THEY ARE ISSUED PRIOR TO COMPLETION OF THE STRUCTURAL DESIGN, AND OTHER DESIGN DISCIPLINES. INCLUDING BUT NOT LIMITED TO ARCHITECTURAL OR MECHANICAL DESIGNS, AND AS SUCH, ARE INCOMPLETE BY NATURE FOR THE COMPREHENSIVE SCOPE OF THE PROJECT. ALLOWANCES FOR STRUCTURAL ELEMENTS REQUIRED DUE TO THE COMPLETION AND CROSS-COORDINATION OF ALL OTHER DISCIPLINES SHOULD BE MADE.

FREDERIC CARRIE
P.E. FLORIDA
REG. #50791

ONMJ&J
O'Donnell, Naccarato, Mignogna & Jackson
STRUCTURAL ENGINEERS
231 15TH STREET, SUITE 200
WEST PALM BEACH, FLORIDA 33401
(561) 835 - 9994 FAX (561) 835 - 8255
LIC. #00004386
JOB # 665.073

HADDON HALL
1500 COLLINS AVE
MIAMI BEACH, FL

KEYPLAN N.T.S.

REVISIONS

NO.	DESCRIPTION	ISSUE DATE
1	PROGRESS TO 100% CD	2/7/14
2	PERMIT REVIEW COMMENTS	3/14/14
7	POOL SUITES WALLS	4/4/14

PERMIT SET

NORTH SEAL

Jonathan Cardello
Lic. # AR93391

ADD Inc Architecture Interiors Planning

One Biscayne Tower
Suite 1670
Two South
Biscayne Boulevard
Miami, Fl 33131
T. 305.482.8700
F. 305.482.8770
www.addinc.com
Lic. # AA26001507

Boston Miami

JOB NUMBER: 13036.00
CHECKED BY:
ISSUE DATE: JANUARY 24, 2014
SCALE:

SHEET TITLE

TYPICAL NOTES
SCHEDULES AND DETAILS

SHEET NUMBER

S402 7

COPYRIGHT ADD INC 2011

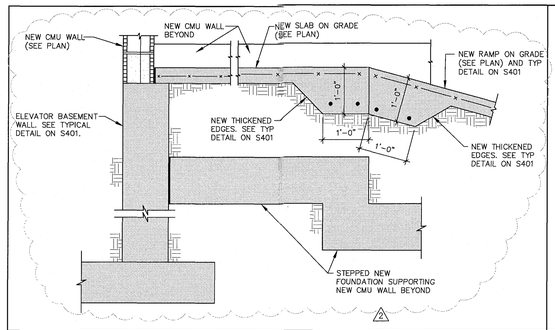

15 SECTION 3/4" = 1'-0"

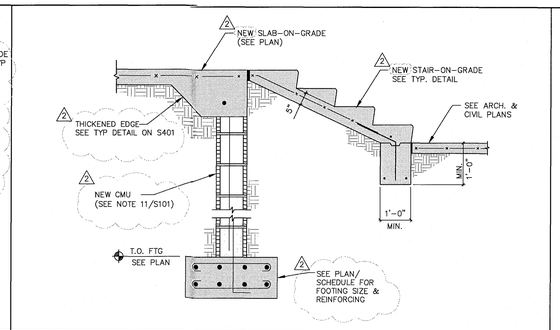

10 SECTION 3/4" = 1'-0"

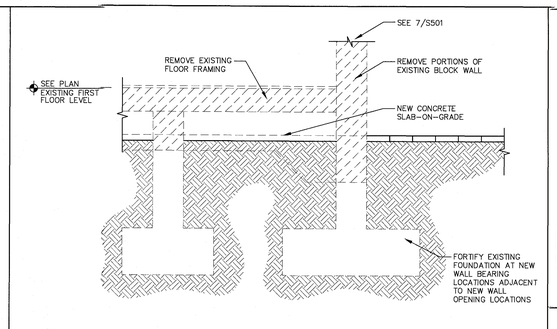

5 SECTION - CAMPTON APARTMENTS 3/4" = 1'-0"

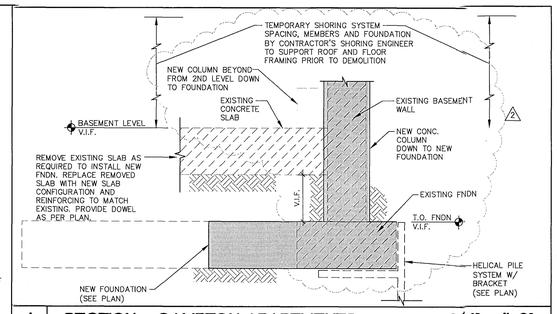

1 SECTION - CAMPTON APARTMENTS 3/4" = 1'-0"

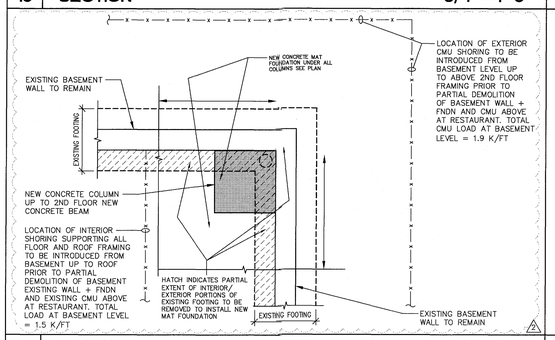

16 SECTION 1/2" = 1'-0"

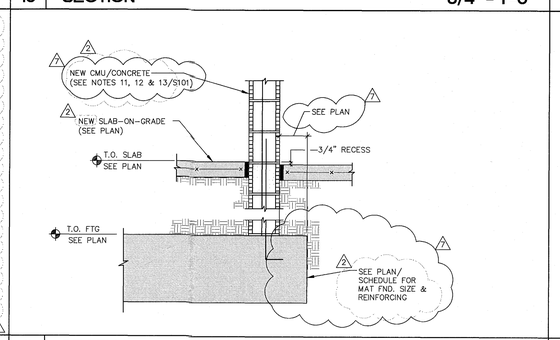

11 SECTION 3/4" = 1'-0"

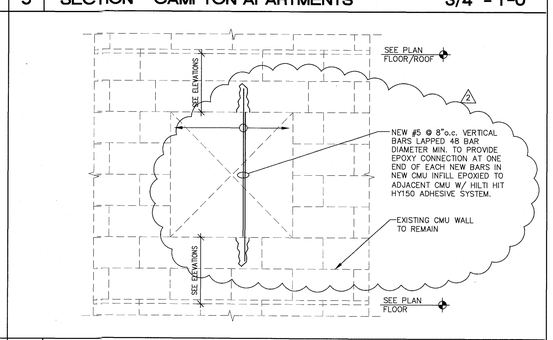

6 SECTION 3/4" = 1'-0"

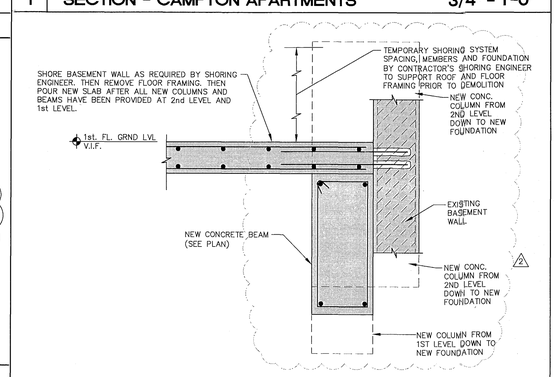

2 SECTION - CAMPTON APARTMENTS 3/4" = 1'-0"

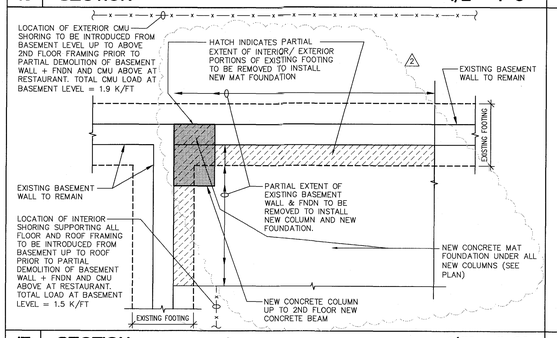

17 SECTION 1/2" = 1'-0"

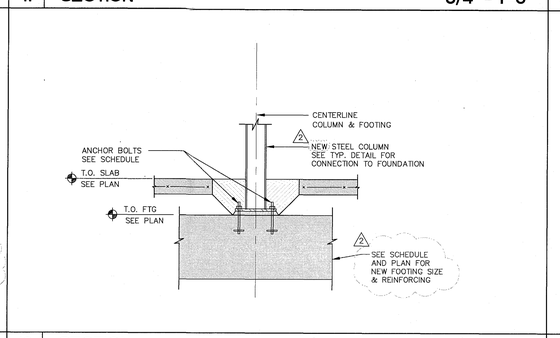

12 SECTION 3/4" = 1'-0"

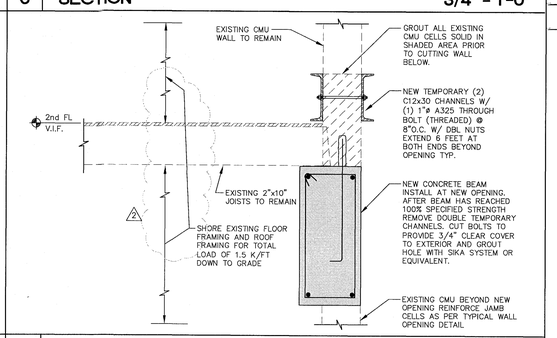

7 SECTION - CAMPTON APARTMENTS 3/4" = 1'-0"

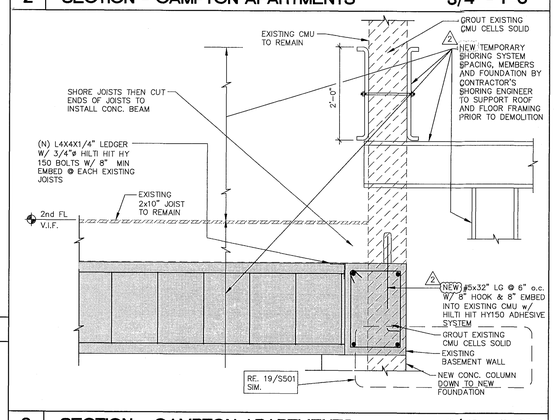

3 SECTION - CAMPTON APARTMENTS 3/4" = 1'-0"

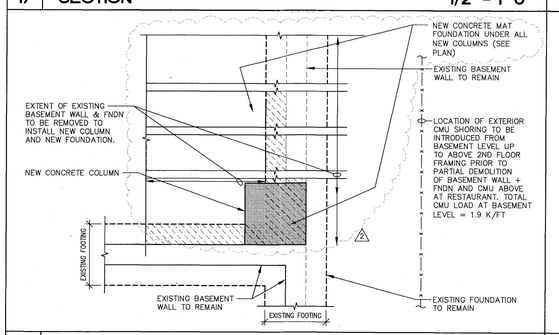

18 SECTION 1/2" = 1'-0"

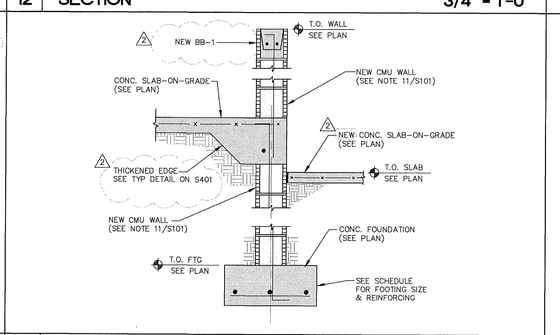

13 SECTION 3/4" = 1'-0"

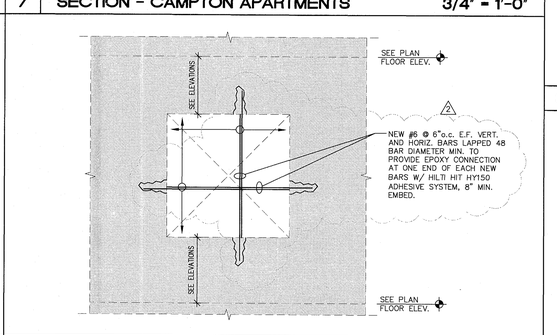

8 SECTION 3/4" = 1'-0"

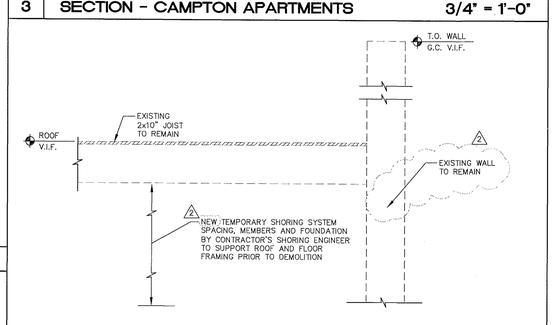

4 SECTION - CAMPTON APARTMENTS 3/4" = 1'-0"

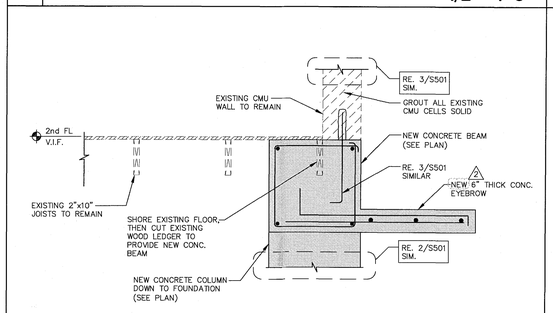

19 SECTION 3/4" = 1'-0"

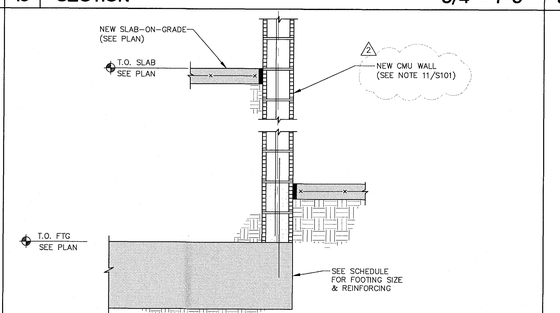

14 SECTION 3/4" = 1'-0"

9 SECTION 3/4" = 1'-0"

PERMIT SET
1/24/14

THESE ARE PROGRESS DRAWINGS, THEREFORE THEY ARE ISSUED PRIOR TO COMPLETION OF THE STRUCTURAL DESIGN, AND OTHER DESIGN DISCIPLINES, INCLUDING BUT NOT LIMITED TO ARCHITECTURAL OR MECHANICAL DESIGNS; AND AS SUCH, ARE INCOMPLETE BY NATURE FOR THE COMPREHENSIVE SCOPE OF THE PROJECT. ALLOWANCES FOR STRUCTURAL ELEMENTS REQUIRED DUE TO THE COMPLETION AND CROSS-COORDINATION OF ALL OTHER DISCIPLINES SHOULD BE MADE.

5-5-14
FREDERIC CARBIE
P.E. FLORIDA
REG. #60791

ONM&J
O'Donnell, Naccarato, Mignogna & Jackson
STRUCTURAL ENGINEERS
331 15TH STREET, SUITE 200
WEST PALM BEACH, FLORIDA 33401
(561) 835-9994 FAX (561) 835-8255
LIC. #0004386
JOB # 665.073

HADDON HALL
1500 COLLINS AVE
MIAMI BEACH, FL

KEYPLAN N.T.S.

REVISIONS

NO.	DESCRIPTION	ISSUE DATE
1	PROGRESS TO 100% CD	2/7/14
2	PERMIT REVIEW COMMENTS	3/14/14
3	POOL SUITES WALLS	4/4/14

MTCI
PRIVATE PROVIDER SERVICES, LLC
Construction Plans Review, Inspections, Testing & Consulting

	REVIEWER INITIALS	DATE REVIEWED
BUILDING		
STRUCTURAL	[illegible]	11/14/14
MECHANICAL		
ELECTRICAL		
PLUMBING		
SITE CIVIL		

PERMIT SET

NORTH SEAL

Jonathan Cardello
Lic. # AR93391

ADD Inc Architecture Interiors Planning

One Biscayne Tower
Suite 1670
Two South
Biscayne Boulevard
Miami, Fl 33131
T. 305.482.8700
F. 305.482.8770
www.addinc.com
Lic. # AA26001507

Boston Miami

JOB NUMBER: 13036.00
CHECKED BY:
ISSUE DATE: JANUARY 24, 2014
SCALE:

SHEET TITLE

SECTIONS

SHEET NUMBER

S501

COPYRIGHT ADD INC 2011

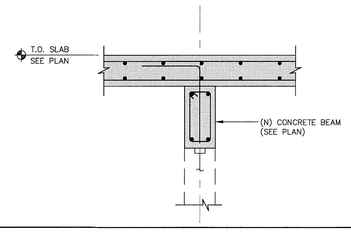

10 SECTION 3/4" = 1'-0"

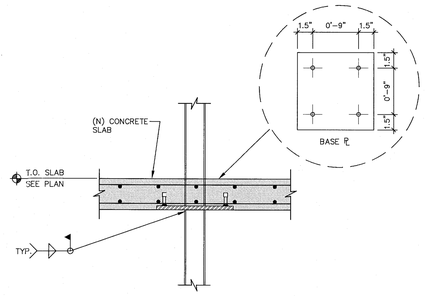

5 SECTION 3/4" = 1'-0"

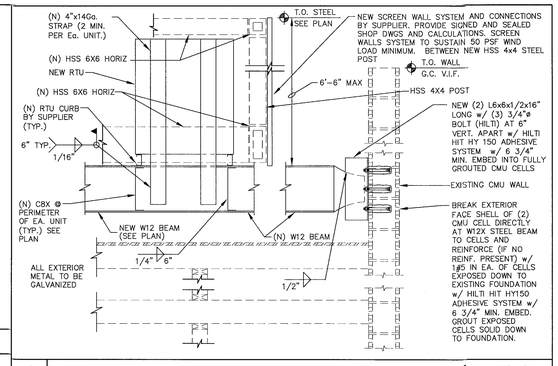

1 SECTION 3/4" = 1'-0"

15 SECTION 3/4" = 1'-0"

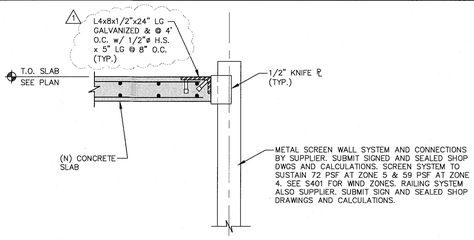

11 SECTION 3/4" = 1'-0"

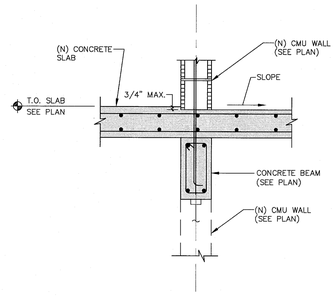

6 SECTION 3/4" = 1'-0"

2 SECTION 3/4" = 1'-0"

16 SECTION 3/4" = 1'-0"

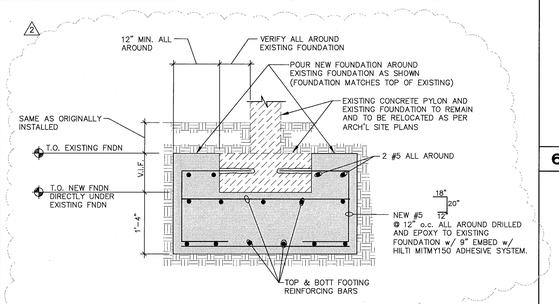

12 SECTION 3/4" = 1'-0"

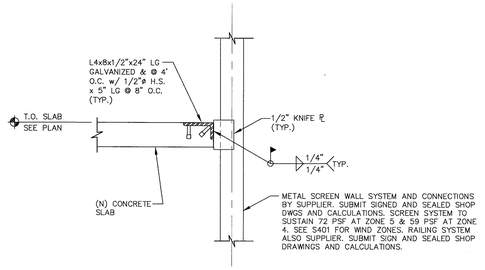

7 SECTION - CAMPTON APARTMENTS 3/4" = 1'-0"

3 SECTION 3/4" = 1'-0"

17 SECTION 3/4" = 1'-0"

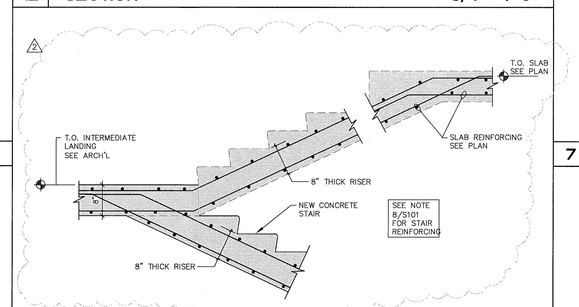

13 SECTION 3/4" = 1'-0"

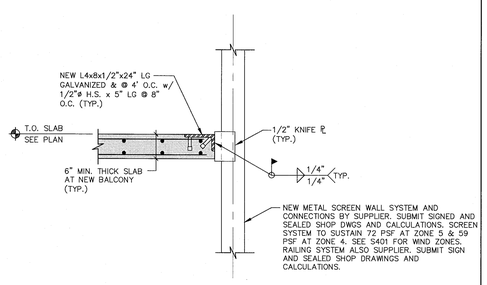

8 SECTION 3/4" = 1'-0"

4 SECTION 3/4" = 1'-0"

18 SECTION 3/4" = 1'-0"

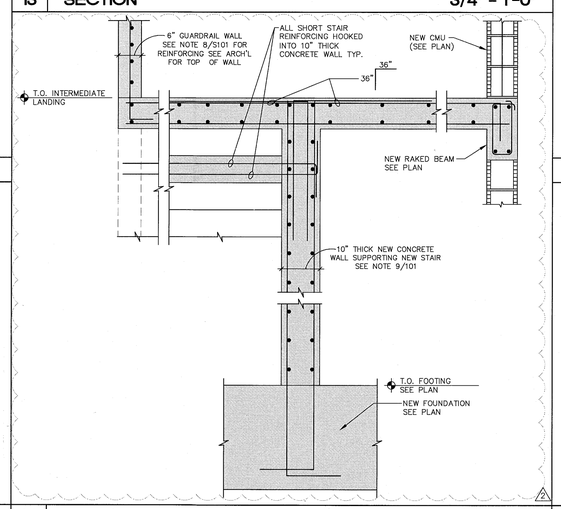

14 SECTION 3/4" = 1'-0"

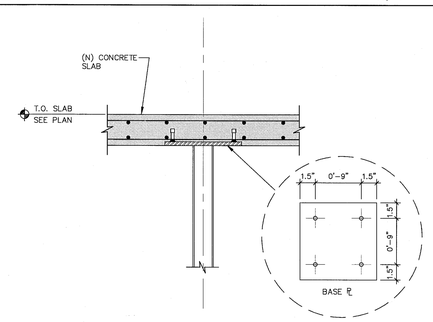

9 SECTION 3/4" = 1'-0"

19 SECTION 3/4" = 1'-0"

HADDON HALL
1500 COLLINS AVE

MIAMI BEACH, FL

KEYPLAN N.T.S.

REVISIONS

NO.	DESCRIPTION	ISSUE DATE
1	PROGRESS TO 100% CD	2/7/14
2	PERMIT REVIEW COMMENTS	3/14/14

PERMIT SET

NORTH SEAL

Jonathan Cardello
Lic. # AR93391

ADD Inc Architecture Interiors Planning

One Biscayne Tower
Suite 1670
Two South
Biscayne Boulevard
Miami, Fl 33131
T. 305.482.8700
F. 305.482.8770
www.addinc.com
Lic. # AA26001507

Boston Miami

MTCI
PRIVATE PROVIDER SERVICES, LLC
Construction Plans Review, Inspections, Testing & Consulting

	REVIEWER INITIALS	DATE REVIEWED
BUILDING		
STRUCTURAL	CM	1/30/14
MECHANICAL		
ELECTRICAL		
PLUMBING		
SITE CIVIL		

JOB NUMBER: 13036.00
CHECKED BY:
ISSUE DATE: JANUARY 24, 2014
SCALE:

SHEET TITLE

SECTIONS

PERMIT SET
1/24/14

THESE ARE PROGRESS DRAWINGS, THEREFORE THEY ARE ISSUED PRIOR TO COMPLETION OF THE STRUCTURAL DESIGN, AND OTHER DESIGN DISCIPLINES. INCLUDING BUT NOT LIMITED TO ARCHITECTURAL OR MECHANICAL DESIGNS; AND AS SUCH, ARE INCOMPLETE BY NATURE FOR THE COMPREHENSIVE SCOPE OF THE PROJECT. ALLOWANCES FOR STRUCTURAL ELEMENTS REQUIRED DUE TO THE COMPLETION AND CROSS-COORDINATION OF ALL OTHER DISCIPLINES SHOULD BE MADE.

FREDERIC CARRIE
P.E. FLORIDA
REG. #60791

ONM&J
O'Donnell, Naccarato, Mignogna & Jackson
STRUCTURAL ENGINEERS
371 13TH STREET, SUITE 200
WEST PALM BEACH, FLORIDA 33401
(561) 835 - 9994 FAX (561) 835 - 8255
LIC. #0004386
JOB # 665.073

SHEET NUMBER

S502

COPYRIGHT ADD INC 2011

14 SECTION 3/4" = 1'-0"

15 SECTION 3/4" = 1'-0"

16 SECTION 3/4" = 1'-0"

17 SECTION 3/4" = 1'-0"

18 SECTION 3/4" = 1'-0"

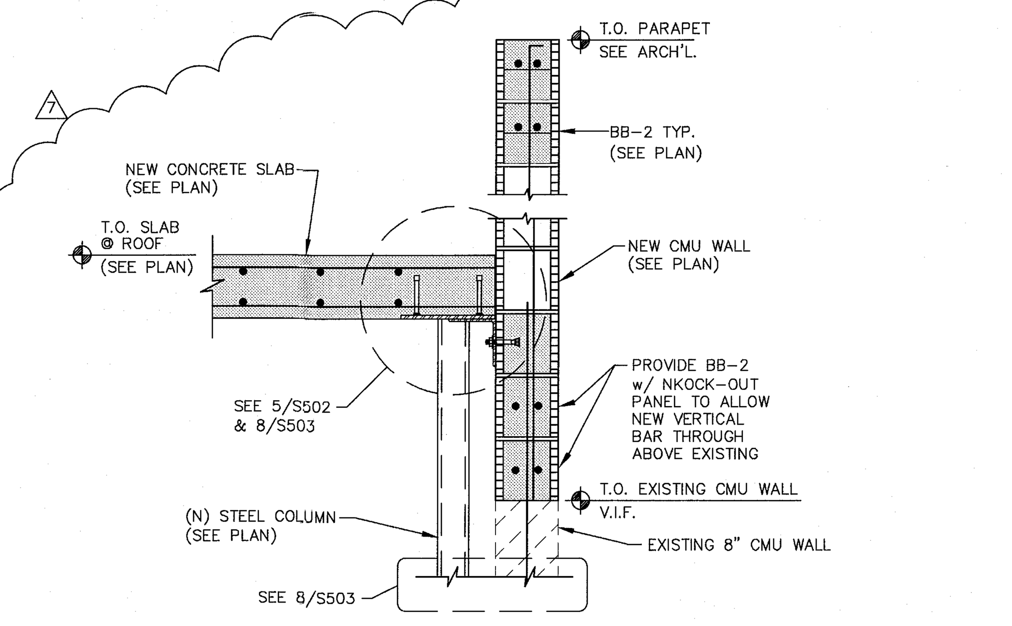

9 SECTION 3/4" = 1'-0"

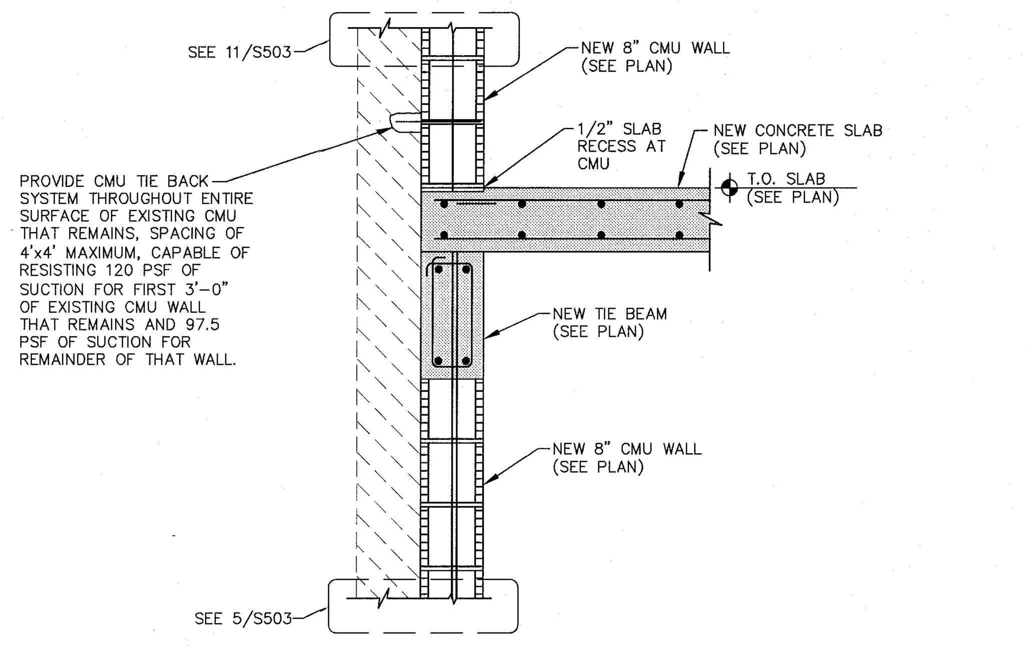

10 SECTION 3/4" = 1'-0"

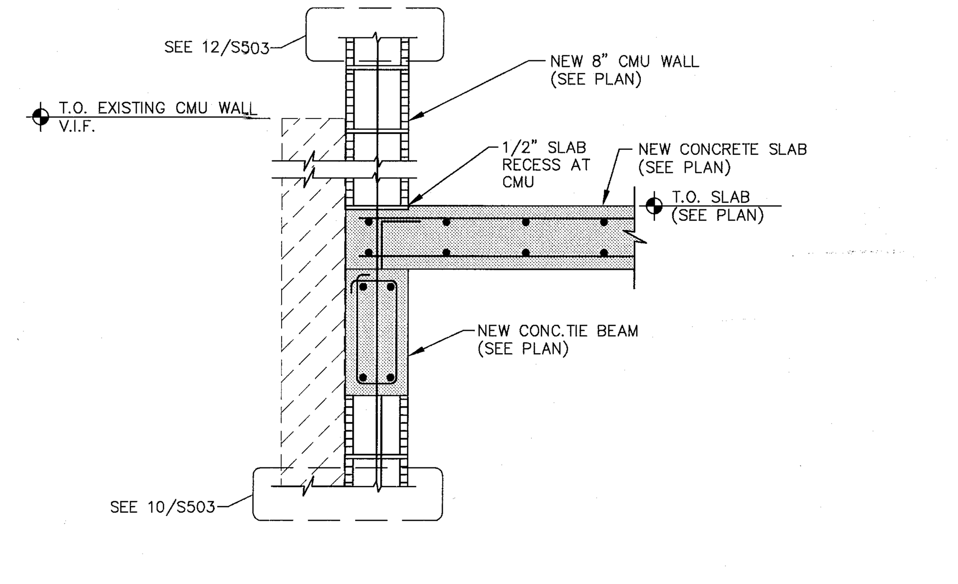

11 SECTION 3/4" = 1'-0"

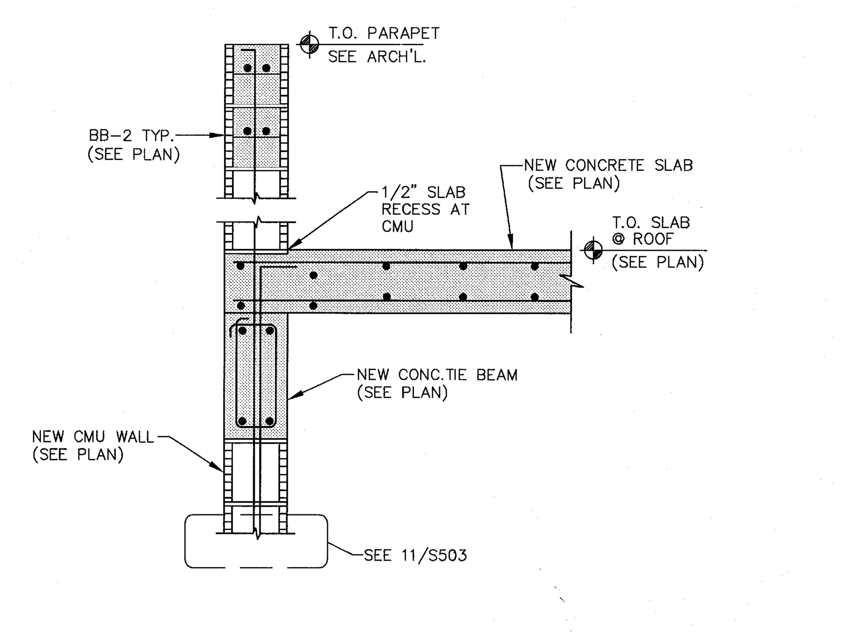

12 SECTION 3/4" = 1'-0"

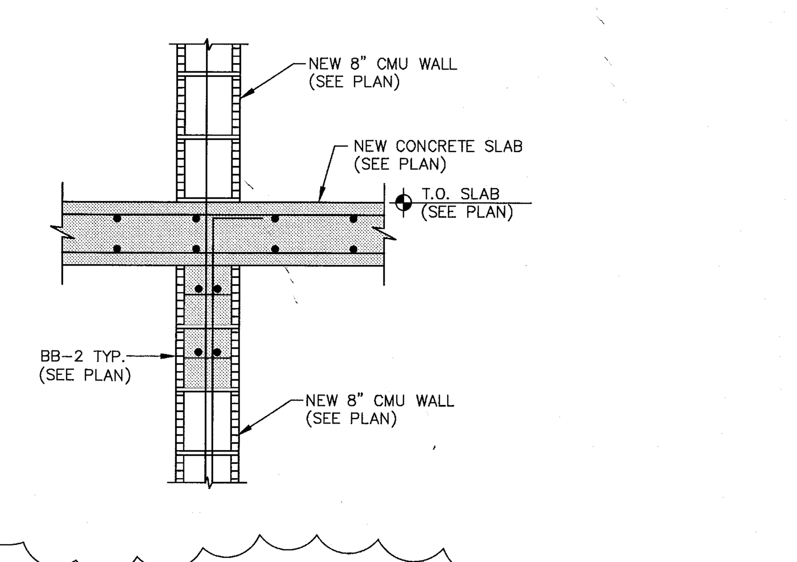

13 SECTION 3/4" = 1'-0"

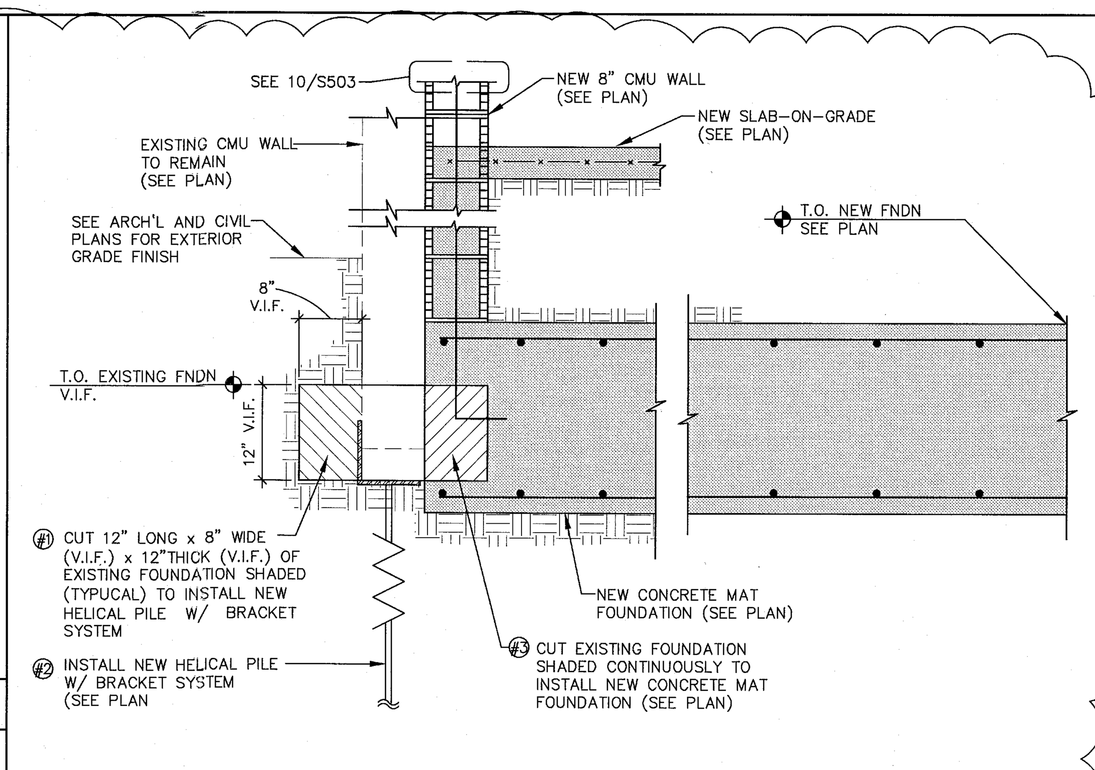

5 SECTION 3/4" = 1'-0"

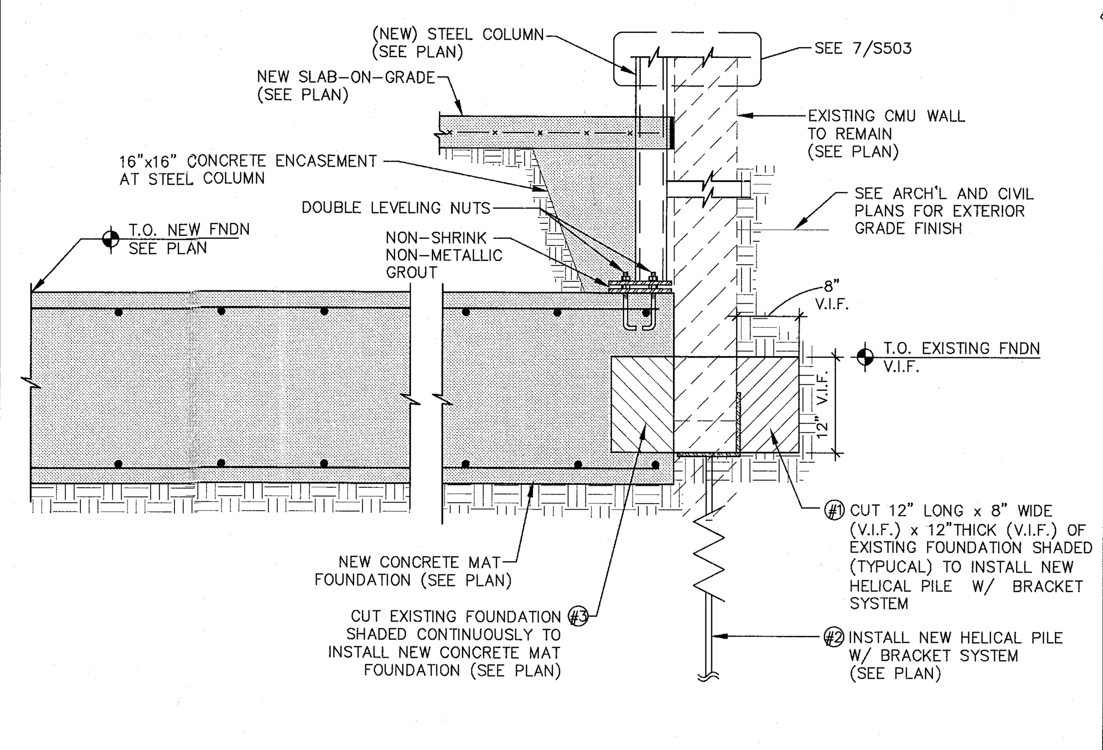

6 SECTION 3/4" = 1'-0"

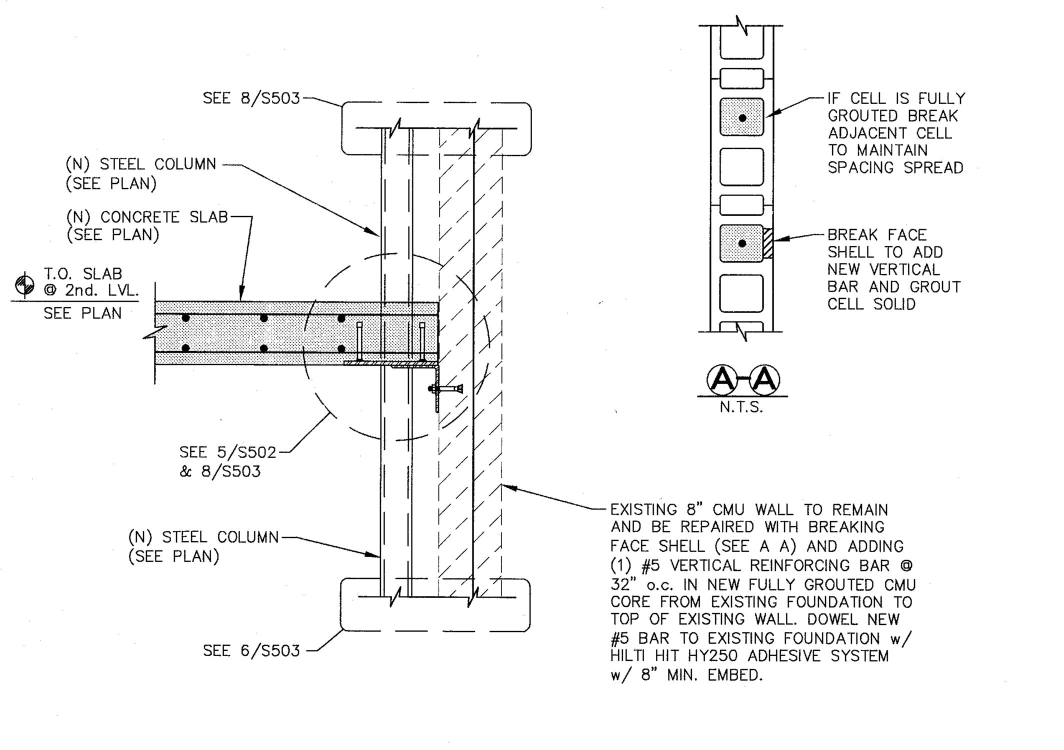

7 SECTION 3/4" = 1'-0"

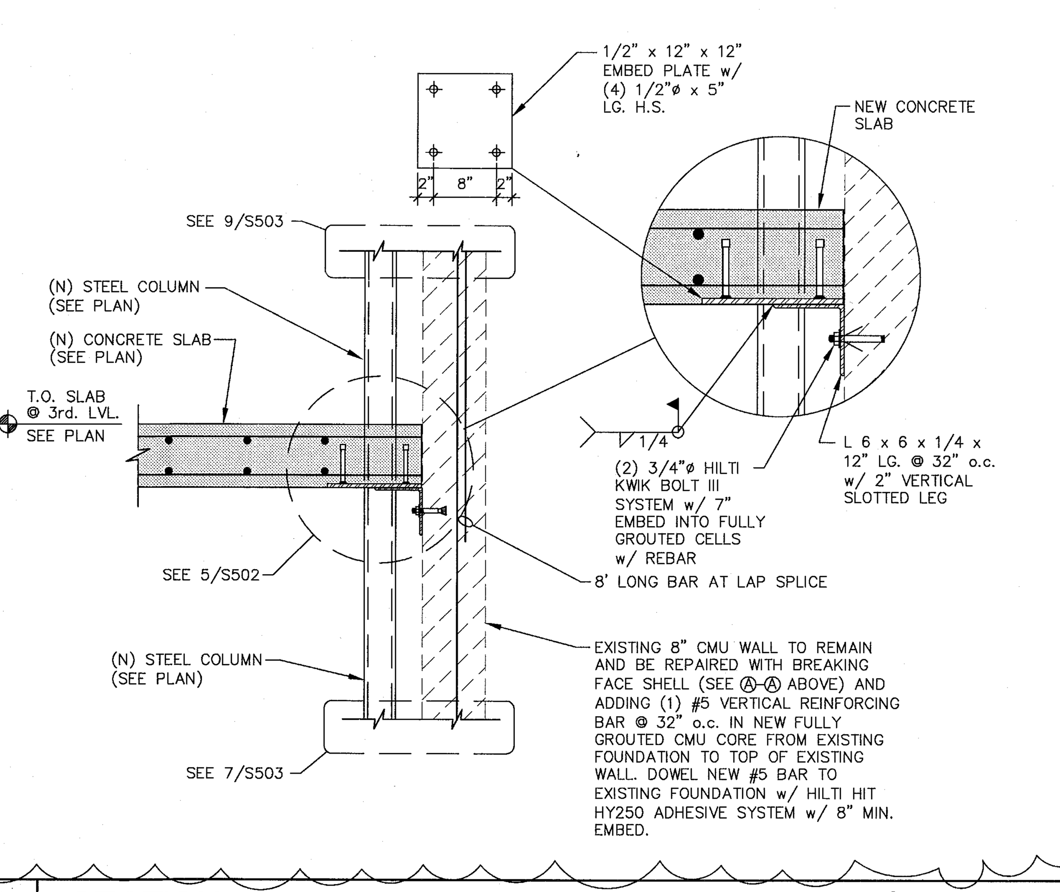

8 SECTION 3/4" = 1'-0"

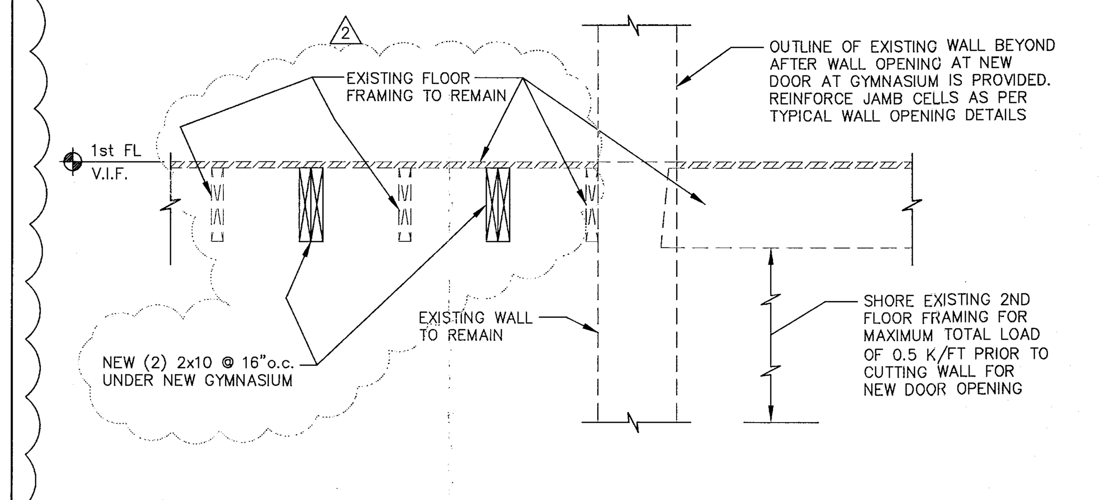

1 SECTION 3/4" = 1'-0"

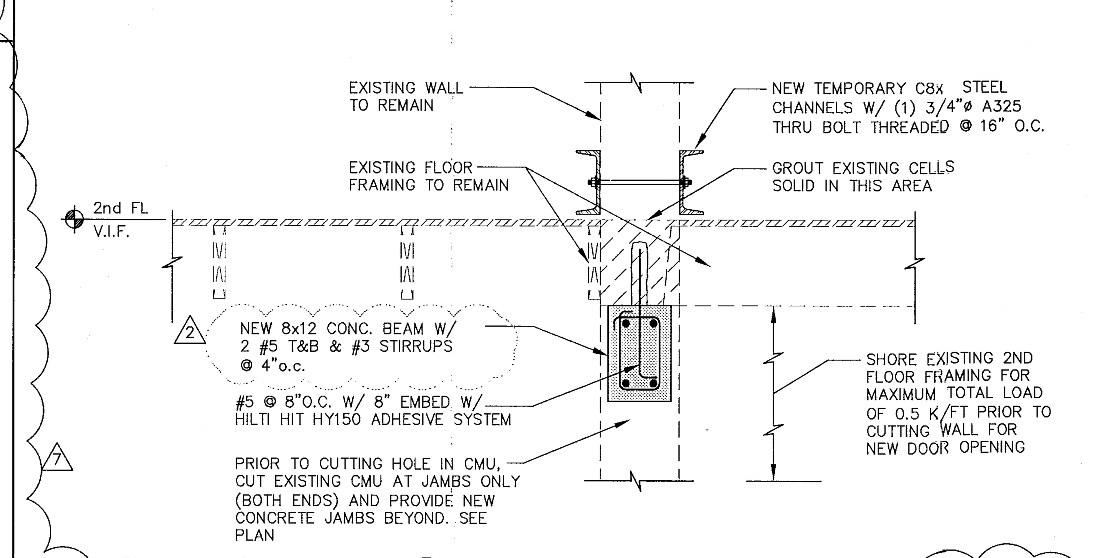

2 SECTION 3/4" = 1'-0"

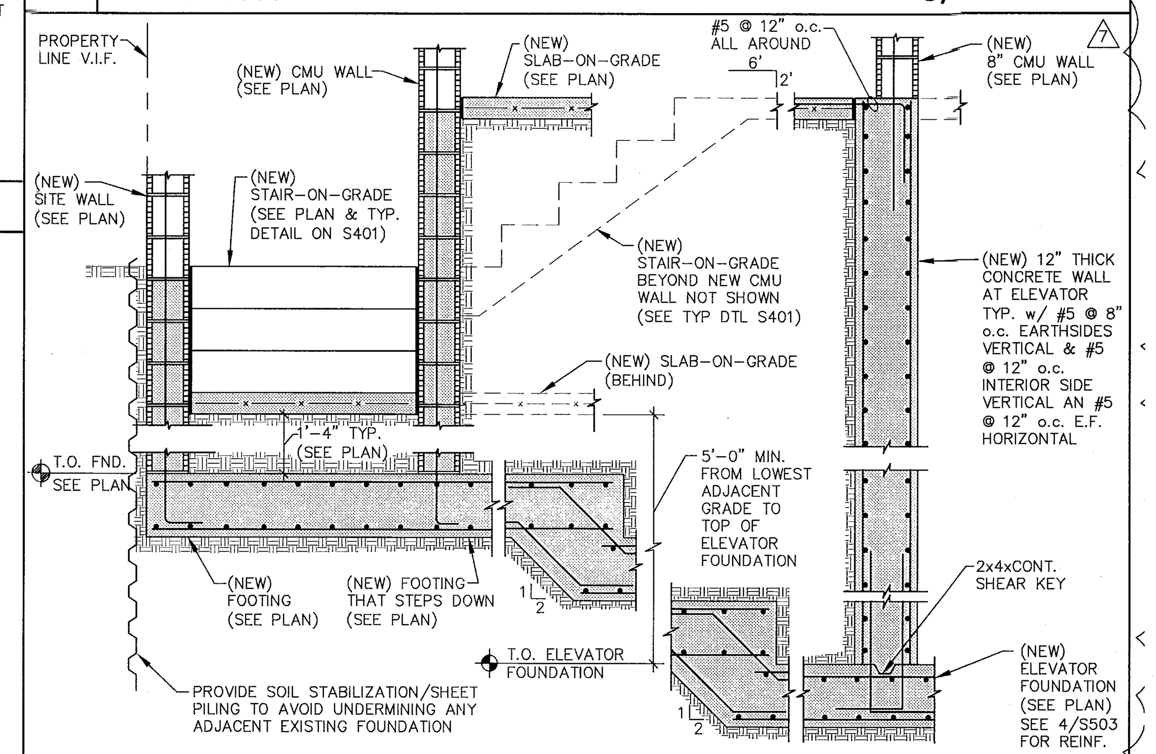

3 SECTION 1/2" = 1'-0"

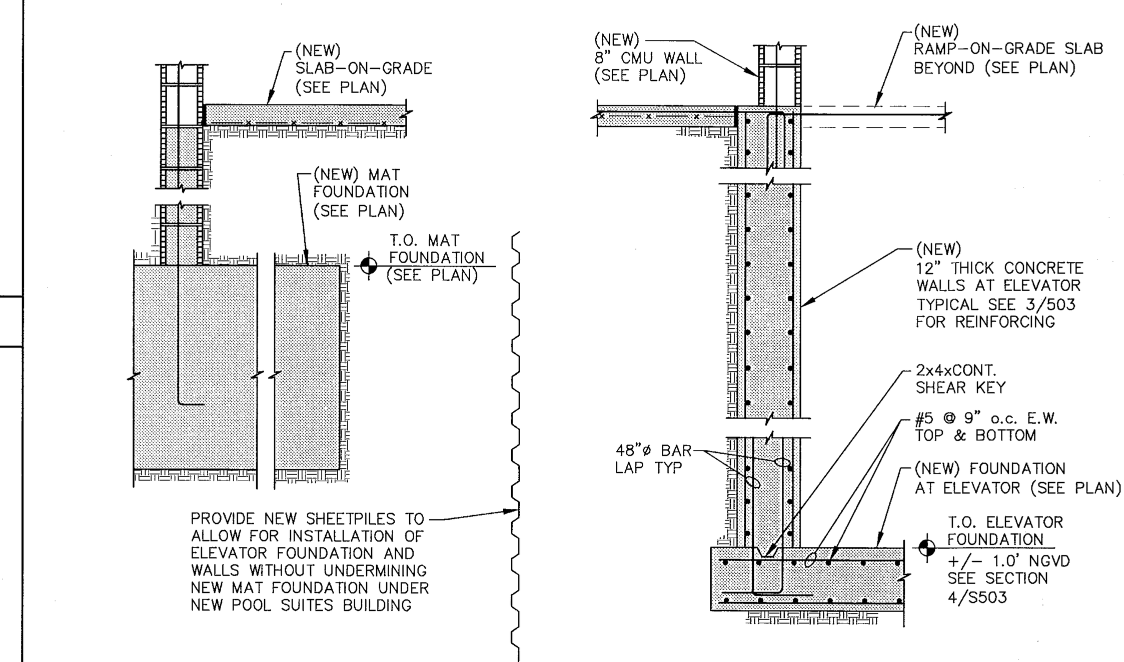

4 SECTION 1/2" = 1'-0"

PERMIT SET
1/24/14

THESE ARE PROGRESS DRAWINGS, THEREFORE THEY ARE ISSUED PRIOR TO COMPLETION OF THE STRUCTURAL DESIGN, AND OTHER DESIGN DISCIPLINES. INCLUDING BUT NOT LIMITED TO ARCHITECTURAL OR MECHANICAL DESIGNS; AND AS SUCH, ARE INCOMPLETE BY NATURE FOR THE COMPREHENSIVE SCOPE OF THE PROJECT. ALLOWANCES FOR STRUCTURAL ELEMENTS REQUIRED DUE TO THE COMPLETION AND CROSS-COORDINATION OF ALL OTHER DISCIPLINES SHOULD BE MADE.

5-5-14
FREDERIC CARRIE
P.E. FLORIDA
REG. #60791

ONM&J
O'Donnell, Naccarato, Mignogna Jackson
STRUCTURAL ENGINEERS
321 15TH STREET, SUITE 200
WEST PALM BEACH, FLORIDA 33401
(561) 835-9994 FAX (561) 835-8255
LIC. #0004386
JOB # 665.073

HADDON HALL
1500 COLLINS AVE
MIAMI BEACH, FL

KEYPLAN N.T.S.

REVISIONS

NO.	DESCRIPTION	ISSUE DATE
1	PROGRESS TO 100% CD	2/7/14
2	PERMIT REVIEW COMMENTS	3/14/14
7	POOL SUITES WALLS	4/4/14

MTCI
PRIVATE PROVIDER SERVICES, LLC
Construction Plans Review, Inspections, Testing & Consulting

	REVIEWER INITIALS	DATE REVIEWED
BUILDING		
STRUCTURAL	CMC	11/10/14
MECHANICAL		
ELECTRICAL		
PLUMBING		
SITE CIVIL		

PERMIT SET

NORTH SEAL

Jonathan Cardello
Lic. # AR93391

ADD Inc Architecture Interiors Planning

One Biscayne Tower
Suite 1670
Two South
Biscayne Boulevard
Miami, Fl 33131
T. 305.482.8700
F. 305.482.8770
www.addinc.com
Lic. # AA26001507

Boston Miami

JOB NUMBER: 13036.00
CHECKED BY:
ISSUE DATE: JANUARY 24, 2014
SCALE:

SHEET TITLE

SECTIONS

SHEET NUMBER

S503

COPYRIGHT ADD INC 2011

DEMOLITION DRAWING NOTES
1 PHASE COORDINATION OF DEMOLITION TO BE DETERMINED BY SURVEY OR EXISTING EQUIPMENT TO REMAIN.
2 REMOVE AND COORDINATE DISPOSAL OF THE EXISTING HVAC EQUIPMENT TO BE DEMOLISHED WITH GENERAL CONTRACTOR.
3 EXISTING POOL SUITES BUILDING TO BE DEMOLISHED IN ITS ENTIRELY.

1

HVAC DESIGN REQUIREMENTS

HVAC DESIGN REQUIRES	YES	NO
DUCT SMOKE DETECTOR	X	
FIRE DAMPER(S)		X
SMOKE DAMPER(S)		X
FIRE RATED ENCLOSURE		X
FIRE RATED ROOF/FLOOR CEILING ASSEMBLY		X
FIRE STOPPING		X
SMOKE CONTROL		X

2

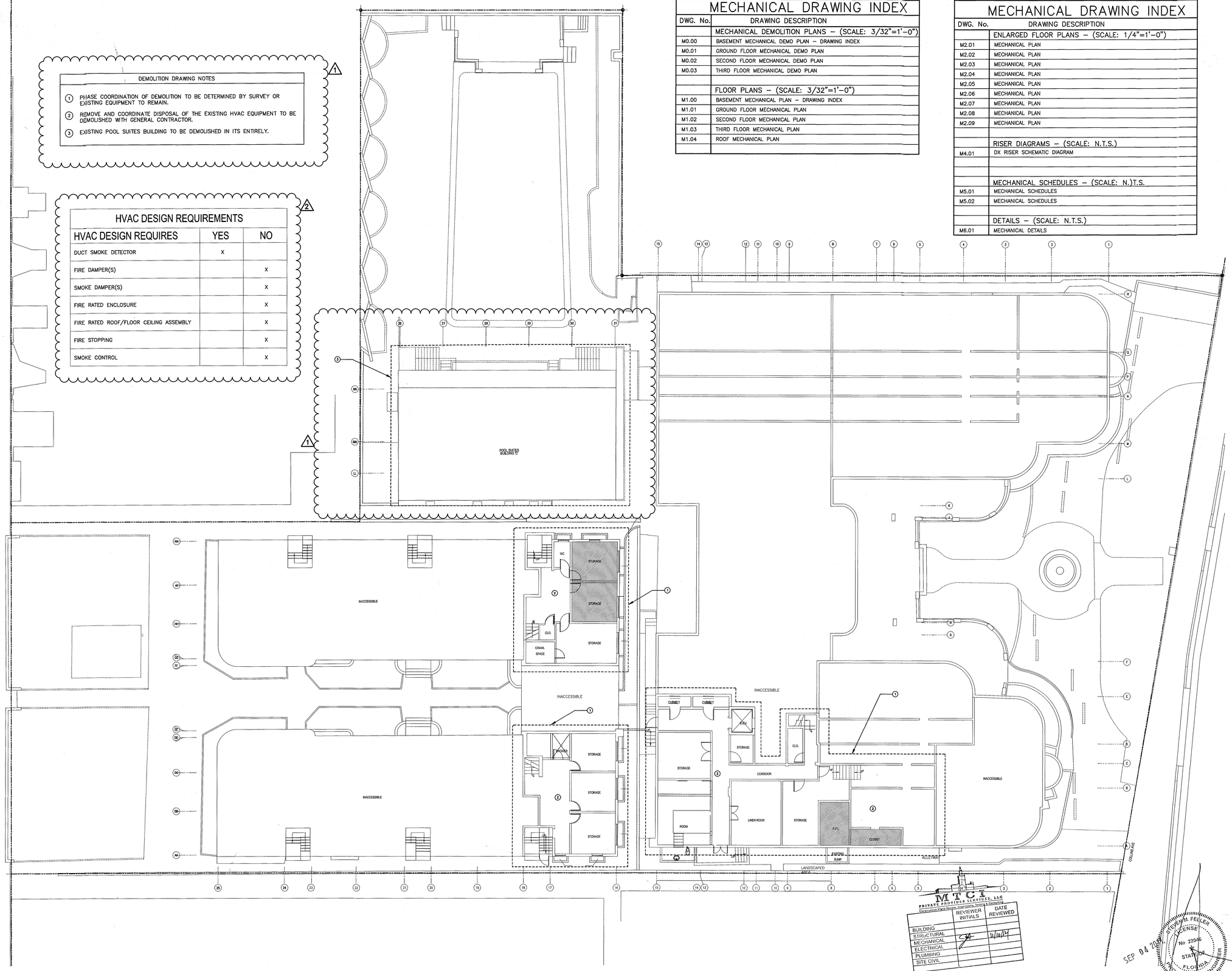

BASEMENT MECHANICAL DEMOLITION PLAN

SCALE: 3/32"=1'-0"

MECHANICAL DRAWING INDEX

DWG. No.	DRAWING DESCRIPTION
	MECHANICAL DEMOLITION PLANS – (SCALE: 3/32"=1'-0")
M0.00	BASEMENT MECHANICAL DEMO PLAN – DRAWING INDEX
M0.01	GROUND FLOOR MECHANICAL DEMO PLAN
M0.02	SECOND FLOOR MECHANICAL DEMO PLAN
M0.03	THIRD FLOOR MECHANICAL DEMO PLAN
	FLOOR PLANS – (SCALE: 3/32"=1'-0")
M1.00	BASEMENT MECHANICAL PLAN – DRAWING INDEX
M1.01	GROUND FLOOR MECHANICAL PLAN
M1.02	SECOND FLOOR MECHANICAL PLAN
M1.03	THIRD FLOOR MECHANICAL PLAN
M1.04	ROOF MECHANICAL PLAN

MECHANICAL DRAWING INDEX

DWG. No.	DRAWING DESCRIPTION
	ENLARGED FLOOR PLANS – (SCALE: 1/4"=1'-0")
M2.01	MECHANICAL PLAN
M2.02	MECHANICAL PLAN
M2.03	MECHANICAL PLAN
M2.04	MECHANICAL PLAN
M2.05	MECHANICAL PLAN
M2.06	MECHANICAL PLAN
M2.07	MECHANICAL PLAN
M2.08	MECHANICAL PLAN
M2.09	MECHANICAL PLAN
	RISER DIAGRAMS – (SCALE: N.T.S.)
M4.01	DX RISER SCHEMATIC DIAGRAM
	MECHANICAL SCHEDULES – (SCALE: N.)T.S.
M5.01	MECHANICAL SCHEDULES
M5.02	MECHANICAL SCHEDULES
	DETAILS – (SCALE: N.T.S.)
M6.01	MECHANICAL DETAILS

MTCI PRIVATE PROVIDER SERVICES, LLC
Construction Plans Review, Inspections, Training & Consulting

	REVIEWER INITIALS	DATE REVIEWED
BUILDING		
STRUCTURAL		
MECHANICAL	CJG	11/10/14
ELECTRICAL		
PLUMBING		
SITE CIVIL		

SEP 04 2014
STEVEN M. FELLER
LICENSE
No 22046
STATE OF FLORIDA
PROFESSIONAL ENGINEER
APPROVED
MIAMI BEACH
FIRE DEPARTMENT

STEVEN FELLER P.E.,PL
FLORIDA P.E. Reg. # 22046
Certificate of Authorization # 00003427
500 N.E. THIRD AVENUE
FORT LAUDERDALE, FLORIDA 33301
PH: 954.467.1402 FAX: 954.467.5752
e-mail: fellerpe@fellerpe.com
JOB # 13153

HADDON HALL
1500 COLLINS AVE
MIAMI BEACH, FL

KEYPLAN N.T.S.

REVISIONS		
NO.	DESCRIPTION	ISSUE DATE
1	PROGRESS 100% CD SET	02-07-14
2	PERMIT REVIEW COMMENTS	03-14-14

100% CONSTRUCTION DOCUMENT SET

NORTH SEAL

Jonathan Cardello
Lic. # AR93391

ADD Inc Architecture Interiors Planning

One Biscayne Tower
Suite 1670
Two South
Biscayne Boulevard
Miami, Fl 33131
T. 305.482.8700
F. 305.482.8770
www.addinc.com
Lic. # AA26001507

Boston Miami

JOB NUMBER:	13036.00
CHECKED BY:	
ISSUE DATE:	MARCH 14, 2014
SCALE:	AS NOTED

SHEET TITLE

BASEMENT DEMOLITION PLAN

SHEET NUMBER:

M0.00

COPYRIGHT ADD INC 2011

DEMOLITION DRAWING NOTES

1. REMOVE EXISTING WINDOW UNITS AND REMOVE FROM SITE. COORDINATE DISPOSAL OF THE EXISTING HVAC EQUIPMENT TO BE DEMOLISHED WITH GENERAL CONTRACTOR. (TYPICAL FOR ALL WINDOW UNITS)
2. REMOVE EXISTING VENTIALTION DUCTWORK AND FANS AT EXISTING CAMPTORN APARTMENS ONLY. COORDINATE DEMOLITION OF THE EXISTING HVAC EQUIPMENT ON THE ROOF WITH NEW LAYOUT.
3. REMOVE EXISTING AHU/CU AT LOUNGE AND DISCONNECT FROM EXISTING DUCTWORK. COORDINATE DEMOLITION OF THE EXISTING HVAC EQUIPMENT ON THE SITE WITH NEW LAYOUT.
4. EXISTING VENTILATION DUCTWORK AND RISER TO REMAIN AT THIS BATHROOMS IN CAMPTON APARTMENTS ONLY. COORDINATE DEMOLITION OF THE EXISTING HVAC EQUIPMENT ON THE ROOF WITH NEW LAYOUT.
5. EXISTING VENTILATION DUCTWORK AND RISER TO REMAIN AT THESE BATHROOMS IN HADDON HALL GUESTROOMS ONLY. COORDINATE DEMOLITION OF THE EXISTING HVAC EQUIPMENT ON THE ROOF WITH NEW LAYOUT. RELOCATE SELECT WALL VENTILATION GRILLES WHEREIN CONFLICT WITH NEW PROPOSED SECONDARY CEILING.
6. EXISTING VENTILATION DUCTWORK AND RISER TO REMAIN AT THESE COMMON AREA BATHROOMS IN HADDON HALL BUILDING. COORDINATE DEMOLITION OF THE EXISTING HVAC EQUIPMENT ON THE ROOF WITH NEW LAYOUT.
6. EXISTING HVAC EQUIPMENT, DUCTWORK AND RISER TO BE DEMOLISHED.
7. EXISTING POOL SUITES BUILDING TO BE DEMOLISHED IN ITS ENTIRELY.

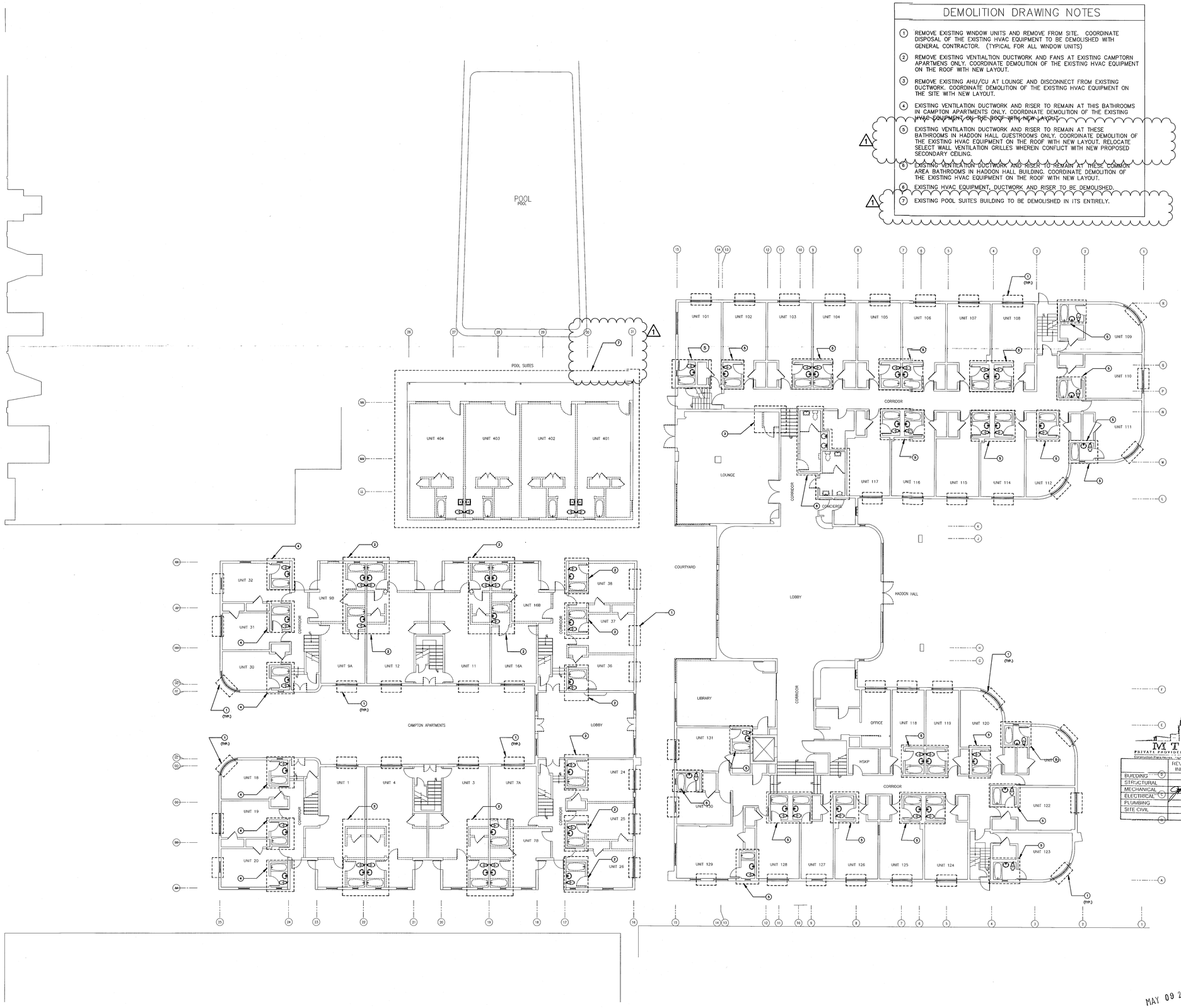

GROUND FLOOR MECHANICAL DEMOLITION PLAN

SCALE:3/32"=1'-0"

HADDON HALL
1500 COLLINS AVE

MIAMI BEACH, FL

KEYPLAN N.T.S.

REVISIONS

NO.	DESCRIPTION	ISSUE DATE
1	PROGRESS 100% CD SET	02-07-14

100% CONSTRUCTION DOCUMENT SET

NORTH SEAL

Jonathan Cardello
Lic. # AR93391

ADD Inc Architecture Interiors Planning

One Biscayne Tower
Suite 1670
Two South
Biscayne Boulevard
Miami, Fl 33131
T. 305.482.8700
F. 305.482.8770
www.addinc.com
Lic. # AA26001507

Boston Miami

MTCI
PRIVATE PROVIDER SERVICES, LLC
Construction Plans Review, Inspections, Training & Consulting

	REVIEWER INITIALS	DATE REVIEWED
BUILDING B		
STRUCTURAL		
MECHANICAL M		11/10/14
ELECTRICAL E		
PLUMBING		
SITE CIVIL		
FIRE FIRE		

JOB NUMBER:	13036.00
CHECKED BY:	
ISSUE DATE:	MARCH 14, 2014
SCALE:	AS NOTED

SHEET TITLE

GROUND FLOOR DEMOLITION PLAN

MAY 09 2014

STEVEN M. FELLER
LICENSED
No. 22046
STATE OF FLORIDA
PROFESSIONAL ENGINEER

APPROVED MIAMI BEACH FIRE DEPARTMENT

STEVEN FELLER P.E., P.L
FLORIDA P.E. Reg. # 22046
Certificate of Authorization # 00003427
500 N.E. THIRD AVENUE
FORT LAUDERDALE, FLORIDA 33301
PH: 954.467.1402 FAX: 954.467.5752
e-mail: feller pe@fellerpe.com
JOB # 13133

SHEET NUMBER

M0.01

COPYRIGHT ADD INC 2011

HADDON HALL
1500 COLLINS AVE

MIAMI BEACH, FL

KEYPLAN N.T.S.

DEMOLITION DRAWING NOTES

1. REMOVE EXISTING WINDOW UNITS AND REMOVE FROM SITE. COORDINATE DISPOSAL OF THE EXISTING HVAC EQUIPMENT TO BE DEMOLISHED WITH GENERAL CONTRACTOR. (TYPICAL FOR ALL WINDOW UNITS)
2. REMOVE EXISTING VENTILATION DUCTWORK AND FANS AT EXISTING CAMPTON APARTMENTS ONLY. COORDINATE DEMOLITION OF THE EXISTING HVAC EQUIPMENT ON THE ROOF WITH NEW LAYOUT.
3. REMOVE EXISTING AHU/CU AT LOUNGE AND DISCONNECT FROM EXISTING DUCTWORK TO REMAIN. COORDINATE DEMOLITION OF THE EXISTING HVAC EQUIPMENT ON THE SITE WITH NEW LAYOUT.
4. EXISTING VENTILATION DUCTWORK AND RISER TO REMAIN AT THESE BATHROOMS IN HADDON HALL GUESTROOMS ONLY. COORDINATE DEMOLITION OF THE EXISTING HVAC EQUIPMENT ON THE ROOF WITH NEW LAYOUT. RELOCATE SELECT WALL VENTILATION GRILLES WHEREIN CONFLICT WITH NEW PROPOSED SECONDARY CEILING. 1
5. EXISTING VENTILATION DUCTWORK AND RISER TO REMAIN AT THESE BATHROOMS IN HADDON HALL GUESTROOMS ONLY. COORDINATE DEMOLITION OF THE EXISTING HVAC EQUIPMENT ON THE ROOF WITH NEW LAYOUT.
6. EXISTING STRUCTURE TO REMAIN. EXISTING HVAC, VENTILATION DUCTWORK AND RISER TO BE DEMOLISHED.
7. EXISTING POOL SUITES BUILDING TO BE DEMOLISHED IN ITS ENTIRELY. 1

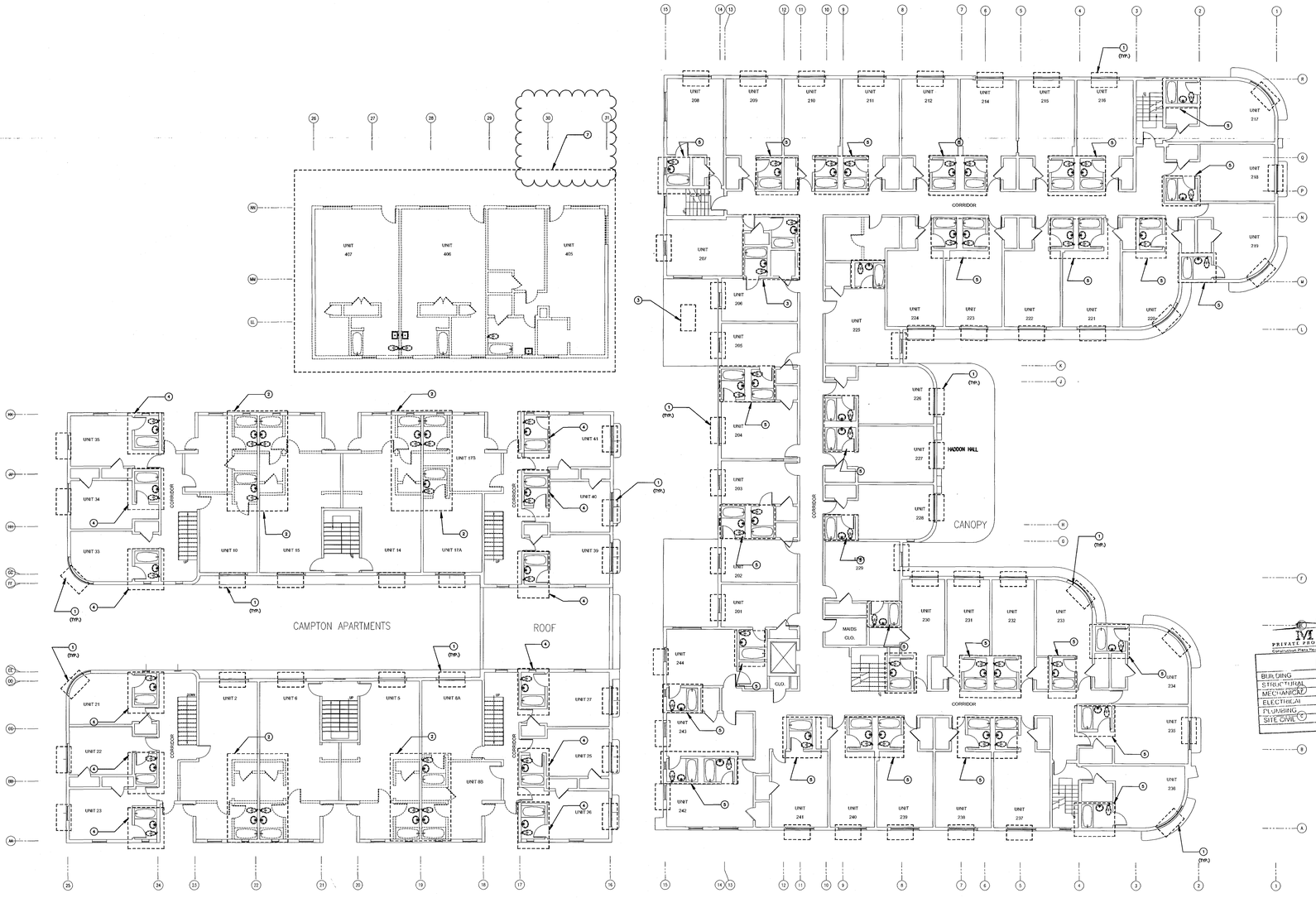

SECOND FLOOR MECHANICAL DEMOLITION PLAN

SCALE:3/32"=1'-0"

REVISIONS

NO.	DESCRIPTION	ISSUE DATE
1	PROGRESS 100% CD SET	02-07-14

100% CONSTRUCTION DOCUMENT SET

NORTH SEAL

Jonathan Cardello
Lic. # AR93391

MTCI PRIVATE PROVIDER SERVICES, LLC
Construction Plans Review, Inspections, Training & Certification

	REVIEWER INITIALS	DATE REVIEWED
BUILDING		
STRUCTURAL		
MECHANICAL		11/10/14
ELECTRICAL		
PLUMBING		
SITE CIVIL		

ADD Inc Architecture Interiors Planning

One Biscayne Tower
Suite 1670
Two South
Biscayne Boulevard
Miami, Fl 33131
T. 305.482.8700
F. 305.482.8770
www.addinc.com
Lic. # AA26001507

Boston Miami

JOB NUMBER: 13036.00
CHECKED BY:
ISSUE DATE: MARCH 14, 2014
SCALE: AS NOTED

SHEET TITLE

SECOND FLOOR DEMOLITION PLAN

MAY 09 2014

STEVEN M. FELLER LICENSE No. 22046 STATE OF FLORIDA PROFESSIONAL ENGINEER

STEVEN FELLER P.E.,PL
FLORIDA P.E. Reg. # 22046
Certificate of Authorization # 00003427
500 N.E. THIRD AVENUE
FORT LAUDERDALE, FLORIDA 33301
PH: 954.467.1402 FAX: 954.467.5752
e-mail: fellerpe@fellerpe.com
JOB # 13153

APPROVED MIAMI BEACH FIRE DEPARTMENT

SHEET NUMBER

M0.02

COPYRIGHT ADD INC 2011

DEMOLITION DRAWING NOTES

1. REMOVE EXISTING WINDOW UNITS AND REMOVE FROM SITE. COORDINATE DISPOSAL OF THE EXISTING HVAC EQUIPMENT TO BE DEMOLISHED WITH GENERAL CONTRACTOR. (TYPICAL FOR ALL WINDOW UNITS)
2. REMOVE EXISTING VENTILATION DUCTWORK AND FANS AT EXISTING CAMPTORN APARTMENTS ONLY. COORDINATE DEMOLITION OF THE EXISTING HVAC EQUIPMENT ON THE ROOF WITH NEW LAYOUT.
3. REMOVE EXISTING AHU/CU AT LIBRARY AND LOUNGE AND DISCONNECT FROM EXISTING DUCTWORK TO REMAIN. COORDINATE DEMOLITION OF THE EXISTING HVAC EQUIPMENT ON THE SITE WITH NEW LAYOUT.
4. EXISTING VENTILATION DUCTWORK AND RISER TO REMAIN AT THIS BATHROOMS IN CAMPTON APARTMENTS ONLY. COORDINATE DEMOLITION OF THE EXISTING ~~HVAC EQUIPMENT ON THE ROOF WITH NEW LAYOUT.~~
5. EXISTING VENTILATION DUCTWORK AND RISER TO REMAIN AT THESE BATHROOMS IN HADDON HALL GUESTROOMS ONLY. COORDINATE DEMOLITION OF THE EXISTING HVAC EQUIPMENT ON THE ROOF WITH NEW LAYOUT. RELOCATE SELECT WALL VENTILATION GRILLES WHEREIN CONFLICT WITH NEW PROPOSED SECONDARY CEILING.
6. EXISTING STRUCTURE TO REMAIN. EXISTING HVAC, VENTILATION DUCTWORK AND RIGER TO BE DEMOLISHED.
7. ~~EXISTING HVAC EQUIPMENT ON ROOF TO REMAIN. COORDINATE WITH HVAC~~ CONTRACTOR AND NEW WORK.
8. EXISTING HVAC EQUIPMENT ON ROOF TO BE DEMOLISHED. COORDINATE DISPOSAL OF THE EXISTING HVAC EQUIPMENT TO BE DEMOLISHED WITH GENERAL CONTRACTOR.

1

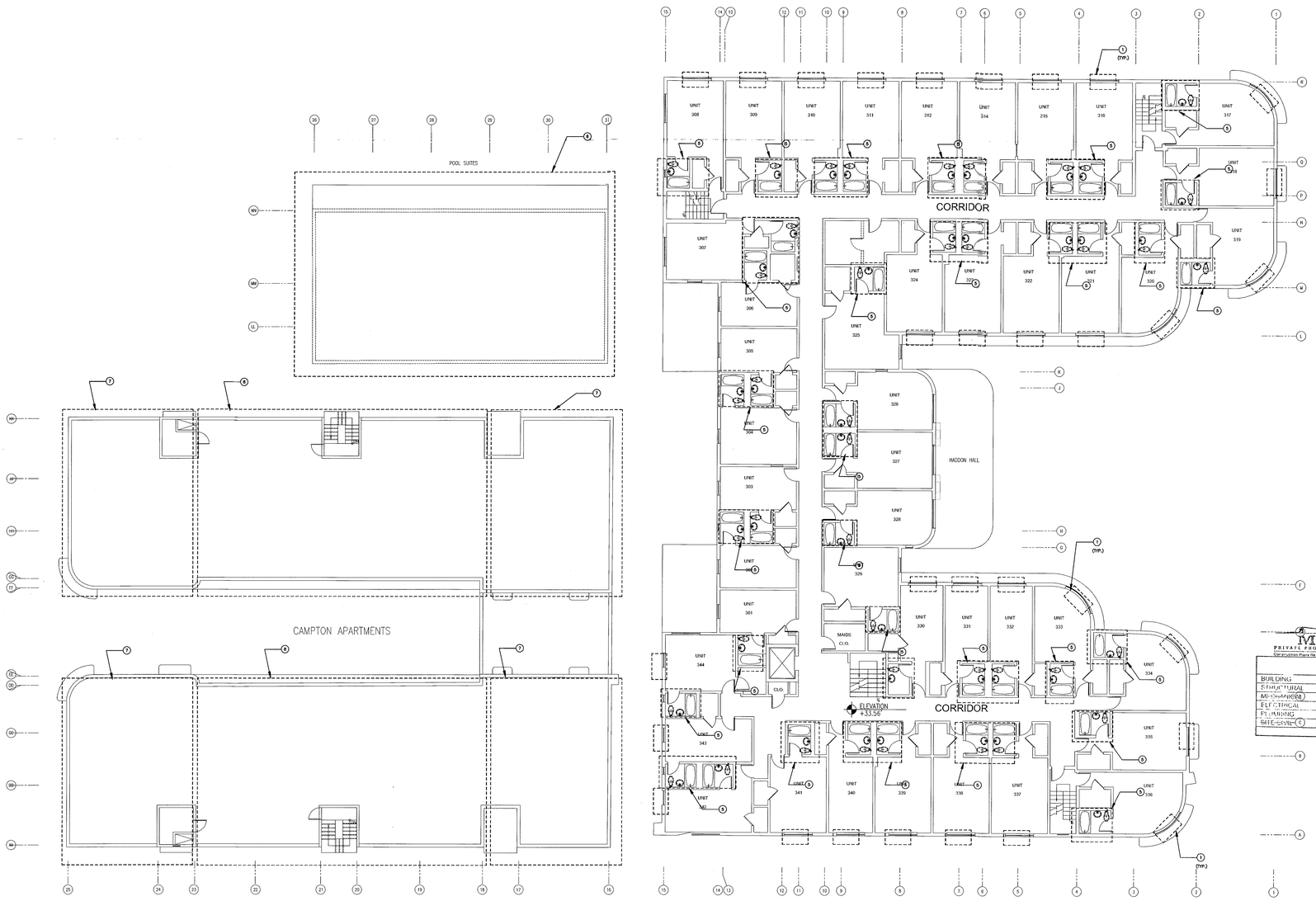

MTCI
PRIVATE PROVIDER SERVICES, LLC
Certificate Plans Review, Inspections, Testing & Consulting

	REVIEWER INITIALS	DATE REVIEWED
BUILDING		
STRUCTURAL		
MECHANICAL		10/10/14
ELECTRICAL		
PLUMBING		
SITE REVIEW		

THIRD FLOOR MECHANICAL DEMOLITION PLAN

SCALE:3/32"=1'-0"

MAY 09 2014
STEVEN R. FELLER LICENSE No 22046 STATE OF FLORIDA PROFESSIONAL ENGINEER
APPROVED MIAMI BEACH FIRE DEPARTMENT

STEVEN FELLER P.E.,PL
FLORIDA P.E. Reg. # 22046
Certificate of Authorization # 00003427
500 N.E. THIRD AVENUE
FORT LAUDERDALE, FLORIDA 33301
PH: 954.467.1402 FAX: 954.467.3762
e-mail: fellerpe@fellerpe.com
JOB # 13153

HADDON HALL
1500 COLLINS AVE

MIAMI BEACH, FL

KEYPLAN N.T.S.

REVISIONS

NO.	DESCRIPTION	ISSUE DATE
1	PROGRESS 100% CD SET	02-07-14

100% CONSTRUCTION DOCUMENT SET

NORTH SEAL

Jonathan Cardello
Lic. # AR93391

ADD Inc Architecture Interiors Planning

One Biscayne Tower
Suite 1670
Two South
Biscayne Boulevard
Miami, Fl 33131
T. 305.482.8700
F. 305.482.8770
www.addinc.com
Lic. # AA26001507

Boston Miami

JOB NUMBER:	13036.00
CHECKED BY:	
ISSUE DATE:	MARCH 14, 2014
SCALE:	AS NOTED

SHEET TITLE

THIRD FLOOR
DEMOLITION PLAN

SHEET NUMBER

M0.03

COPYRIGHT ADD INC 2011

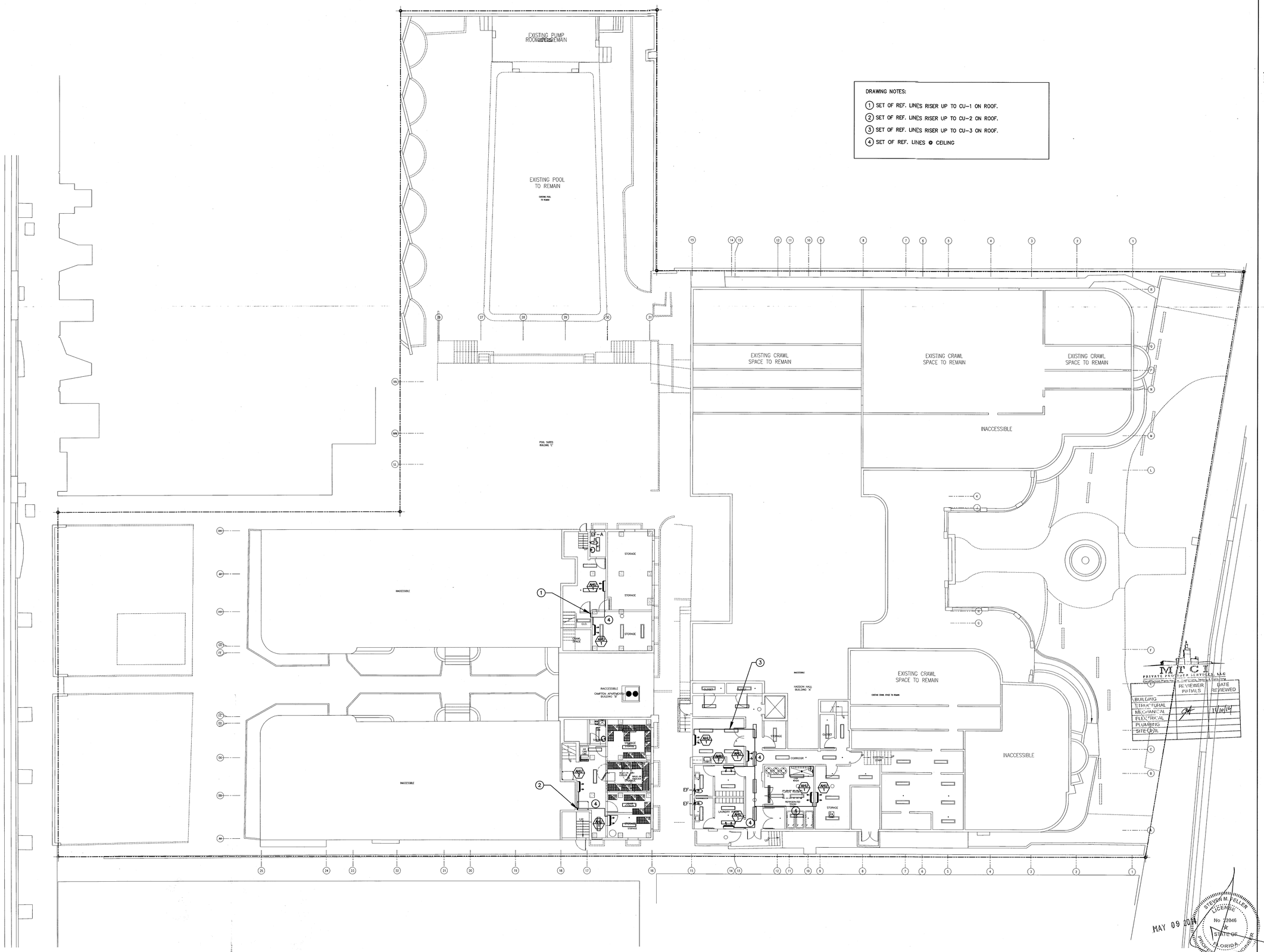
EXISTING PUMP ROOM TO REMAIN
EXISTING POOL TO REMAIN
EXISTING CRAWL SPACE TO REMAIN
EXISTING CRAWL SPACE TO REMAIN
EXISTING CRAWL SPACE TO REMAIN
INACCESSIBLE
EXISTING CRAWL SPACE TO REMAIN
INACCESSIBLE
INACCESSIBLE
INACCESSIBLE
INACCESSIBLE
STORAGE
STORAGE
STORAGE
CLG.
CRAWL SPACE
INACCESSIBLE
CAMPTON APARTMENT BUILDING "B"
LAUNDRY ROOM
STORAGE
CORRIDOR
STORAGE
DINING
KITCHEN
FIRST BUILT
LAUNDRY ROOM
STORAGE
EF-A
EF-B
EF-C
EF-D
AHU-1
AHU-2
AHU-3
AHU-4
AHU-5
AHU-6
AHU-7
AHU-8
AHU-9
AHU-10
AHU-11
AHU-12
AHU-13
AHU-14
AHU-15
AHU-16
AHU-17
AHU-18
AHU-19
AHU-20
AHU-21
AHU-22
AHU-23
AHU-24
AHU-25
AHU-26
AHU-27
AHU-28
AHU-29
AHU-30
AHU-31
AHU-32
AHU-33
AHU-34
AHU-35
AHU-36
AHU-37
AHU-38
AHU-39
AHU-40

DRAWING NOTES:

1. SET OF REF. LINES RISER UP TO CU-6 ON ROOF.
2. SET OF REF. LINES RISER UP TO ACCU-21 ON ROOF.
3. NOT USED
4. SET OF REF. LINES RISER UP TO ACCU-18 ON ROOF.
5. SET OF REF. LINES RISER UP TO ACCU-16 ON ROOF.
6. SET OF REF. LINES RISER UP TO ACCU-19 ON ROOF.
7. SET OF REF. LINES RISER UP TO ACCU-20 ON ROOF.
8. SET OF REF. LINES RISER UP TO CU-2 ON ROOF.
9. SET OF REF. LINES RISER UP TO CU-1 ON ROOF.
10. SET OF REF. LINES RISER UP TO CU-3 ON ROOF.
11. SET OF REF. LINES RISER UP TO ACCU-1 ON ROOF.
12. SET OF REF. LINES RISER UP TO ACCU-4 ON ROOF.
13. SET OF REF. LINES RISER UP TO ACCU-7 ON ROOF.
14. SET OF REF. LINES RISER UP TO ACCU-10 ON ROOF.
15. SET OF REF. LINES RISER UP TO CU-5 ON LOW ROOF. FIELD VERIFY EXACT ROUTING.

GENERAL NOTES:

OUTSIDE AIR FOR HABITABLE SPACES WILL BE PROVIDED BY OPERABLE WINDOWS TO COMPLYING WITH THE NATURAL VENTILATION METHOD IN ACCORDANCE WITH FMC 2010 SECTION 402 (402.2)

THE EXISTING NATURAL VENTILATION AT THE GUESTROOM RESTROOMS IS TO REMAIN AT THE HADDON AND CAMPTON BUILDINGS.
IT OCCURS THROUGH A WALL VENT LEADING UP THE AIR TO THE ATTIC SPACES WHERE IS VENTED OUT.
EXCEPT FOR UNITS B104, B105, B106 & B107 AS INDICATED

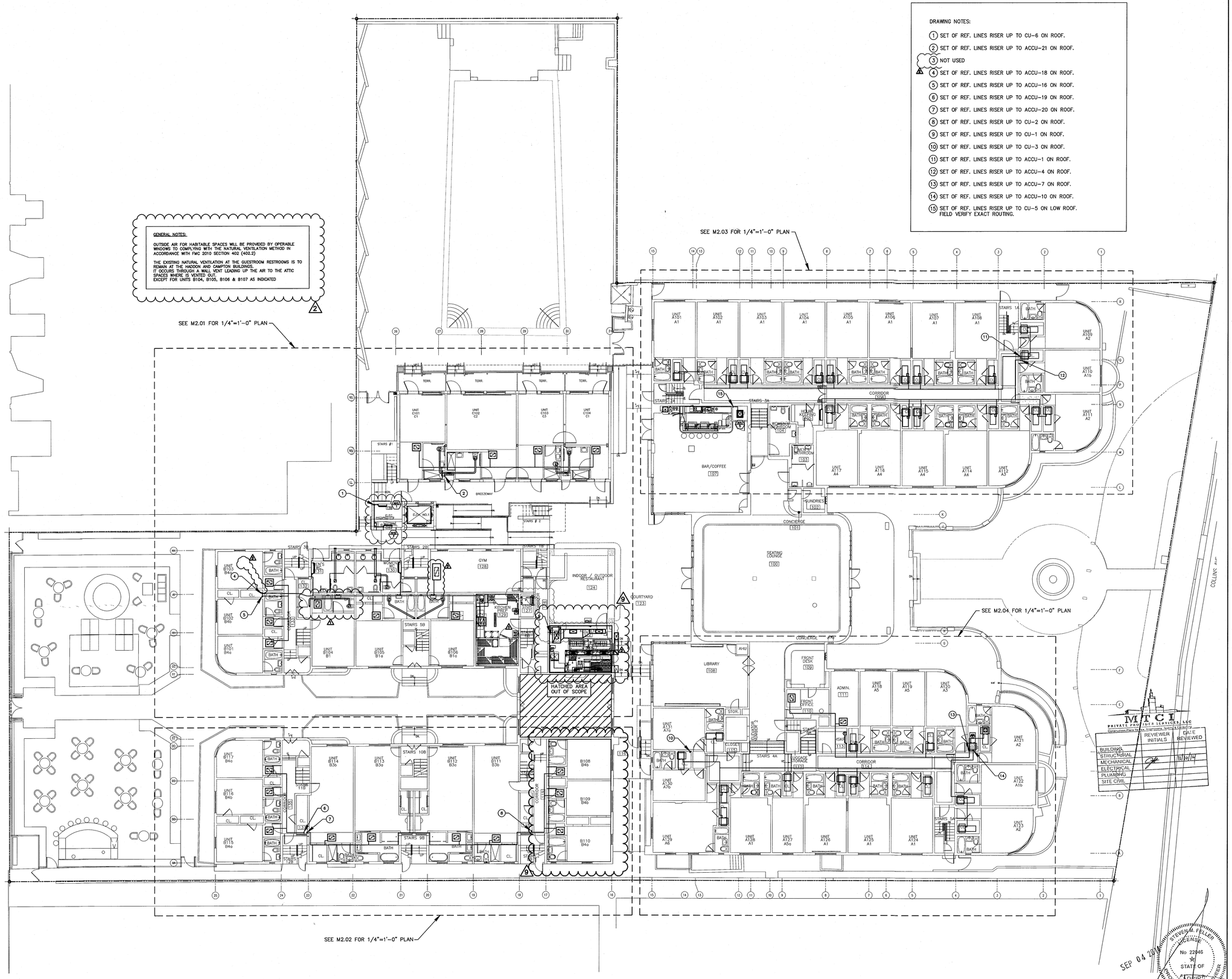

HADDON HALL
1500 COLLINS AVE

MIAMI BEACH, FL

KEYPLAN N.T.S.

REVISIONS		
NO.	DESCRIPTION	ISSUE DATE
1	PROGRESS 100% CD SET	02-07-14
2	PERMIT REVIEW COMMENTS	03-14-14
3	COORDINATION REVISION	03-14-14
9	KITCHEN RELOCATION	05-30-14

100% CONSTRUCTION DOCUMENT SET

NORTH SEAL

Jonathan Cardello
Lic. # AR93391

ADD Inc Architecture Interiors Planning

One Biscayne Tower
Suite 1670
Two South
Biscayne Boulevard
Miami, Fl 33131
T. 305.482.8700
F. 305.482.8770
www.addinc.com
Lic. # AA26001507

Boston Miami

MTCI PRIVATE PROVIDER SERVICES, LLC

REVIEWER INITIALS	DATE REVIEWED
BUILDING	
STRUCTURAL	
MECHANICAL	11/10/14
ELECTRICAL	
PLUMBING	
SITE CIVIL	

JOB NUMBER:	13036.00
CHECKED BY:	
ISSUE DATE:	MARCH 14, 2014
SCALE:	AS NOTED

SHEET TITLE

GROUND FLOOR MECHANICAL PLAN

SEP 04 2014

STEVEN M. FELLER LICENSE No 22046 STATE OF FLORIDA PROFESSIONAL ENGINEER

APPROVED MIAMI BEACH FIRE DEPARTMENT

STEVEN FELLER P.E.,PL
FLORIDA P.E. Reg. # 22046
Certificate of Authorization # 00003427
500 N.E. THIRD AVENUE
FORT LAUDERDALE, FLORIDA 33301
PH: 954.467.1402 FAX: 954.467.5732
e-mail: fellerpe@fellerpe.com
JOB # 13153

SHEET NUMBER

M1.01

COPYRIGHT ADD INC 2011

GROUND FLOOR MECHANICAL PLAN

SCALE:3/32"=1'-0"

DRAWING NOTES:

1. SET OF REF. LINES RISER UP TO ACCU-21 ON ROOF.
2. SET OF REF. LINES RISER UP TO ACCU-18 ON ROOF.
3. NOT USED
4. SET OF REF. LINES RISER UP TO ACCU-16 ON ROOF.
5. SET OF REF. LINES RISER UP TO ACCU-20 ON ROOF.
6. SET OF REF. LINES RISER UP TO ACCU-19 ON ROOF.
7. SET OF REF. LINES RISER UP TO CU-2 ON ROOF.
8. SET OF REF. LINES RISER UP TO CU-1 ON ROOF.
9. SET OF REF. LINES RISER UP TO ACCU-14 ON ROOF.
10. SET OF REF. LINES RISER UP TO ACCU-13 ON ROOF.
11. SET OF REF. LINES RISER UP TO ACCU-15 ON ROOF.
12. SET OF REF. LINES RISER UP TO CU-3 ON ROOF.
13. SET OF REF. LINES RISER UP TO ACCU-2 ON ROOF.
14. SET OF REF. LINES RISER UP TO ACCU-1 ON ROOF.
15. SET OF REF. LINES RISER UP TO ACCU-4 ON ROOF.
16. SET OF REF. LINES RISER UP TO ACCU-5 ON ROOF.
17. SET OF REF. LINES RISER UP TO ACCU-8 ON ROOF.
18. SET OF REF. LINES RISER UP TO ACCU-7 ON ROOF.
19. SET OF REF. LINES RISER UP TO ACCU-10 ON ROOF.
20. SET OF REF. LINES RISER UP TO ACCU-11 ON ROOF.
21. SET OF REF. LINES DOWN TO 1ST FLOOR.

GENERAL NOTES:

OUTSIDE AIR FOR HABITABLE SPACES WILL BE PROVIDED BY OPERABLE WINDOWS TO COMPLYING WITH THE NATURAL VENTILATION METHOD IN ACCORDANCE WITH FMC 2010 SECTION 402 (402.2)

THE EXISTING NATURAL VENTILATION AT THE GUESTROOM RESTROOMS IS TO REMAIN AT THE HADDON AND CAMPTON BUILDINGS.
IT OCCURS THROUGH A WALL VENT LEADING UP THE AIR TO THE ATTIC SPACES WHERE IS VENTED OUT.
EXCEPT FOR UNITS B104, B105, B106 & B107 AS INDICATED

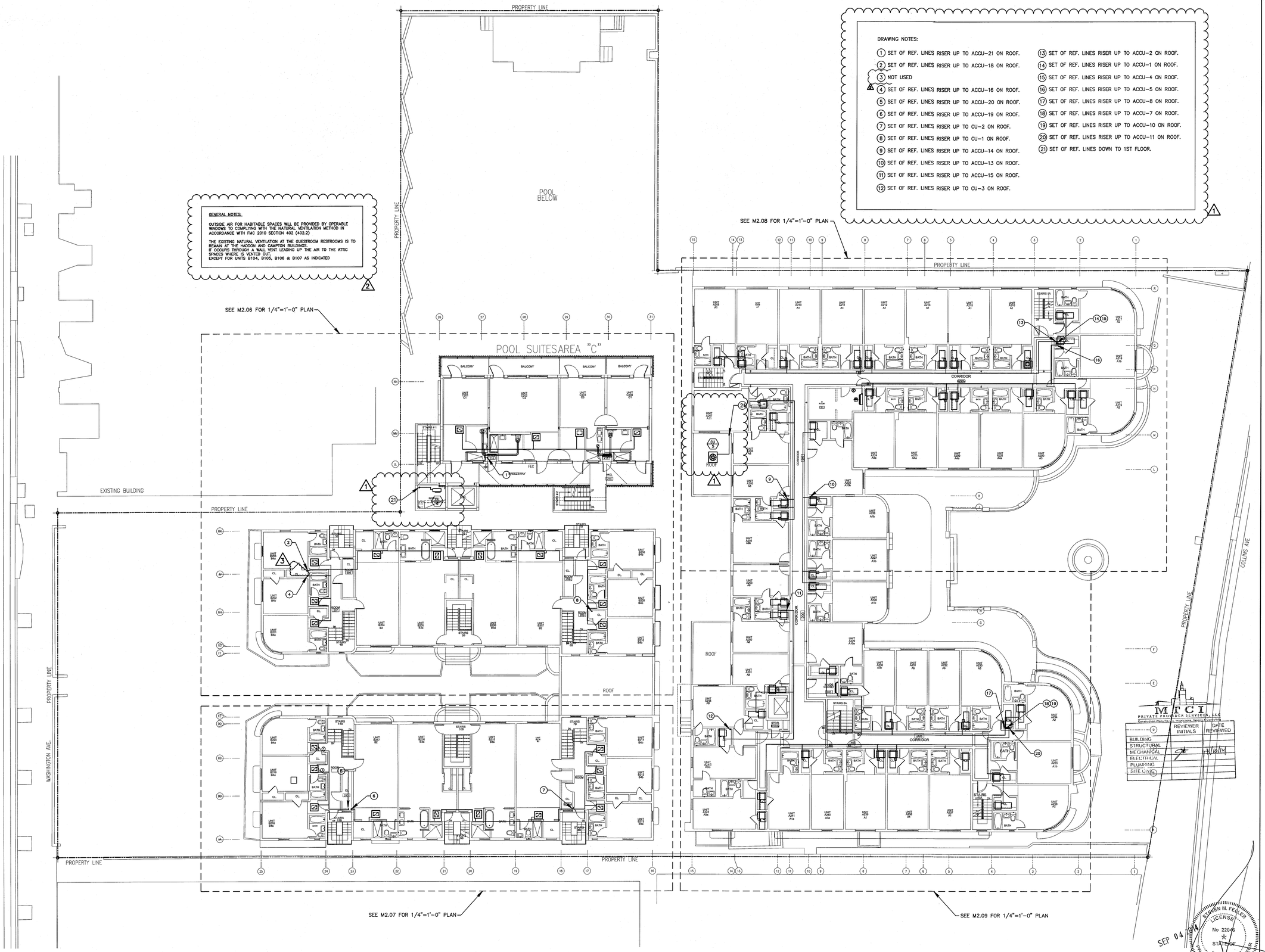

SECOND FLOOR MECHANICAL PLAN

SCALE:3/32"=1'-0"

HADDON HALL
1500 COLLINS AVE

MIAMI BEACH, FL

KEYPLAN N.T.S.

REVISIONS

NO.	DESCRIPTION	ISSUE DATE
1	PROGRESS 100% CD SET	02-07-14
2	PERMIT REVIEW COMMENTS	03-14-14
3	COORDINATION REVISION	03-14-14

100% CONSTRUCTION DOCUMENT SET

NORTH SEAL

Jonathan Cardello
Lic. # AR93391

ADD Inc Architecture Interiors Planning

One Biscayne Tower
Suite 1670
Two South
Biscayne Boulevard
Miami, Fl 33131
T. 305.482.8700
F. 305.482.8770
www.addinc.com
Lic. # AA26001507

Boston Miami

MCCI PRIVATE PROVIDER SERVICES, LLC
Construction Plans Review, Inspections, Testing & Consulting

	REVIEWER INITIALS	DATE REVIEWED
BUILDING		
STRUCTURAL		
MECHANICAL		4/16/14
ELECTRICAL		
PLUMBING		
SITE LOGS		

JOB NUMBER: 13036.00
CHECKED BY:
ISSUE DATE: MARCH 14, 2014
SCALE: AS NOTED

SHEET TITLE

SECOND FLOOR MECHANICAL PLAN

STEVEN M. FELLER LICENSED No 22046 STATE OF FLORIDA PROFESSIONAL ENGINEER

SEP 04 2014

APPROVED MIAMI BEACH FIRE DEPARTMENT

STEVEN FELLER P.E.,PL
FLORIDA P.E. Reg. # 22046
Certificate of Authorization # 00003427
500 N.E. THIRD AVENUE
FORT LAUDERDALE, FLORIDA 33301
PH: 954.467.1402 FAX: 954.467.5752
e-mail: felleripe@tellerpe.com
JOB # 13153

SHEET NUMBER

M1.02

COPYRIGHT ADD INC 2011

GENERAL NOTES:

OUTSIDE AIR FOR HABITABLE SPACES WILL BE PROVIDED BY OPERABLE WINDOWS TO COMPLYING WITH THE NATURAL VENTILATION METHOD IN ACCORDANCE WITH FMC 2010 SECTION 402 (402.2)

THE EXISTING NATURAL VENTILATION AT THE GUESTROOM RESTROOMS IS TO REMAIN AT THE HADDON AND CAMPTON BUILDINGS.
IT OCCURS THROUGH A WALL VENT LEADING UP THE AIR TO THE ATTIC SPACES WHERE IS VENTED OUT.
EXCEPT FOR UNITS B104, B105, B106 & B107 AS INDICATED

2

DRAWING NOTES:

1. SET OF REF. LINES RISER UP TO ACCU-14 ON ROOF.
2. SET OF REF. LINES RISER UP TO ACCU-13 ON ROOF.
3. SET OF REF. LINES RISER UP TO ACCU-15 ON ROOF.
4. SET OF REF. LINES RISER UP TO CU-3 ON ROOF.
5. SET OF REF. LINES RISER UP TO ACCU-3 ON ROOF.
6. SET OF REF. LINES RISER UP TO ACCU-1 ON ROOF.
7. SET OF REF. LINES RISER UP TO ACCU-2 ON ROOF.
8. SET OF REF. LINES RISER UP TO ACCU-4 ON ROOF.
9. SET OF REF. LINES RISER UP TO ACCU-5 ON ROOF.
10. SET OF REF. LINES RISER UP TO ACCU-6 ON ROOF.
11. SET OF REF. LINES RISER UP TO ACCU-9 ON ROOF.
10. SET OF REF. LINES RISER UP TO ACCU-6 ON ROOF.
11. SET OF REF. LINES RISER UP TO ACCU-9 ON ROOF.
12. SET OF REF. LINES RISER UP TO ACCU-7 ON ROOF.
13. SET OF REF. LINES RISER UP TO ACCU-8 ON ROOF.
14. SET OF REF. LINES RISER UP TO ACCU-10 ON ROOF.
15. SET OF REF. LINES RISER UP TO ACCU-11 ON ROOF.
16. SET OF REF. LINES RISER UP TO ACCU-12 ON ROOF.
17. KITCHEN HOOD DUCT DOWN TO 1ST FLOOR
18. MAKE UP AIR DUCT DOWN TO 1RST FLOOR
19. NOT USED. 9
20. REF. LINES RISER DOWN TO 1ST & 2ND FLOOR
21. REF. LINES RISER DOWN TO 1ST & BASEMENT LEVEL

NOTE: VERIFY/COORDINATE EXACT LOCATION OF ALL MECHANICAL EQUIPMENT W/ARCHITECTURAL DRAWINGS

1

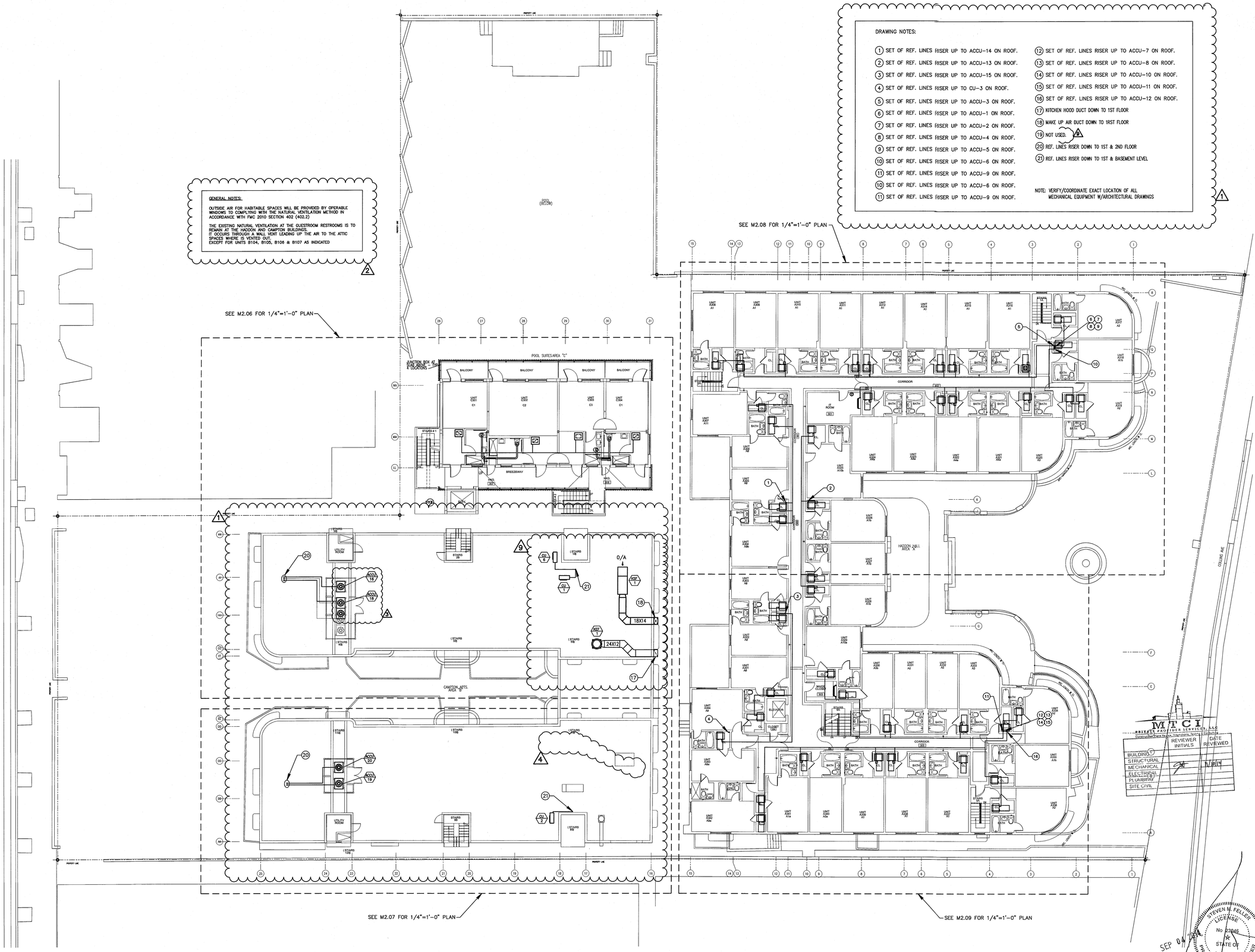

THIRD FLOOR MECHANICAL PLAN

SCALE:3/32"=1'-0"

HADDON HALL
1500 COLLINS AVE

MIAMI BEACH, FL

KEYPLAN N.T.S.

REVISIONS

NO.	DESCRIPTION	ISSUE DATE
1	PROGRESS 100% CD SET	02-07-14
2	PERMIT REVIEW COMMENTS	03-14-14
3	COORDINATION REVISION	03-14-14
4	FIRE REVIEW COMMENTS	04-07-14
9	KITCHEN RELOCATION	05-30-14

100% CONSTRUCTION DOCUMENT SET

NORTH

SEAL

Jonathan Cardello
Lic. # AR93391

ADD Inc Architecture Interiors Planning

One Biscayne Tower
Suite 1670
Two South
Biscayne Boulevard
Miami, Fl 33131
T. 305.482.8700
F. 305.482.8770
www.addinc.com
Lic. # AA26001507

Boston Miami

MTCI PRIVATE REVIEW SERVICES, LLC
Construction Plans Review, Inspections, Permits, Consulting

	REVIEWER INITIALS	DATE REVIEWED
BUILDING		
STRUCTURAL		
MECHANICAL	JT	7/8/14
ELECTRICAL		
PLUMBING		
SITE CIVIL		

JOB NUMBER:	13036.00
CHECKED BY:	
ISSUE DATE:	MARCH 14, 2014
SCALE:	AS NOTED

SHEET TITLE

THIRD FLOOR MECHANICAL PLAN

STEVEN M. FELLER LICENSE No. 22046 STATE OF FLORIDA PROFESSIONAL ENGINEER

SEP 04 2014

APPROVED MIAMI BEACH FIRE DEPARTMENT

STEVEN FELLER P.E., PL
FLORIDA P.E. Reg. # 22046
Certificate of Authorization # 00003427
500 N.E. THIRD AVENUE
FORT LAUDERDALE, FLORIDA 33301
PH: 954.467.1402 FAX: 954.467.5752
e-mail: fellerpe@fellerpe.com
JOB # 13153

SHEET NUMBER

M1.03

COPYRIGHT ADD INC 2011

DRAWING NOTES:

1. REF. LINES RISER DOWN TO 1ST; 2ND & 3RD FLOOR
2. SEE ROOF EQUIPMENT ON SHEET M1.03
3. SEE ROOF EQUIPMENT ON SHEET M1.02
4. REF. LINES RISER UP TO 2ND & 3RD LEVEL
5. REF. LINES RISER DOWN TO 1ST LEVEL
6. KITCHEN HOOD DUCT DOWN TO 1ST FLOOR
7. MAKE UP AIR DUCT DOWN TO 1RST FLOOR
8. KITCHEN S/R AIR CONDITIONING DUCT DOWN TO 1ST FLOOR

NOTE: VERIFY/COORDINATE EXACT LOCATION OF ALL MECHANICAL EQUIPMENT W/ARCHITECTURAL DRAWINGS

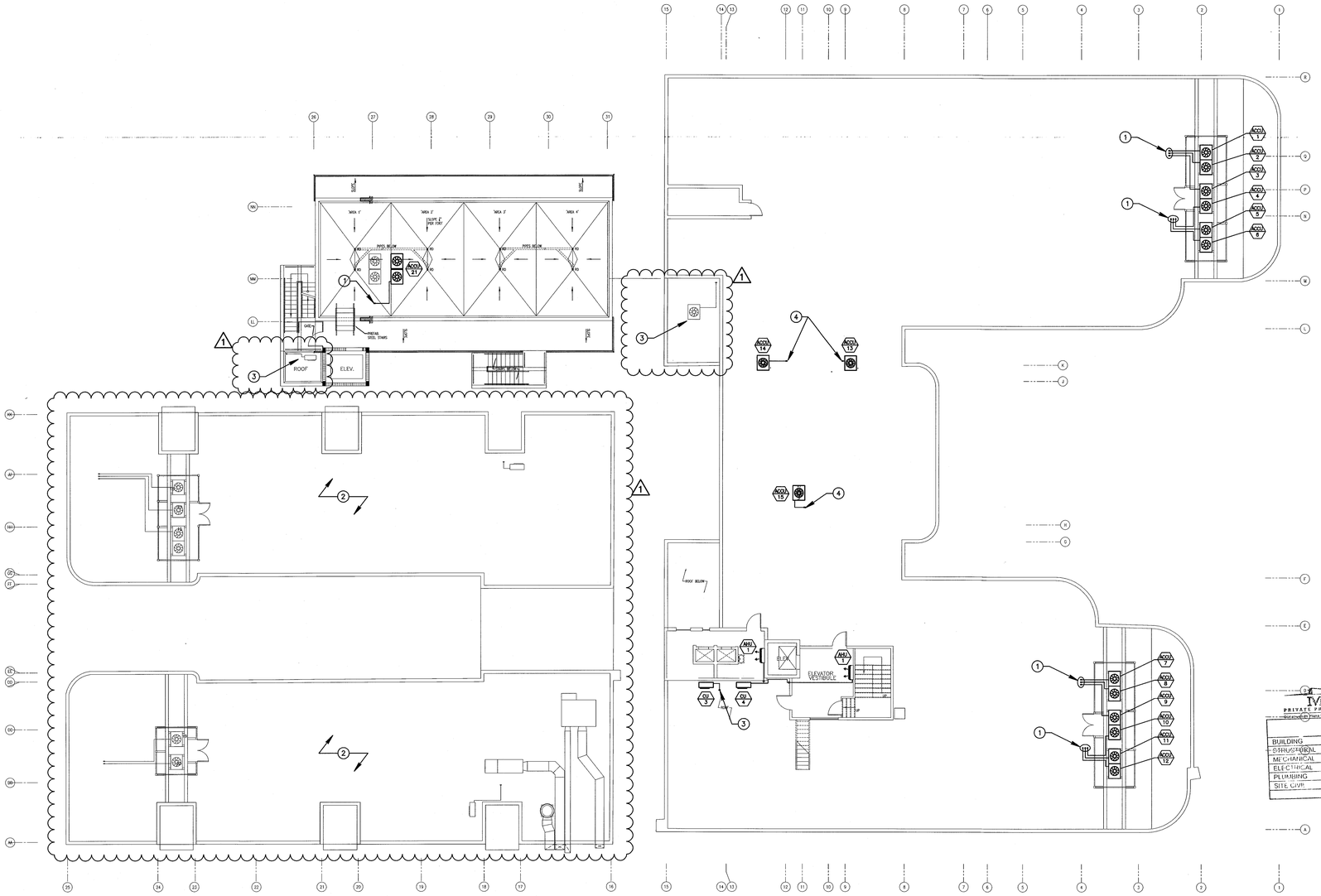

MECHANICAL ROOF PLAN

SCALE: 3/32"=1'-0"

HADDON HALL
1500 COLLINS AVE

MIAMI BEACH, FL

KEYPLAN N.T.S.

REVISIONS

NO.	DESCRIPTION	ISSUE DATE
1	PROGRESS 100% CD SET	02-07-14

100% CONSTRUCTION DOCUMENT SET

NORTH

SEAL

Jonathan Cardello
Lic. # AR93391

ADD Inc Architecture Interiors Planning

One Biscayne Tower
Suite 1670
Two South
Biscayne Boulevard
Miami, Fl 33131
T. 305.482.8700
F. 305.482.8770
www.addinc.com
Lic. # AA26001507

Boston Miami

MCI PRIVATE PROVIDER SERVICES, LLC

	REVIEWER INITIALS	DATE REVIEWED
BUILDING		
STRUCTURAL		
MECHANICAL		11/10/14
ELECTRICAL		
PLUMBING		
SITE CIVIL		

MAY 09 2014

STEVEN M. FELLER LICENSE No 22046 STATE OF FLORIDA PROFESSIONAL ENGINEER

APPROVED MIAMI BEACH FIRE DEPARTMENT

STEVEN FELLER P.E.,PL
FLORIDA P.E. Reg. # 22046
Certificate of Authorization # 00003427
500 N.E. THIRD AVENUE
FORT LAUDERDALE, FLORIDA 33301
PH: 954.467.1402 FAX: 954.467.5752
e-mail: fellerpe@fellerpe.com
JOB # 13153

JOB NUMBER:	13036.00
CHECKED BY:	
ISSUE DATE:	MARCH 14, 2014
SCALE:	AS NOTED

SHEET TITLE

MECHANICAL ROOF PLAN

SHEET NUMBER

M1.04

COPYRIGHT ADD INC 2011

DRAWING NOTES:

1. SOLID ACCESS PANEL MOUNTED AT CEILING BELOW UNIT W/ 18X12 RAG. TYP. FOR ALL. (9)
2. SOLID ACCESS PANEL MOUNTED AT CEILING BELOW UNIT W/ 30X24 RAG. TYP. FOR ALL.
3. SET OF REF. PIPES RISER UP TO ROOF PLAN.
4. SET OF REF. PIPES AT CEILING SPACE, FIELD VERIFY EXACT LOCATION.
5. EXHAUST DUCT UP TO ROOF IN 2HR FIRE RATED SHAFT W/ GOOSE NECK CAP AND INSECT WIRE MESH SCREEN AT ROOF TERMINATION.
6. EXHAUST DUCT TO EXTERIOR WALL 10' AFF W/WALL CAP AND INSECT WIRE MESH SCREEN AT WALL TERMINATION.
7. EXHAUST DUCT UP TO ROOF W/ GOOSE NECK CAP AND INSECT WIRE MESH SCREEN AT ROOF TERMINATION.
8. SET OF REF. PIPES RISER UP TO LOW ROOF PLAN.
9. TERMINATE 8"ø O/A INTAKE DUCT @ EXTERIOR WALL W/WALL CAP. PROVIDE BUG SCREEN. SET MVD @ 110 CFM
10. TERMINATE 6"ø O/A INTAKE DUCT @ EXTERIOR WALL W/WALL CAP. PROVIDE BUG SCREEN. SET MVD @ 100 CFM (2)
11. KITCHEN EXHAUST HOOD & MUA DUCTS UP TO ROOF & PENETRATE PARAPET. SUPPORTS AS REQUIRED. SLOPE KITCHEN HOOD EXIT DUCT. NO LOW POINT PERMITTED. SEE M104 FOR CONTINUATION.
12. KITCHEN EXHAUST DUCT TO BE 16 GAGE STEEL W/WELDED STEAM AND WATER TIGHT. PROVIDE CLEANOUTS IN ACCORDANCE W/ CODE.
13. DISH WASHER EXH DUCT. PROVIDE ALUMINUM DUCT W/WELDED STEAM AND WATER TIGHT.
14. TERMINATE 8"ø MUA INTAKE DUCT @ EXTERIOR WALL W/WALL CAP.
15. TERMINATE 6"ø O/A INTAKE DUCT @ EXTERIOR WALL W/WALL CAP. PROVIDE BUG SCREEN. SET MVD @ 300 CFM

(2) GENERAL NOTES:

1.) TOILET VENTILATION IS EXISTING AND WILL NOT BE DISTURBED. NEW TOILET EXHAUST WILL BE PROVIDED ONLY AS SHOWN.

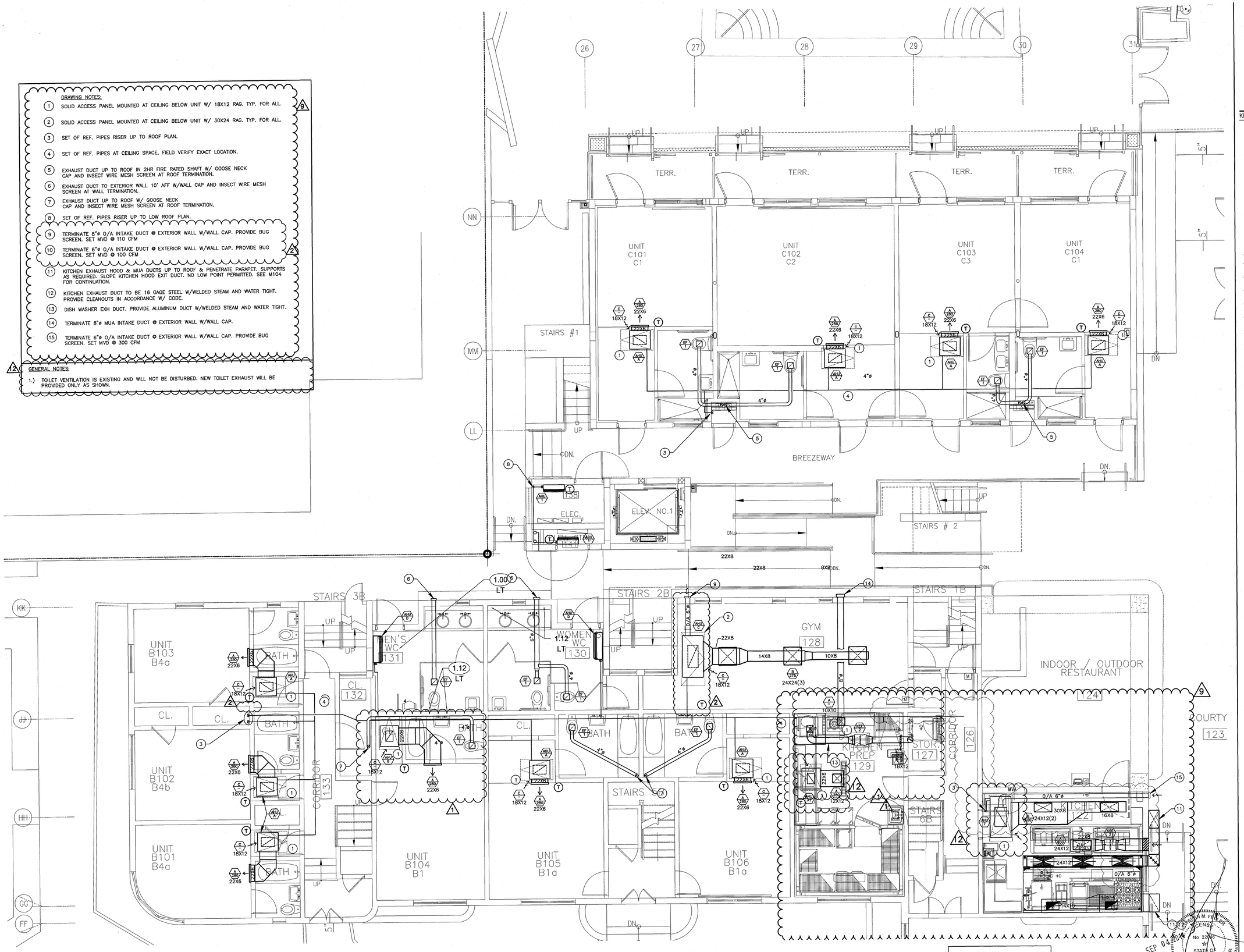

CAMPTON / POOLS GROUND FLOOR TYPICAL ENLARGED UNITS MECHANICAL PLAN

SCALE: 1/4"=1'-0"

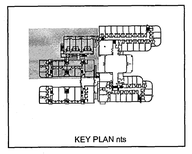

KEY PLAN nts

STEVEN FELLER P.E., P.L.
FLORIDA P.E. Reg. # 22046
Certificate of Authorization # 00003427
500 N.E. THIRD AVENUE
FORT LAUDERDALE, FLORIDA 33301
PH: 954.467.1402 FAX: 954.467.5752
e-mail: fellerpe@fellerpe.com
JOB # 13153

STEVEN M. FELLER LICENSE No 22046 STATE OF FLORIDA PROFESSIONAL ENGINEER

SEP 04 2014

APPROVED MIAMI BEACH FIRE DEPARTMENT

HADDON HALL
1500 COLLINS AVE

MIAMI BEACH, FL

KEYPLAN N.T.S.

REVISIONS

NO.	DESCRIPTION	ISSUE DATE
1	PROGRESS 100% CD SET	02-07-14
2	COORDINATION REVISION	03-14-14
9	KITCHEN RELOCATION	05-30-14
12	FIRE & MTCI COMMENTS	08-21-14

MTCI PRIVATE PROVIDER SERVICES, LLC

	REVIEWER INITIALS	DATE REVIEWED
BUILDING		
STRUCTURAL		
MECHANICAL		11/10/14
ELECTRICAL		
PLUMBING		
SITE, CIVIL		

100% CONSTRUCTION DOCUMENT SET

NORTH SEAL

Jonathan Cardello
Lic. # AR93391

ADD Inc Architecture Interiors Planning

One Biscayne Tower
Suite 1670
Two South
Biscayne Boulevard
Miami, Fl 33131
T. 305.482.8700
F. 305.482.8770
www.addinc.com
Lic. # AA26001507

Boston Miami

JOB NUMBER: 13036.00

CHECKED BY:

ISSUE DATE: MARCH 14, 2014

SCALE: AS NOTED

SHEET TITLE

ENLARGED UNITS MECHANICAL PLAN CAMPTON / POOL UNITS

SHEET NUMBER

M2.01

COPYRIGHT ADD INC 2011

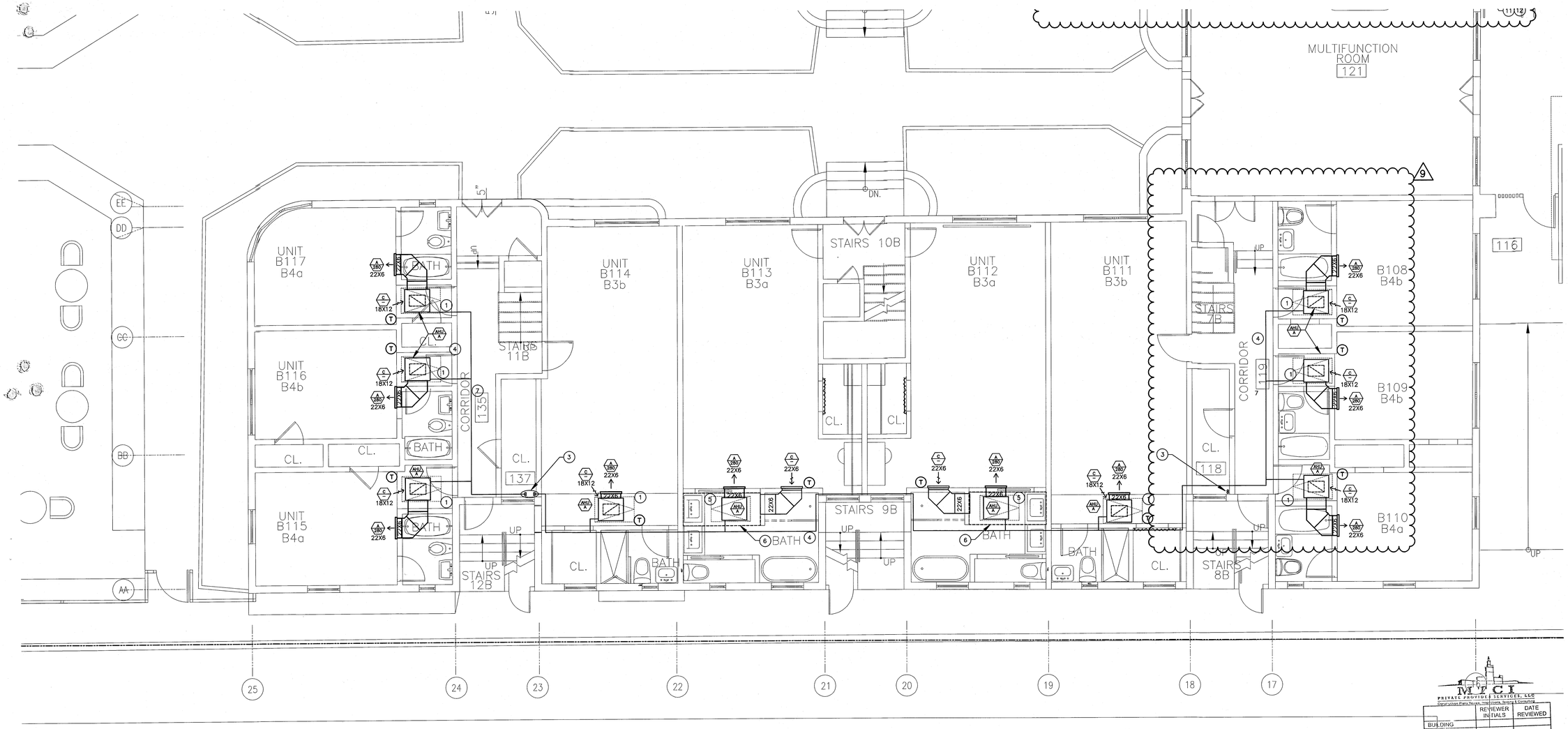

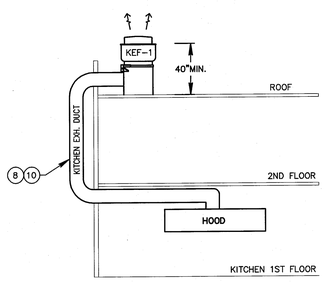

KITCHEN EXH DUCT RISER DIAGRAM

SCALE: NTS

DRAWING NOTES:

1. SOLID ACCESS PANEL MOUNTED AT CEILING BELOW UNIT W/ 18X12 RAG. TYP. FOR ALL.
2. SOLID ACCESS PANEL MOUNTED AT CEILING BELOW UNIT W/ 30X24 RAG. TYP. FOR ALL.
3. SET OF REF. PIPES RISER UP TO ROOF PLAN.
4. SET OF REF. PIPES AT CEILING SPACE, FIELD VERIFY EXACT LOCATION.
5. SOLID ACCESS PANEL MOUNTED AT CEILING BELOW UNIT.
6. R/A PLENUM ABOVE CEILING. ANY PENETRATIONS THRU PLENUM DUCTWORK, PIPING, CONDUIT, ETC. SHALL BE SEALED AIR TIGHT.
7. SET OF REF. PIPES BELOW EXISTING CEILING. ARCHITECT TO PROVIDE SOFFIT. COORDINATE W/I D DWG.
8. NOT USED.
9. NOT USED.
10. NOT USED.
11. DISH WASHER EXH DUCT. PROVIDE ALUMINUM DUCT W/WELDED STEAM AND WATER TIGHT.

CAMPTON GROUND FLOOR TYPICAL ENLARGED UNITS MECHANICAL PLAN

SCALE: 1/4"=1'-0"

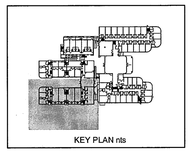

KEY PLAN nts

MTCI PRIVATE PROVIDER SERVICES, LLC
Operation Plans Review, Inspections, Testing & Contracting

	REVIEWER INITIALS	DATE REVIEWED
BUILDING		
STRUCTURAL		
MECHANICAL	SM	11/10/14
ELECTRICAL		
PLUMBING		
SITE CIVIL		

STEVEN FELLER P.E.,PL
FLORIDA P.E. Reg. # 22046
Certificate of Authorization # 00003427
500 N.E. THIRD AVENUE
FORT LAUDERDALE, FLORIDA 33301
PH: 954.467.1402 FAX: 954.467.3752
e-mail: fellerpe@fellerpe.com
JOB # 13153

SEP 04 2014
STEVEN M. FELLER LICENSE NO. 22046 STATE OF FLORIDA PROFESSIONAL ENGINEER
APPROVED MIAMI BEACH FIRE DEPARTMENT

HADDON HALL
1500 COLLINS AVE
MIAMI BEACH, FL

KEYPLAN N.T.S.

REVISIONS

NO.	DESCRIPTION	ISSUE DATE
9	KITCHEN RELOCATION	05-30-14

100% CONSTRUCTION DOCUMENT SET

NORTH

SEAL

Jonathan Cardello
Lic. # AR93391

ADD Inc Architecture Interiors Planning

One Biscayne Tower
Suite 1670
Two South
Biscayne Boulevard
Miami, Fl 33131
T. 305.482.8700
F. 305.482.8770
www.addinc.com
Lic. # AA26001507

Boston Miami

JOB NUMBER:	13036.00
CHECKED BY:	
ISSUE DATE:	MARCH 14, 2014
SCALE:	AS NOTED

SHEET TITLE

ENLARGED UNITS
MECHANICAL PLAN
CAMPTON UNITS

SHEET NUMBER

M2.02

COPYRIGHT ADD INC 2011

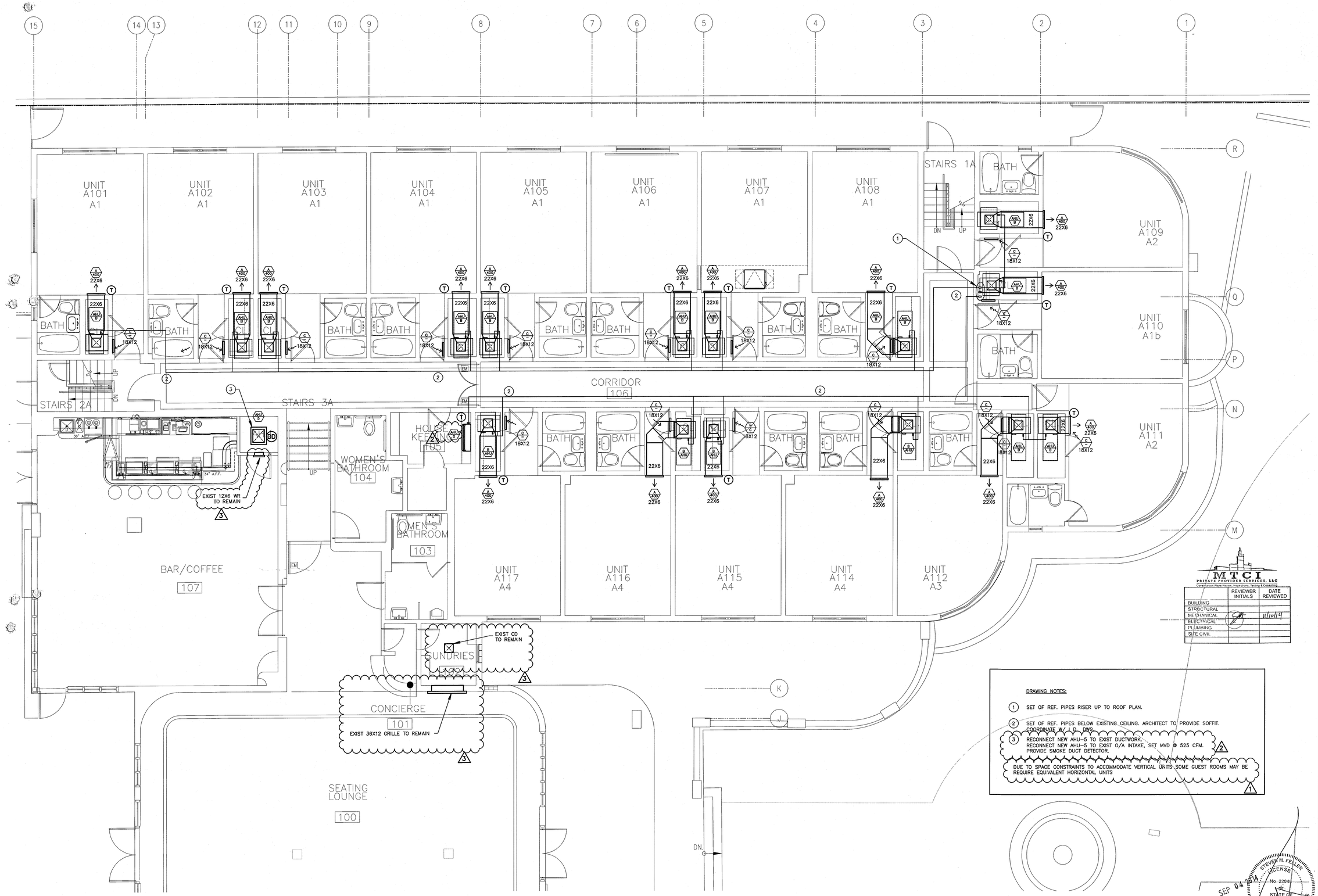

HADDON HALL GROUND FLOOR TYPICAL ENLARGED UNITS MECHANICAL PLAN

SCALE: 1/4"=1'-0"

DRAWING NOTES:

1. SET OF REF. PIPES RISER UP TO ROOF PLAN.
2. SET OF REF. PIPES BELOW EXISTING CEILING. ARCHITECT TO PROVIDE SOFFIT. COORDINATE W/ I.D. DWG.
3. RECONNECT NEW AHU-5 TO EXIST DUCTWORK. RECONNECT NEW AHU-5 TO EXIST O/A INTAKE, SET MVD @ 525 CFM. PROVIDE SMOKE DUCT DETECTOR.

DUE TO SPACE CONSTRAINTS TO ACCOMMODATE VERTICAL UNITS SOME GUEST ROOMS MAY BE REQUIRE EQUIVALENT HORIZONTAL UNITS

MTCI
PRIVATE PROVIDER SERVICES, LLC
Construction Plans Review, Inspections, Testing & Consulting

	REVIEWER INITIALS	DATE REVIEWED
BUILDING		
STRUCTURAL		
MECHANICAL		
ELECTRICAL		
PLUMBING		
SITE CIVIL		

KEY PLAN nts

STEVEN M. FELLER LICENSE No. 22046 STATE OF FLORIDA PROFESSIONAL ENGINEER

SEP 04 2014

APPROVED MIAMI BEACH FIRE DEPARTMENT

STEVEN FELLER P.E., PL
FLORIDA P.E. Reg. # 22046
Certificate of Authorization # 00003427
500 N.E. TWRD AVENUE
FORT LAUDERDALE, FLORIDA 33301
PH: 954.467.1402 FAX: 954.467.5752
e-mail: fellerpe@fellerpe.com
JOB # 13153

HADDON HALL
1500 COLLINS AVE
MIAMI BEACH, FL

KEYPLAN N.T.S.

REVISIONS

NO.	DESCRIPTION	ISSUE DATE
1	PROGRESS 100% CD SET	02-07-14
2	PERMIT REVIEW COMMENTS	03-14-14
3	COORDINATION REVISION	03-14-14

100% CONSTRUCTION DOCUMENT SET

NORTH SEAL

Jonathan Cardello
Lic. # AR93391

ADD Inc Architecture Interiors Planning

One Biscayne Tower
Suite 1670
Two South
Biscayne Boulevard
Miami, Fl 33131
T. 305.482.8700
F. 305.482.8770
www.addinc.com
Lic. # AA26001507

Boston Miami

JOB NUMBER:	13036.00
CHECKED BY:	
ISSUE DATE:	MARCH 14, 2014
SCALE:	AS NOTED

SHEET TITLE

ENLARGED UNITS
MECHANICAL PLAN
HADDON HALL NORTH WING

SHEET NUMBER

M2.03

COPYRIGHT ADD INC 2011

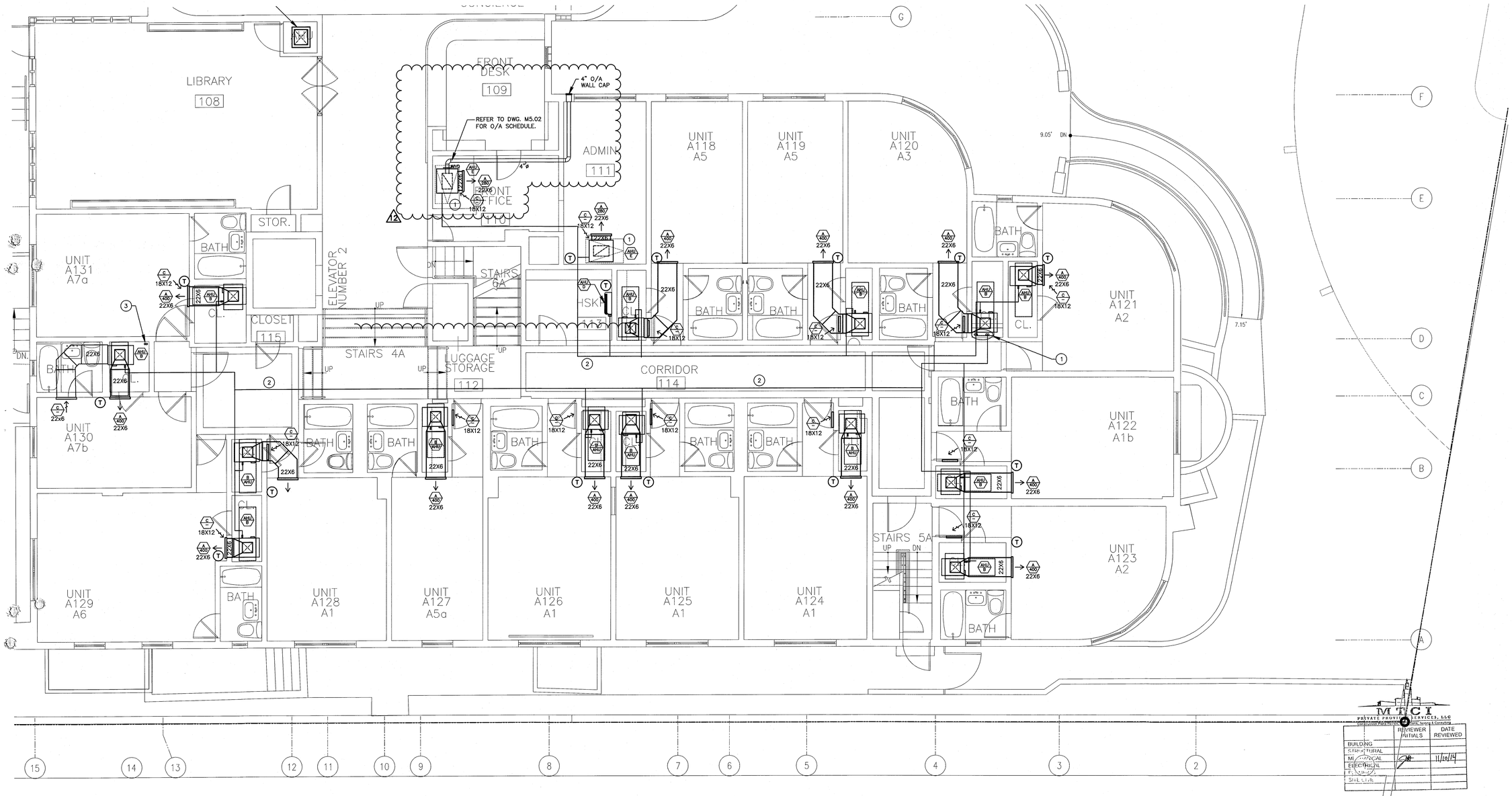

	REVIEWER INITIALS	DATE REVIEWED
BUILDING		
STRUCTURAL		
MECHANICAL		11/10/14
ELECTRICAL		
PLUMBING		
SHEET TITLE		

DRAWING NOTES:

1. SOLID ACCESS PANEL MOUNTED AT CEILING BELOW UNIT W/ 18X12 RAG. TYP. FOR ALL.
2. SET OF REF. PIPES BELOW EXISTING CEILING. ARCHITECT TO PROVIDE SOFFIT. COORDINATE W/ I D DWG.
3. SET OF REF. PIPES RISER UP TO ROOF PLAN.
4. EXISTING AHU TO REMAIN.

DUE TO SPACE CONSTRAINTS TO ACCOMMODATE VERTICAL UNITS SOME GUEST ROOMS MAY BE REQUIRE EQUIVALENT HORIZONTAL UNITS

HADDON HALL GROUND FLOOR TYPICAL ENLARGED UNITS MECHANICAL PLAN

SCALE: 1/4"=1'-0"

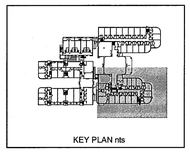

KEY PLAN nts

STEVEN FELLER P.E.,PL
FLORIDA P.E. Reg. # 22046
Certificate of Authorization # 00003427
500 N.E. THIRD AVENUE
FORT LAUDERDALE, FLORIDA 33301
PH: 954.467.1402 FAX: 954.467.5752
e-mail: fellerpe@fellerpe.com
JOB # 13153

STEVEN W. FELLER LICENSE No 22046 STATE OF FLORIDA PROFESSIONAL ENGINEER

SEP 04 2014

APPROVED MIAMI BEACH FIRE DEPARTMENT

HADDON HALL
1500 COLLINS AVE
MIAMI BEACH, FL

KEYPLAN N.T.S.

REVISIONS

NO.	DESCRIPTION	ISSUE DATE
1	PROGRESS 100% CD SET	02-07-14
2	FIRE & MTCI COMMENTS	08-21-14

100% CONSTRUCTION DOCUMENT SET

NORTH SEAL

Jonathan Cardello
Lic. # AR93391

ADD Inc Architecture Interiors Planning

One Biscayne Tower
Suite 1670
Two South
Biscayne Boulevard
Miami, Fl 33131
T. 305.482.8700
F. 305.482.8770
www.addinc.com
Lic. # AA26001507

Boston Miami

JOB NUMBER:	13036.00
CHECKED BY:	
ISSUE DATE:	MARCH 14, 2014
SCALE:	AS NOTED

SHEET TITLE

ENLARGED UNITS
MECHANICAL PLAN
HADDON HALL SOUTH WING

SHEET NUMBER

M2.04

COPYRIGHT ADD INC 2011

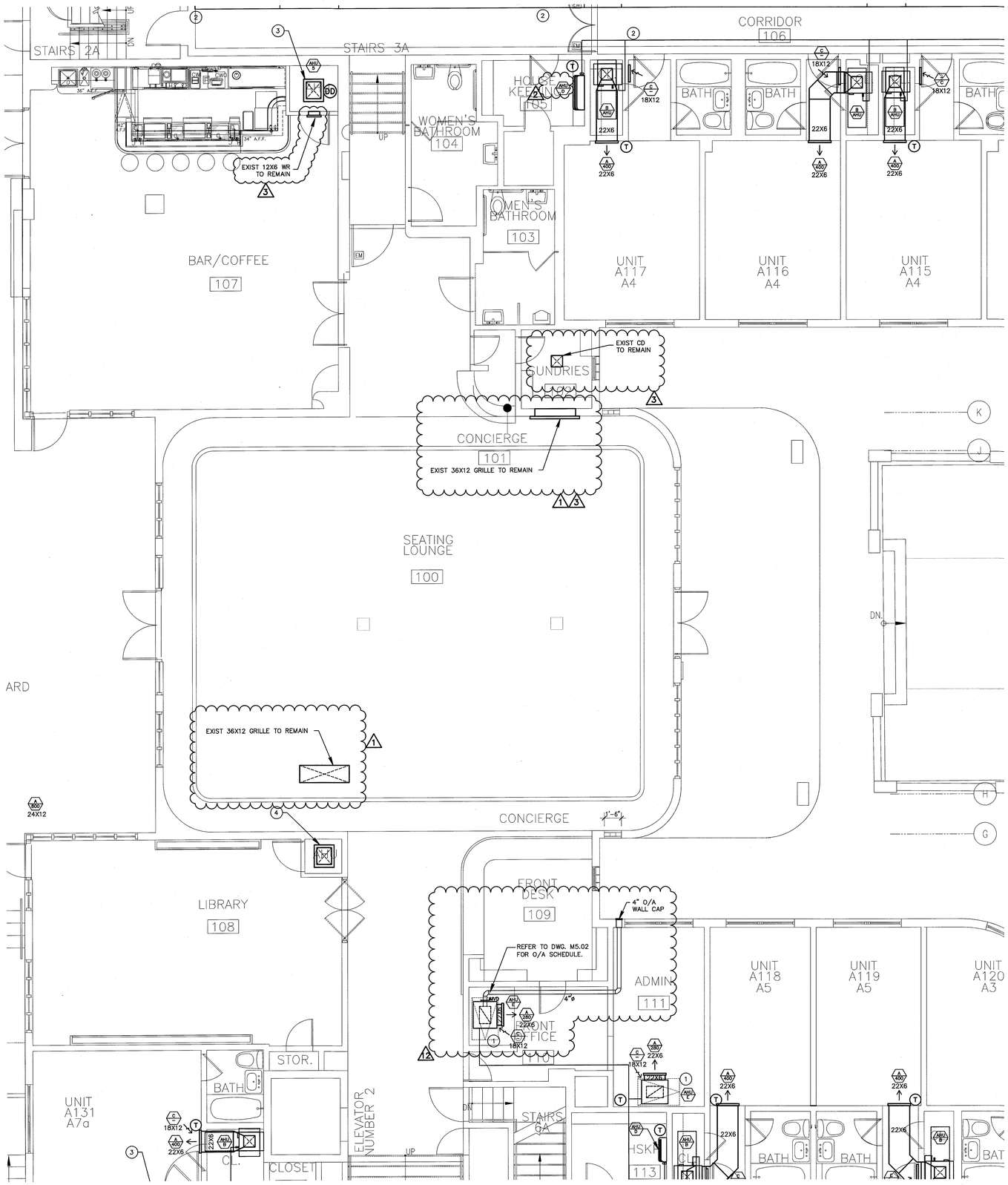

HADDON HALL COMMON AREAS MECHANICAL PLAN

SCALE: 1/4"=1'-0"

HADDON HALL
1500 COLLINS AVE

MIAMI BEACH, FL

KEYPLAN N.T.S.

REVISIONS

NO.	DESCRIPTION	ISSUE DATE
1	PROGRESS 100% CD SET	02-07-14
2	PERMIT REVIEW COMMENTS	03-14-14
3	COORDINATION REVISION	03-14-14
12	FIRE & MTCI COMMENTS	08-21-14

MTCI
PRIVATE PROVIDER SERVICES, LLC
Construction Plan Review, Inspections, Testing & Consulting

	REVIEWER INITIALS	DATE REVIEWED
BUILDING		
STRUCTURAL		
MECHANICAL	CH	11/10/14
ELECTRICAL		
PLUMBING		
SITE CIVIL		

DRAWING NOTES:

1. SOLID ACCESS PANEL MOUNTED AT CEILING BELOW UNIT W/ 18X12 RAG. TYP. FOR ALL.
2. SET OF REF. PIPES BELOW EXISTING CEILING. ARCHITECT TO PROVIDE SOFFIT. COORDINATE W/ I.D. DWG.
3. RECONNECT NEW AHU-5 TO EXIST DUCTWORK. RECCONECT NEW AHU-5 TO EXIST O/A INTAKE, SET MVD @ 525 CFM. PROVIDE SMOKE DUCT DETECTOR.
4. EXISTING AHU TO REMAIN.

DUE TO SPACE CONSTRAINTS TO ACCOMMODATE VERTICAL UNITS SOME GUEST ROOMS MAY BE REQUIRE EQUIVALENT HORIZONTAL UNITS

SEP 04 2014
STEVEN M. FELLER
LICENSE
No. 22046
STATE OF FLORIDA
PROFESSIONAL ENGINEER

APPROVED MIAMI BEACH FIRE DEPARTMENT

KEY PLAN nts

STEVEN FELLER P.E.,PL
FLORIDA P.E. Reg. # 22046
Certificate of Authorization # 00003427
500 N.E. THIRD AVENUE
FORT LAUDERDALE, FLORIDA 33301
PH: 954.467.1402 FAX: 954.467.5752
e-mail: fellerpe@fellerpe.com
JOB # 13153

100% CONSTRUCTION DOCUMENT SET

NORTH SEAL

Jonathan Cardello
Lic. # AR93391

ADD Inc Architecture Interiors Planning

One Biscayne Tower
Suite 1670
Two South
Biscayne Boulevard
Miami, Fl 33131
T. 305.482.8700
F. 305.482.8770
www.addinc.com
Lic. # AA26001507

Boston Miami

JOB NUMBER:	13036.00
CHECKED BY:	
ISSUE DATE:	MARCH 14, 2014
SCALE:	AS NOTED

SHEET TITLE

ENLARGED UNITS
THIRD FLOOR
MECHANICAL PLAN
HADDON HALL COMMON AREA

SHEET NUMBER

M2.05

COPYRIGHT ADD INC 2011

DRAWING NOTES:

1. SOLID ACCESS PANEL MOUNTED AT CEILING BELOW UNIT W/ 18X12 RAG. TYP. FOR ALL.
2. SET OF REF. PIPES AT CEILING SPACE, FIELD VERIFY EXACT LOCATION.
3. SET OF REF. PIPES RISER UP TO ROOF PLAN.
4. SET OF REF. PIPES BELOW CEILING. ARCHITECT TO PROVIDE SOFFIT. COORDINATE W/ I D DWG.
5. EXHAUST DUCT UP TO ROOF IN 2HR FIRE RATED SHAFT W/ GOOSE NECK CAP AND INSECT WIRE MESH SCREEN AT ROOF TERMINATION.
6. 4"ø EXHAUST DUCT FROM FLOOR BELOW UP TO ROOF W/ GOOSE NECK CAP AND INSECT WIRE MESH SCREEN AT ROOF TERMINATION. (2)

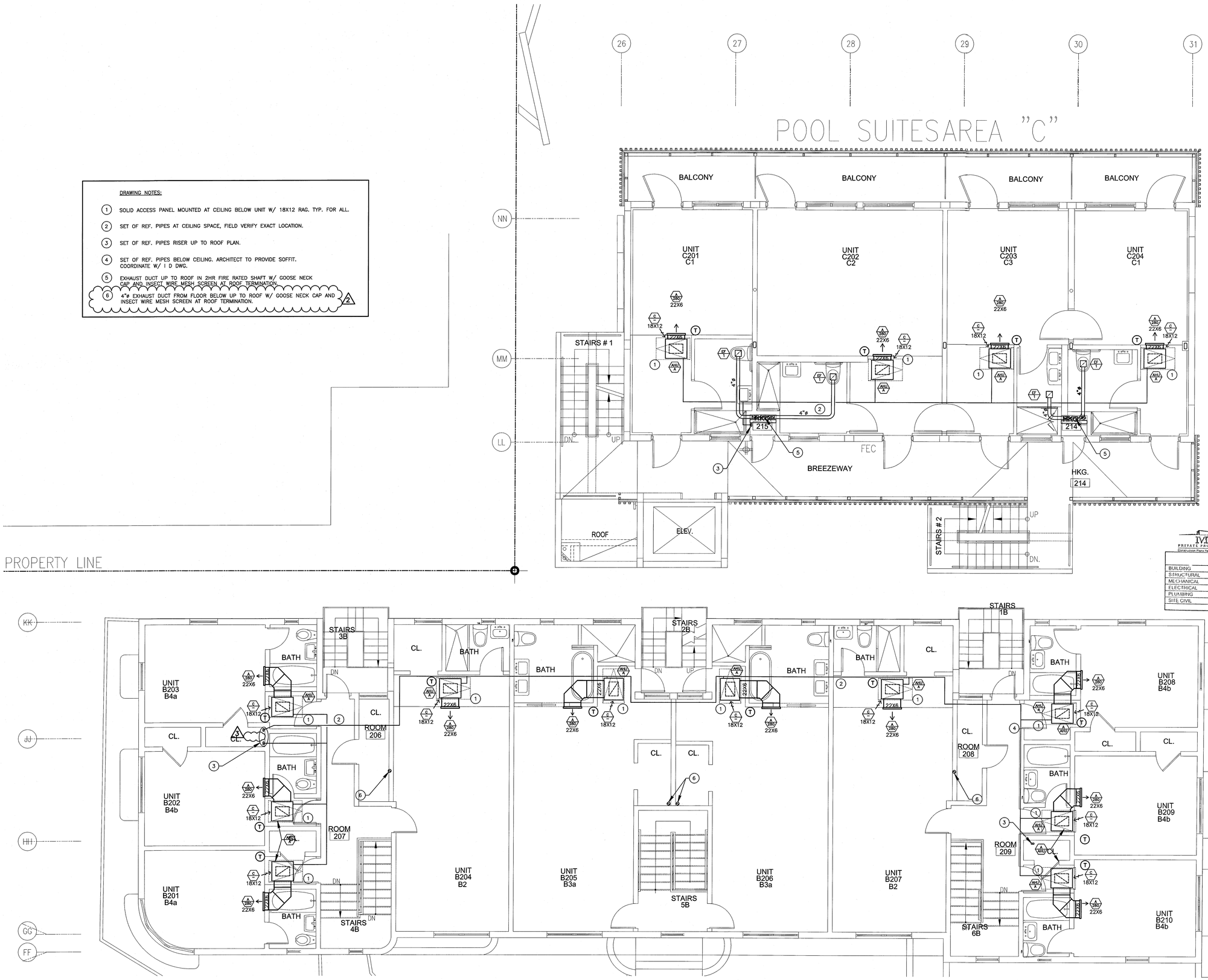

CAMPTON 2FL / POOL 2FL & 3FL ENLARGED UNITS MECHANICAL PLAN

SCALE: 1/4"=1'-0"

HADDON HALL
1500 COLLINS AVE
MIAMI BEACH, FL

KEYPLAN N.T.S.

REVISIONS

NO.	DESCRIPTION	ISSUE DATE
1	BLDG DEPARTMENT COMMENT	03-18-13
2	PERMIT REVIEW COMMENTS	03-14-14
3	COORDINATION REVISION	03-14-14

MTCI PRIVATE PROVIDER SERVICES, LLC
Construction Plans Review, Inspections, Testing & Consulting

	REVIEWER INITIALS	DATE REVIEWED
BUILDING		
STRUCTURAL		
MECHANICAL		11/10/14
ELECTRICAL		
PLUMBING		
SITE CIVIL		

100% CONSTRUCTION DOCUMENT SET

NORTH SEAL

Jonathan Cardello
Lic. # AR93391

ADD Inc Architecture Interiors Planning

One Biscayne Tower
Suite 1670
Two South
Biscayne Boulevard
Miami, Fl 33131
T. 305.482.8700
F. 305.482.8770
www.addinc.com
Lic. # AA26001507

Boston Miami

JOB NUMBER: 13036.00
CHECKED BY:
ISSUE DATE: MARCH 14, 2014
SCALE: AS NOTED

SHEET TITLE

ENLARGED UNITS
MECHANICAL PLAN
CAMPTON 2FL
POOL 2FL & 3FL
UNITS

SHEET NUMBER

M2.06

COPYRIGHT ADD INC 2011

KEY PLAN nts

STEVEN FELLER P.E.,PL
FLORIDA P.E. Reg. # 22046
Certificate of Authorization # 00003427
500 N.E. THIRD AVENUE
FORT LAUDERDALE, FLORIDA 33301
PH: 954.467.1402 FAX: 954.467.5752
e-mail: fellerpe@fellerpe.com
JOB # 13153

STEVEN M. FELLER LICENSE No. 22046 STATE OF FLORIDA PROFESSIONAL ENGINEER

SEP 04 2014

APPROVED MIAMI BEACH FIRE DEPARTMENT

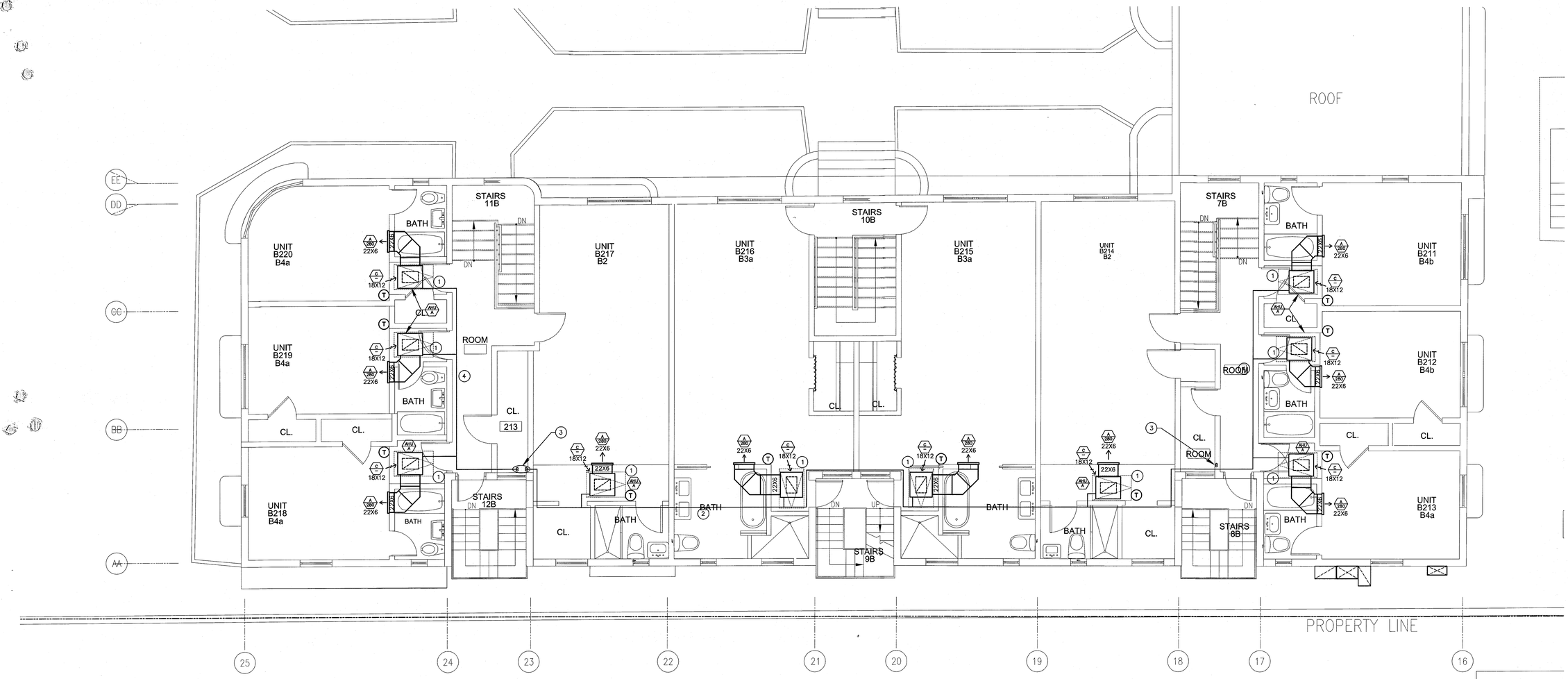

	REVIEWER INITIALS	DATE REVIEWED
BUILDING		
STRUCTURAL		
MECHANICAL		11/10/14
ELECTRICAL		
PLUMBING		
SITE CIVIL		

DRAWING NOTES:

1. SOLID ACCESS PANEL MOUNTED AT CEILING BELOW UNIT W/ 18X12 RAG. TYP. FOR ALL.
2. SET OF REF. PIPES AT CEILING SPACE, FIELD VERIFY EXACT LOCATION.
3. SET OF REF. PIPES RISER UP TO ROOF PLAN.
4. SET OF REF. PIPES BELOW CEILING. ARCHITECT TO PROVIDE SOFFIT. COORDINATE W/ I D DWG.

CAMPTON 2FL ENLARGED UNITS MECHANICAL PLAN

SCALE: 1/4"=1'-0"

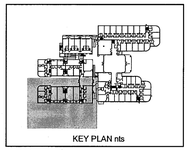

KEY PLAN nts

STEVEN FELLER P.E.,PL
FLORIDA P.E. Reg. # 22046
Certificate of Authorization # 00003427
500 N.E. THIRD AVENUE
FORT LAUDERDALE, FLORIDA 33301
PH: 954.467.1402 FAX: 954.467.5752
e-mail: fellerpe@fellerpe.com
JOB # 13153

SEP 04 2014

STEVEN M. FELLER LICENSE No 22046 STATE OF FLORIDA PROFESSIONAL ENGINEER

APPROVED MIAMI BEACH FIRE DEPARTMENT

HADDON HALL
1500 COLLINS AVE

MIAMI BEACH, FL

KEYPLAN N.T.S.

REVISIONS

NO.	DESCRIPTION	ISSUE DATE

100% CONSTRUCTION DOCUMENT SET

NORTH SEAL

Jonathan Cardello
Lic. # AR93391

ADD Inc Architecture Interiors Planning

One Biscayne Tower
Suite 1670
Two South
Biscayne Boulevard
Miami, Fl 33131
T. 305.482.8700
F. 305.482.8770
www.addinc.com
Lic. # AA26001507

Boston Miami

JOB NUMBER:	13036.00
CHECKED BY:	
ISSUE DATE:	MARCH 14, 2014
SCALE:	AS NOTED

SHEET TITLE

ENLARGED UNITS
MECHANICAL PLAN
CAMPTON 2FL

SHEET NUMBER

M2.07

COPYRIGHT ADD INC 2011

HADDON HALL
1500 COLLINS AVE

MIAMI BEACH, FL

KEYPLAN N.T.S.

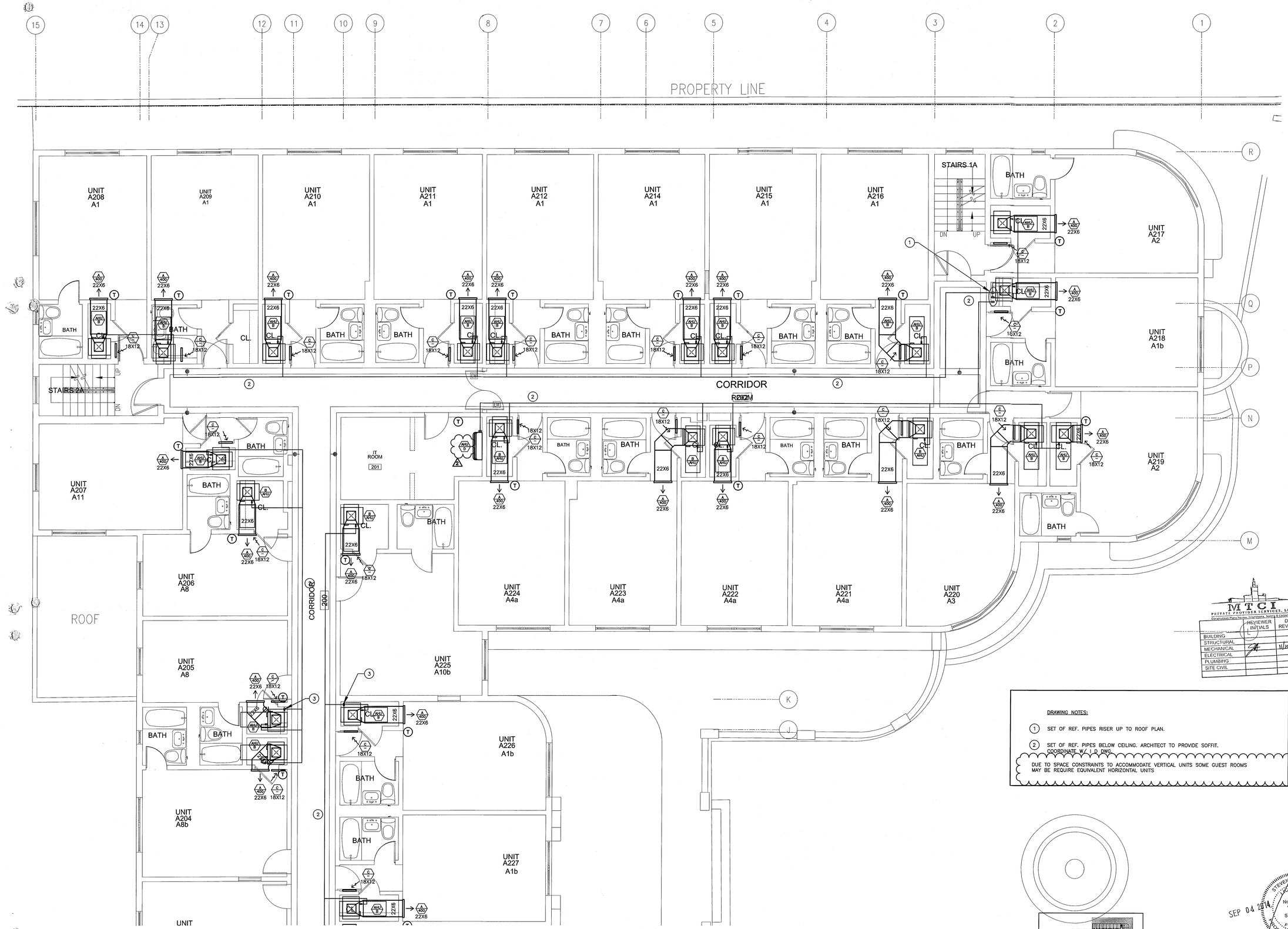

REVISIONS		
NO.	DESCRIPTION	ISSUE DATE
1	PROGRESS 100% CD SET	02-07-14
2	COORDINATION REVISION	03-14-14

100% CONSTRUCTION DOCUMENT SET

NORTH SEAL

Jonathan Cardello
Lic. # AR93391

ADD Inc Architecture Interiors Planning

One Biscayne Tower
Suite 1670
Two South
Biscayne Boulevard
Miami, Fl 33131
T. 305.482.8700
F. 305.482.8770
www.addinc.com
Lic. # AA26001507

Boston Miami

JOB NUMBER: 13036.00
CHECKED BY:
ISSUE DATE: MARCH 14, 2014
SCALE: AS NOTED

SHEET TITLE

ENLARGED UNITS
MECHANICAL PLAN
HADDON HALL
2FL & 3FL

SHEET NUMBER

M2.08

COPYRIGHT ADD INC 2011

MTCI
PRIVATE PROVIDER SERVICES, LLC
Construction Plans Review, Inspections, Testing & Consulting

	REVIEWER INITIALS	DATE REVIEWED
BUILDING		
STRUCTURAL		
MECHANICAL		11/18/14
ELECTRICAL		
PLUMBING		
SITE CIVIL		

DRAWING NOTES:

1. SET OF REF. PIPES RISER UP TO ROOF PLAN.
2. SET OF REF. PIPES BELOW CEILING. ARCHITECT TO PROVIDE SOFFIT. COORDINATE W/ I.D. DWG.

DUE TO SPACE CONSTRAINTS TO ACCOMMODATE VERTICAL UNITS SOME GUEST ROOMS MAY BE REQUIRE EQUIVALENT HORIZONTAL UNITS

1

HADDON HALL 2FL & 3FL FLOOR ENLARGED UNITS MECHANICAL PLAN

SCALE: 1/4"=1'-0"

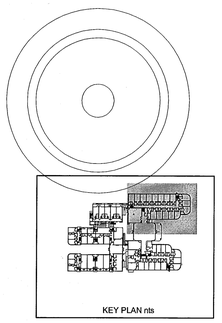

KEY PLAN nts

SEP 04 2014

STEVEN FELLER LICENSE No 22045 STATE OF FLORIDA PROFESSIONAL ENGINEER

APPROVED MIAMI BEACH FIRE DEPARTMENT

STEVEN FELLER P.E., PL
FLORIDA P.E. Reg. # 22045,
Certificate of Authorization # 00003427
500 N.E. THIRD AVENUE
FORT LAUDERDALE, FLORIDA 33301
PH: 954.467.1402 FAX: 954.467.5752
e-mail: fellerpe@fellerpe.com
JOB # 13153

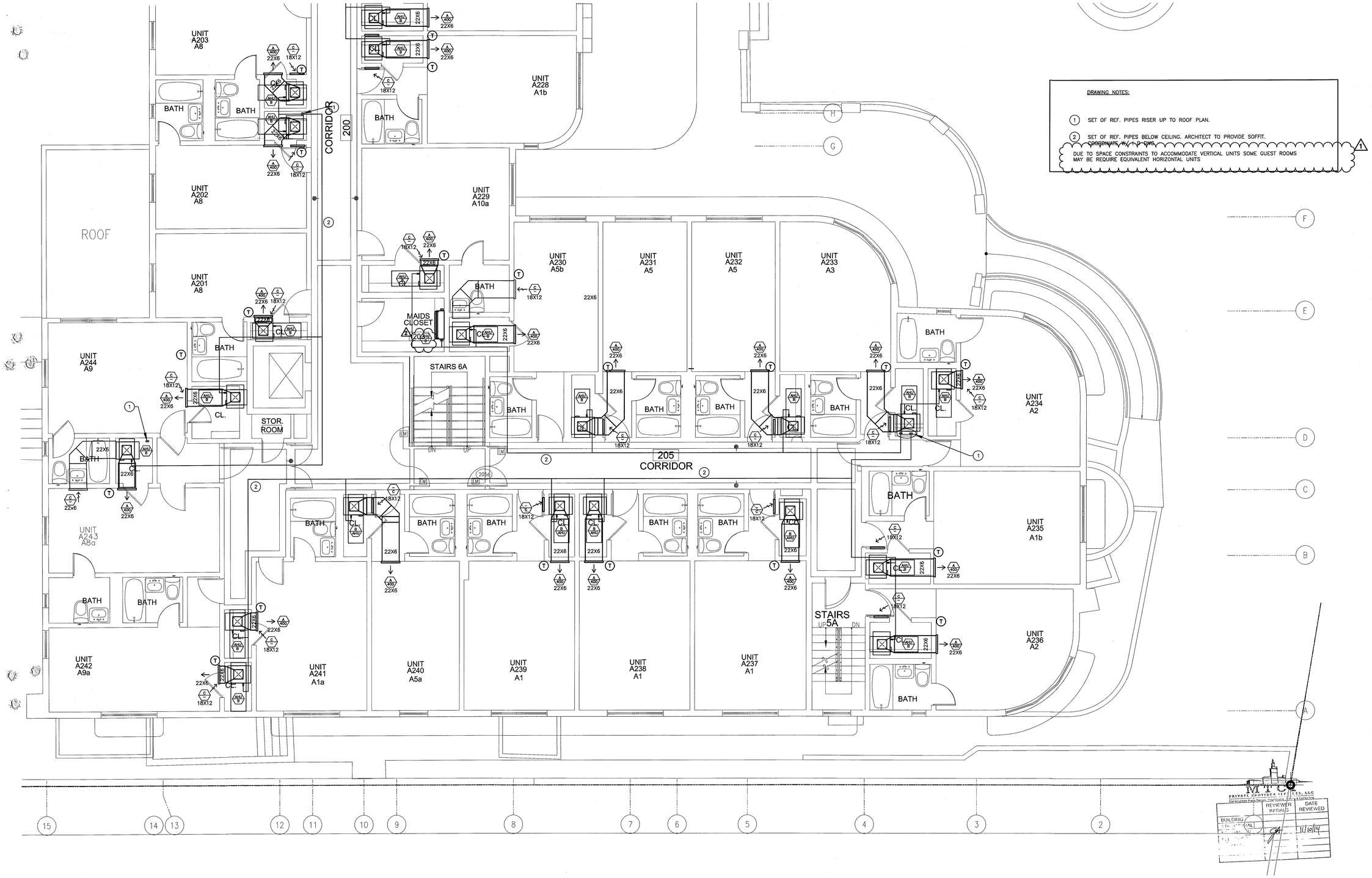

DRAWING NOTES:

1. SET OF REF. PIPES RISER UP TO ROOF PLAN.
2. SET OF REF. PIPES BELOW CEILING. ARCHITECT TO PROVIDE SOFFIT. ~~COORDINATE W/ ARCH.~~

1 DUE TO SPACE CONSTRAINTS TO ACCOMMODATE VERTICAL UNITS SOME GUEST ROOMS MAY BE REQUIRE EQUIVALENT HORIZONTAL UNITS

PRIVATE PROVIDER SERVICES, LLC
Carmelisah Pierre-Neuse
Certificate # 0000000 Expires 1 Year From Issuance

BUILDING	REVIEWER INITIALS	DATE REVIEWED
STRUCTURAL	JH	11/10/14

HADDON HALL 2FL & 3FL ENLARGED UNITS MECHANICAL PLAN

SCALE: 1/4"=1'-0"

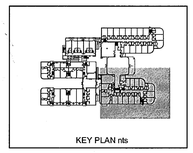

STEVEN FELLER P.E., P.A.
FLORIDA P.E. Reg. # 22046
Certificate of Authorization # 00003427
500 N.E. THIRD AVENUE
FORT LAUDERDALE, FLORIDA 33301
PH: 954.467.1402 FAX: 954.467.3752
e-mail: fellerpe@fellerpe.com
JOB # 13153

STEVEN M. FELLER LICENSE No 22046 STATE OF FLORIDA PROFESSIONAL ENGINEER

SEP 04 2014

APPROVED MIAMI BEACH FIRE DEPARTMENT

HADDON HALL
1500 COLLINS AVE

MIAMI BEACH, FL

KEYPLAN N.T.S.

REVISIONS

NO.	DESCRIPTION	ISSUE DATE
1	PROGRESS 100% CD SET	02-07-14
2	COORDINATION REVISION	03-14-14

100% CONSTRUCTION DOCUMENT SET

NORTH SEAL

Jonathan Cardello
Lic. # AR93391

ADD Inc Architecture Interiors Planning

One Biscayne Tower
Suite 1670
Two South
Biscayne Boulevard
Miami, Fl 33131
T. 305.482.8700
F. 305.482.8770
www.addinc.com
Lic. # AA26001507

Boston Miami

JOB NUMBER:	13036.00
CHECKED BY:	
ISSUE DATE:	MARCH 14, 2014
SCALE:	AS NOTED

SHEET TITLE

ENLARGED UNITS
MECHANICAL PLAN
HADDON HALL
2FL & 3FL

SHEET NUMBER

M2.09

COPYRIGHT ADD INC 2011

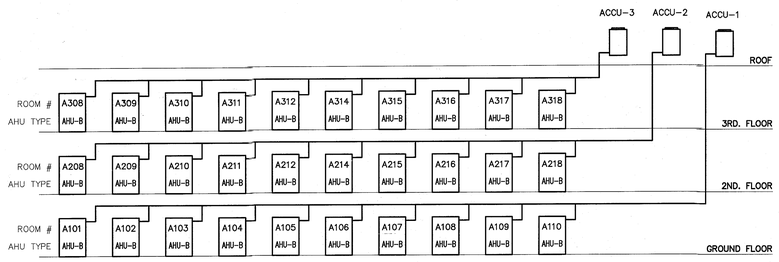

HADDON HALL UNITS
NORTH WING
NORTH EXP.

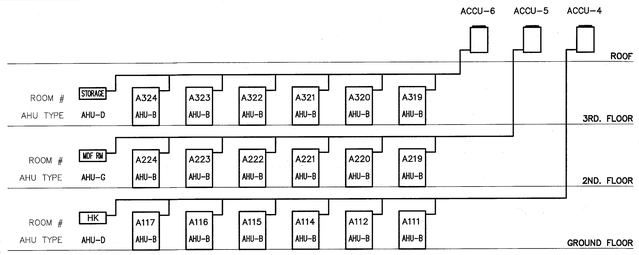

HADDON HALL UNITS
NORTH WING
SOUTH EXP.

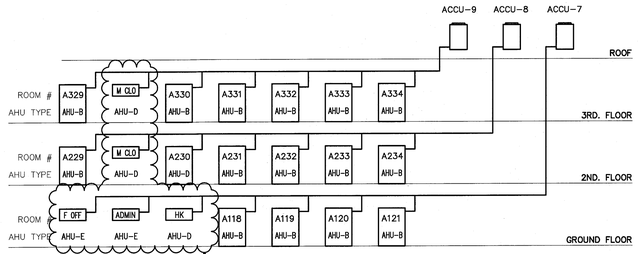

HADDON HALL UNITS
SOUTH WING
NORTH EXP.

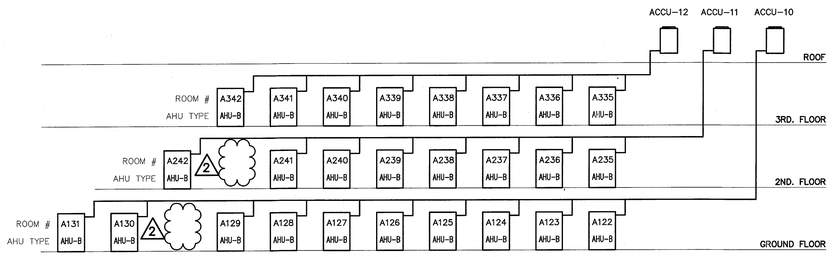

HADDOND HALL UNITS
SOUTH WING
SOUTH EXP.

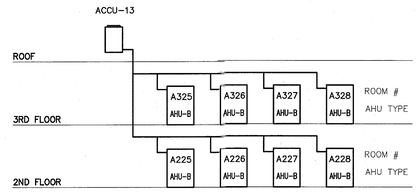

HADDON HALL
CORE UNITS
EAST EXP.

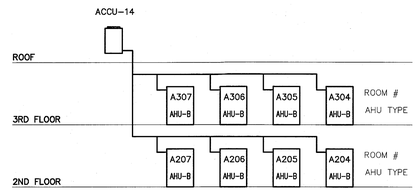

HADDON HALL
CORE UNITS
NW EXP.

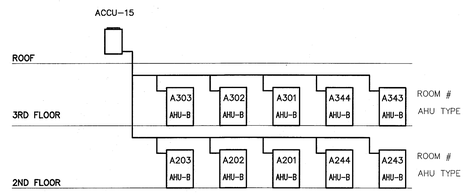

HADDON HALL
CORE UNITS
SW EXP.

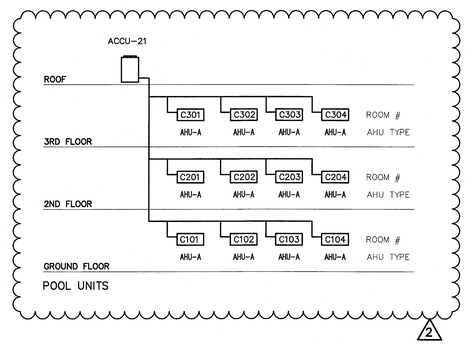

POOL UNITS

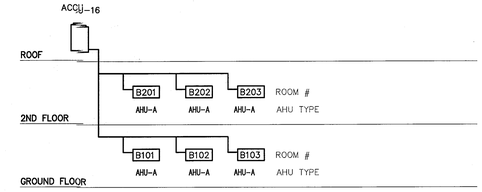

CAMPTON UNITS
NORTH WING
WEST EXP.

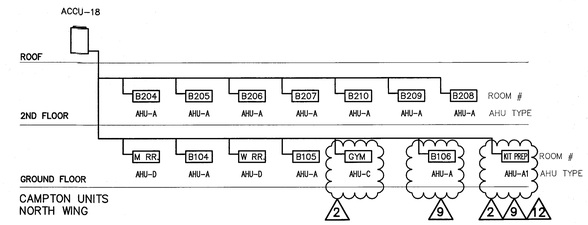

CAMPTON UNITS
NORTH WING

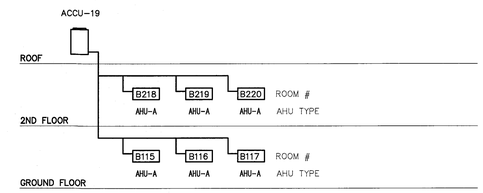

CAMPTON UNITS
SOUTH WING
WEST EXP.

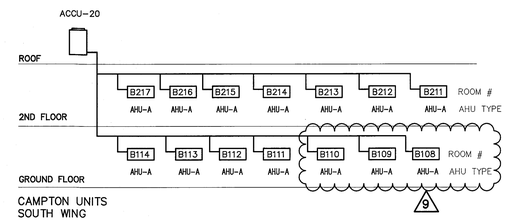

CAMPTON UNITS
SOUTH WING

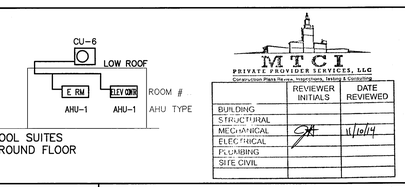

POOL SUITES
GROUND FLOOR

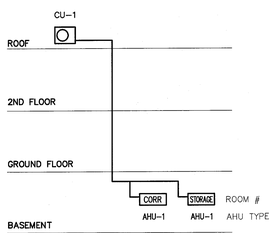

CAMPTON NORTH
BASEMENT

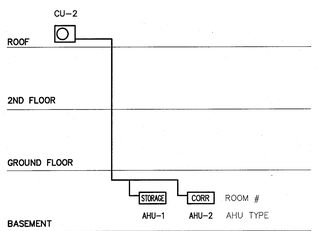

CAMPTON SOUTH
BASEMENT

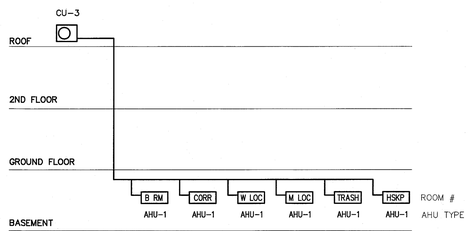

HADDON HALL
BASEMENT

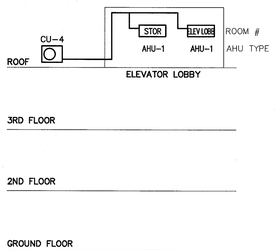

HADDON HALL
ELEV LOBBY

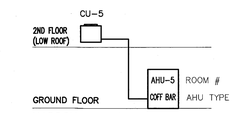

HADDON HALL BAR/
COFFEE-BAR

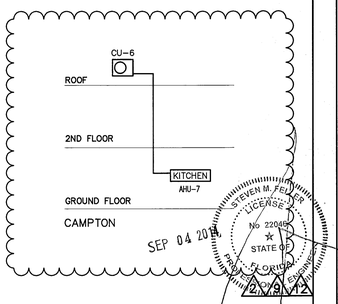

DX RISER SCHEMATIC DIAGRAM

SCALE: NTS

STEVEN FELLER P.E.,PL
FLORIDA P.E. Reg. # 22046
Certificate of Authorization # 00003427
500 N.E. THIRD AVENUE
FORT LAUDERDALE, FLORIDA 33301
PH: 954.467.1402 FAX: 954.467.5752
e-mail: fellerpe@fellerpe.com
JOB # 13153

APPROVED
MIAMI BEACH
FIRE DEPARTMENT

HADDON HALL
1500 COLLINS AVE

MIAMI BEACH, FL

KEYPLAN N.T.S.

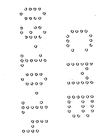

REVISIONS

NO.	DESCRIPTION	ISSUE DATE
1	PROGRESS 100% CD SET	02-18-14
2	COORDINATION REVISION	03-14-14
9	KITCHEN RELOCATION	05-30-14
12	FIRE & MTCI COMMENTS	08-21-14

100% CONSTRUCTION DOCUMENT SET

NORTH SEAL

Jonathan Cardello
Lic. # AR93391

ADD Inc Architecture Interiors Planning

One Biscayne Tower
Suite 1670
Two South
Biscayne Boulevard
Miami, Fl 33131
T. 305.482.8700
F. 305.482.8770
www.addinc.com
Lic. # AA26001507

Boston Miami

JOB NUMBER: 13036.00
CHECKED BY:
ISSUE DATE: MARCH 14, 2014
SCALE: AS NOTED

SHEET TITLE

MECHANICAL SYSTEM
DX RISER SCHEMATIC
DIAGRAM

SHEET NUMBER

M4.01

COPYRIGHT ADD INC 2011

VRV AIR HANDLING UNIT SCHEDULE (HEAT PUMP)

MARK (MOUNTING)	SELECTION BASED ON: MAKE	MODEL NO.	ELECTRICAL	COOLING CAPACITY BTU/H	HEATING CAPACITY BTU/H	MCA A	MOP A	REFRIGERANT	REFRIGERANT CONTROL	AIRFLOW RATE H/L	WEIGHT	HEIGHT	WIDTH	DEPTH	SOUND DB	S.P.	LIQUID LINE	GAS LINE	
AHU-A (1 TON) HORIZ. SLIM	DAIKIN	FXDQ12MVJU	208-230/1/60	12,000	13,500	0.9	15	R-410A	ELECTRONIC EXPANSION VALVE	280	51	11-13/16	21-5/8	27-9/16	33	0.40	1/4	1/2	
AHU-B (1 TON) VERTICAL	DAIKIN	FXTQ12PAVJU	208-230/1/60	12,000	13,500	1.1	15	R-410A	EXPANSION	400	119	46-3/4	19-1/2	27-9/16	22	0.50	1/4	1/2	
AHU-C (2.5 TON) HORIZ. DUCTED	DAIKIN	FXMQ30PVJU	208-230/1/60	30,000	34,000	2.3	15	R-410A	ELECTRONIC EXPANSION VALVE	883	80	11-13/16	39-3/8	27-9/16	43	0.80	3/8	5/8	
AHU-D (0.6 TON) HIGH WALL	DAIKIN	FXAQ07PVJU	208-230/1/60	7,500	8,500	0.4	15	R-410A	ELECTRONIC EXPANSION VALVE	260	26	11-3/8	31-1/4	9-1/4	36	–	1/4	1/2	
AHU-E (0.6 TON) HORIZ. SLIM	DAIKIN	FXDQ07MVJU	208-230/1/60	7,500	8,500	0.9	15	R-410A	ELECTRONIC EXPANSION VALVE	280	51	7-7/8	27-9/16	24-7/16	33	0.12	1/4	1/2	
AHU-F (1.0 TON) CEILING SUSPENDED	DAIKIN	FXHQ12MVJU	208-230/1/60	12,000	13,500	0.8	15	R-410A	ELECTRONIC EXPANSION VALVE	410	53	7-11/16	37-13/16	26-3/4	38	–	1/4	1/2	
2 12 AHU-A1 (1.5 TON) HORIZ. SLIM	DAIKIN	FXDQ18MVJU	208-230/1/60	18,000	20,000	1.3	15	R-410A	ELECTRONIC EXPANSION VALVE	440	63	7-7/8	35-7/16	24-7/16	33	0.17	1/4	1/2	2

VRV-III HEAT PUMPS & MULTISPLIT SYSTEM

1- DAIKIN BASIS OF DESIGN, PANASONIC, SAMSUNG, MITSUBISHI, WILL BE CONSIDERED PER APPROVED\ EQUALS.
2- PROVIDE 7 YEARS COMPRESSOR WARRANTY, 1 TEAR PARTS IN CONDENSING UNITS & FAN COIL IVERTER TYPE COMPRESSION WITH.
3- PROVIDE INTELLIGENT TOUCH MANAGER COMPLETE W/D-III PLUS ADAPTER.
12 4- FURNISH AND INSTALL ALL AHU'S W/ FACTORY MOUNTED CONDENSATE PUMP W/ DISCHARGE CHECK VALVE AND FLOAT SWITCH TO AUTOMATICALLY SHUT DOWN UNIT IF FAILURE.
5- REFER TO RISER DIAGRAM FOR CONDENSING UNITS TYPES & LOCATION.
6- MAINTAIN REFRIGERANT PIPING WITHIN MANUFACTURER'S RECOMMENDED LENGTHS. DO NOT EXCEED LIMITATIONS.
7- PROVIDE REFRIGERANT PIPE DIAMETERS PER MANUFACTURERS RECOMMENDATIONS & CALCULATIONS. COORDINATE W/ MANUFACTURER FOR ALL PIPE SIZING CALCULATIONS.
8- PROVIDE REFRIGERANT PIPE JOINTS IN ACCORDANCE W/MANUFACTRERS REQUIREMENTS AND APPROVED MANUFACTURER'S METHODS.

VRV CONDENSER UNIT SCHEDULE (HEAT PUMP)

	PERFORMANCE												FAN	REFRIGERANT PIPING				UNIT	
MARK (AHU)	SELECTION BASED ON: MAKE	MODEL NO.	ELECTRICAL	COOLING CAPACITY BTU/H	HEATING CAPACITY BTU/H	OPERATING RATING COOLING	OPERATING RATING HEATING	IEER	MCA A	MOP A	RLA A	SOUND DB	AIRFLOW CFM	VERTICAL PIPE LENGTH ABOVE	VERTICAL PIPE LENGTH BELOW	ACTUAL PIPE LENGTH	EQUIVALENT PIPE LENGTH	WEIGHT LBS.	DIMENSIONS (HxWxD)
2 ACCU-4,6,7,8,9,16,~~17~~,19 (6 TON)	DAIKIN	RXYQ72PBTJ	208-230/3/60	72,000	77,000	23-110	0-77	25.8/21.5	30	35	14.2	57	8,230	164 (295 WITH OPTION)	295	540	620	420	66-1/8"x36-5/8"x30-1/8"
ACCU-11,12,13,14 (8 TON)	DAIKIN	RXYQ96PBTJ	208-230/3/60	96,000	108,000	23-110	0-77	23.0/18.0	43	50	7.8+16.8	60	8,300	164 (295 WITH OPTION)	295	540	620	620	66-1/8"x48-7/8"x30-1/8"
9 ACCU-1,2,3,10,15 (10 TON)	DAIKIN	RXYQ120PBTJ	208-230/3/60	120,000	135,000	23-110	0-77	20.4/17.2	43	50	10.6+16.8	60	8,230+8,230	164 (295 WITH OPTION)	295	540	620	620	66-1/8"x48-7/8"x30-1/8" 2
2 9 ACCU-18, 20 (15 TON)	DAIKIN	RXYQ192PBTJ	208-230/3/60	184,000	206,000	23-110	0-77	19.9/19.1	43+30	50+35	(10.8+16.8)+14.2	62	8,230+6,350	164 (295 WITH OPTION)	295	540	620	1040	66-1/8"x48-7/8"x30-1/8" +66-1/8"x36-5/8"x30-1/8"
ACCU-21 (14 TON)	DAIKIN	RXYQ168PBTJ	208-230/3/60	160,000	180,000	23-110	0-77	22.2/20.2	43+30	50+35	(7.8+16.8)+14.2	62	8,230+8,230	164 (295 WITH OPTION)	295	540	620	860	66-1/8"x36-5/8"x30-1/8" +66-1/8"x48-7/8"x30-1/8"

9

SPLIT DUCTED INDOOR UNIT SCHEDULE (HEAT PUMP)

MARK (MOUNTING)	SELECTION BASED ON: MAKE	MODEL NO.	ELECTRICAL	COOLING CAPACITY BTU/H	HEATING CAPACITY BTU/H	AIRFLOW CFM	WEIGHT	SUCTION LINE	LIQUID LINE	SOUND DB	SEER
AHU-7 (3.0 TON) DCUT CONCEALED	DAIKIN	FBQ36PVJU	208-230/1/60	36000	27200	1130	102	5/8"	3/8"	39	17.5

SPLIT CONDENSER UNIT SCHEDULE (HEAT PUMP)

MARK (AHU)	SELECTION BASED ON: MAKE	MODEL NO.	ELECTRICAL	COOLING CAPACITY BTU/H	HEATING CAPACITY BTU/H	SEER/EER	MCA A	MOP A	SUCTION LINE	LIQUID LINE	DIMENSIONS (HxWxD)	WEIGHT
CU-7	DAIKIN	RZQ36PVJU9	208-230/1/60	36000	27500	16.3/10.8	27	30	5/8"	3/8"	53X17X17	283

FAN SCHEDULE

MARK	SELECTION BASED ON: MAKE	MODEL NO.	TYPE	CFM	STATIC PRESSURE	VOLT/ø/HZ	SPEED CONTROLLER UNIT MOUNTED	WATTS	CONTROL	SERVICE	SONES
EF-1	GREENHECK	SP-A50	CABINET	50	0.1	120/1/60	YES	18.3	MOTION SENSOR	TOILETS	0.8

AIR DISTRIBUTION SCHEDULE

MARK	USE	MATERIAL	FRAME	ACCESSORIES	FINISH	MAKE AND MODEL NO.	REMARKS
A	SUPPLY	ALUMINUM	*	OBD	**	TITUS 272 FS	1
B	SUPPLY	ALUMINUM	*	OBD	**	TITUS TDC-AA	1
C	RETURN/ EXHAUST	ALUMINUM	*	OBD	**	TITUS 4FL	1

GENERAL NOTE:

1. TITUS IS THE BASIS OF DESIGN AND THE STANDARD FOR COMPARISON.
2. PROVIDE LOCKABLE TYPE O.B.O.
3. PROVIDE 24X24 PANEL.
4. COORDINATE CEILING MOUNTING APPROACH AND PROVIDE REQUIRED HARDWARE FOR DIFFERENT CEILING TYPES WITH MANUFACTURES RECOMMENDATIONS.

* REFER TO ARCH'S PLANS FOR CEILING/WALL TYPE.
** OFF WHITE FINISH (SUBJECT TO ARCHITECTS APPROVAL).

DIFFUSER LEGEND

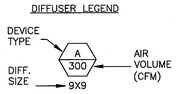

MULTISPLIT WALL MOUNTED INDOOR UNIT SCHEDULE (HEAT PUMP)

MARK (MOUNTING)	SELECTION BASED ON: MAKE	MODEL NO.	ELECTRICAL	COOLING CAPACITY BTU/H	HEATING CAPACITY BTU/H	AIRFLOW CFM	WEIGHT	SUCTION LINE	LIQUID LINE	SOUND DB
AHU-1 (0.6 TON) HIGH WALL	DAIKIN	CTXS07LVJU	208-230/1/60	7000	850	350	20	3/8"	1/4"	38
AHU-2 (1 TON) HIGH WALL	DAIKIN	CTXS12LVJU	208-230/1/60	11500	11500	400	20	3/8"	1/4"	45

MULTISPLIT CONDENSER UNIT SCHEDULE (HEAT PUMP)

MARK (AHU)	SELECTION BASED ON: MAKE	MODEL NO.	ELECTRICAL	COOLING CAPACITY BTU/H	HEATING CAPACITY BTU/H	SEER/EER	MCA A	MOP A	SUCTION LINE	LIQUID LINE	DIMENSIONS (HxWxD)	WEIGHT
CU-1,4&6	DAIKIN	2MXS18GVJU	208-230/1/60	18,000	22,000	16.3/10.8	11.1	20	3/8"	1/4"	29X33X12	139
CU-2	DAIKIN	3MXS24GVJU	208-230/1/60	24,000	30,000	16.3/12.5	17.8	20	3/8"	1/4"	31X17X13	168
CU-3	DAIKIN	RMXS48LVJU	208-230/1/60	48,000	54,000	16.3/10.8	27	30	3/4"	3/8"	53X17X13	283

2

SPLIT SYSTEM VERTICAL INDOOR UNIT SCHEDULE

MARK (MOUNTING)	SELECTION BASED ON: MAKE	MODEL NO.	ELECTRICAL	COOLING CAPACITY BTU/H	HEATER KW MOP	AIRFLOW CFM	MOTOR HP	MOTOR RPM	MOTOR FLA	MOTOR LRA	MOTOR MCA	MOP A	WEIGHT	REFRIG.	SUCTION LINE	LIQUID LINE
AHU-5 (7.5 TON) VERTICAL	DAIKIN	DAR0904A	208-230/3/60	90,000	15 50	3000	1.5	–	5.2	35	6.5	15	405	R-410A	1-1/8"	5/8"

SPLIT SYSTEM CONDENSER UNIT SCHEDULE

MARK (AHU)	SELECTION BASED ON: MAKE	MODEL NO.	ELECTRICAL	EER SEER	COOLING CAPACITY BTU/H	HEATING CAPACITY BTU/H	COMPRESSOR RLA A	FAN FLA A	FAN HP	REFRIG.	SUCTION LINE	LIQUID LINE	DIMENSIONS (HxWxD)	WEIGHT	MCA A	MOP A
CU-5	DAIKIN	DX115A	208-230/3/60	11.2 11.5	90,000		25.0	5.6	1.0	R-410A	1-3/8"	5/8"	36X36X37	315	36.9	60

MECHANICAL SCHEDULES
SCALE: NTS

STEVEN FELLER P.E., PL
FLORIDA P.E. Reg. # 22046
Certificate of Authorization # 00003470
500 N.E. THIRD AVENUE
FORT LAUDERDALE, FLORIDA 33301
PH: 954.467.1402 FAX: 954.467.5752
e-mail: felleripe@felleripe.com
JOB # 13153

SEP 04 2014
STATE OF FLORIDA

HADDON HALL
1500 COLLINS AVE
MIAMI BEACH, FL

KEYPLAN N.T.S.

REVISIONS

NO.	DESCRIPTION	ISSUE DATE
1	PROGRESS 100% CD SET	02-18-14
2	COORDINATION REVISION	03-14-14
9	KITCHEN RELOCATION	05-30-14
12	FIRE & MTCI COMMENTS	08-21-14

MTCI
PRIVATE PROVIDER SERVICES, LLC
Construction Plans Review, Inspections, Testing & Consulting

	REVIEWER INITIALS	DATE REVIEWED
BUILDING		
STRUCTURAL		
MECHANICAL	SH	11/10/14
ELECTRICAL		
PLUMBING		
SITE CIVIL		

100% CONSTRUCTION DOCUMENT SET

NORTH SEAL

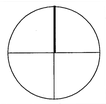

Jonathan Cardello
Lic. # AR93391

ADD Inc Architecture Interiors Planning

One Biscayne Tower
Suite 1670
Two South
Biscayne Boulevard
Miami, Fl 33131
T. 305.482.8700
F. 305.482.8770
www.addinc.com
Lic. # AA26001507

Boston Miami

JOB NUMBER: 13036.00
CHECKED BY:
ISSUE DATE: MARCH 14, 2014
SCALE: AS NOTED

SHEET TITLE

MECHANICAL SCHEDULES

SHEET NUMBER

M5.01

COPYRIGHT ADD INC 2011

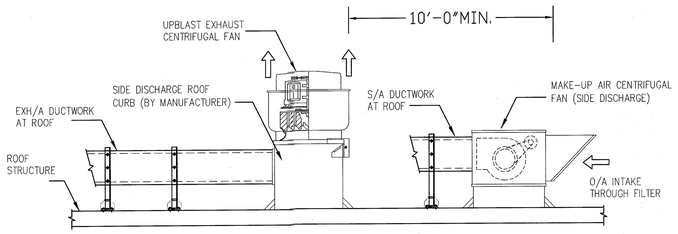

KITCHEN EXHAUST / SUPPLY FAN DETAIL

N.T.S.

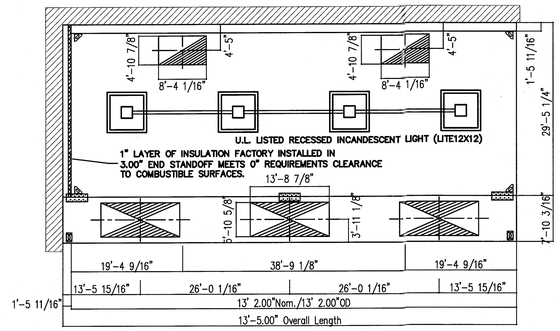

PLAN VIEW – Hood

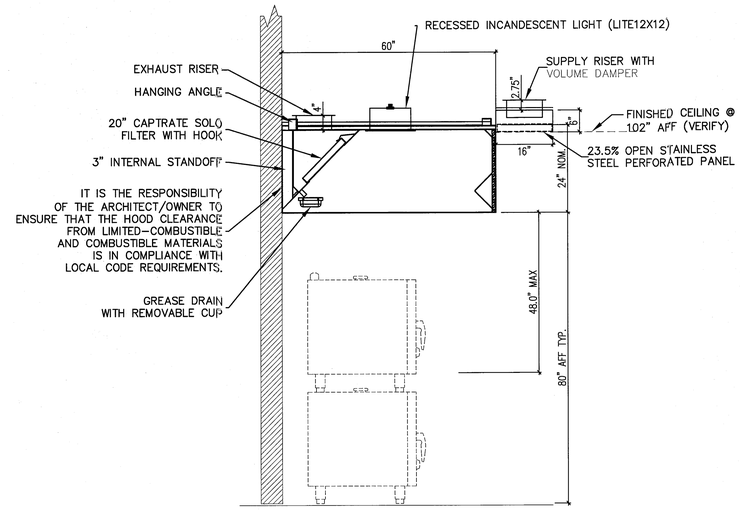

HOOD VENTILATION DETAILS

NTS

SECTION 5

NTS

HADDON HALL
1500 COLLINS AVE

MIAMI BEACH, FL

KEYPLAN N.T.S.

REVISIONS

NO.	DESCRIPTION	ISSUE DATE
1	PROGRESS 100% CD SET	02-18-14
2	PERMIT REVIEW COMMENTS	03-14-14
9	KITCHEN RELOCATION	05-30-14
12	FIRE & MTCI COMMENTS	08-21-14

KITCHEN AIR BALANCE SCHEDULE

DESCRIPTION	EXHAUST AIR CFM	SUPPLY AIR CFM	RETURN AIR CFM	O/A AIR CFM	PRESS DIFF CFM
HEAT / COOL AC UNIT	–	+1200	-900	+300	+300
HOOD EXHAUST FAN	-3896	–	–	–	-3896
MUA SUPPLY FAN	–	–	–	+2532	+2532
DISHWASHER EXHAUST	–	–	–	–	–
VENTILATION	–	–	–	+800	+800
TOTAL					-264
KITCHEN AREA IS 264 CFM UNDER NEGATIVE PRESSURE					

PERFORATED SUPPLY PLENUM(S)

HOOD NO.	TAG	POS.	LENGTH	WIDTH	HEIGHT	TYPE	RISER(S) WIDTH	LENG.	DIA.	CFM	S.P.
2	122	FRONT	161"	16"	6"	MUA	12"	28"		784	0.229"
						MUA	12"	28"		784	0.229"
						MUA	12"	28"		784	0.229"

HOOD OPTIONS

HOOD NO.	TAG	OPTION
2	122	LEFT END STANDOFF (FINISHED) 3" WIDE 60" LONG INSULATED
		STRUCTURAL FRONT PANEL

HOOD INFORMATION

HOOD NO.	TAG	FILTER(S) TYPE	QTY.	HEIGHT	LENGTH	LIGHT(S) QTY.	TYPE	WIRE GUARD	FIRE SYSTEM PIPING	HOOD HANGING WGHT
1	109					0	RECESSED		NO	346 LBS
2	122	CAPTRATE SOLO FILTER	9	20"	16"	4		NO	YES	744 LBS

HOOD INFORMATION

HOOD NO.	TAG	MODEL	LENGTH	MAX. COOKING TEMP.	EXHAUST PLENUM TOTAL EXH. CFM	RISER(S) WIDTH	LENG.	DIA.	CFM	S.P.	TOTAL SUPPLY CFM	HOOD CONSTRUCTION	HOOD CONFIG. END TO END	ROW
1	109	4224 VHB-G	3' 6.00"	700 Deg.	525	9"	9"		525	-0.068"	0	304 SS 100%	ALONE	ALONE
2	122	6024 ND-2-PSP-F	13' 2.00"	600 Deg.	3621	10"	17"		1810	-0.677"	2352	304 SS 100%	ALONE	ALONE
						10"	17"		1810	-0.677"				

KITCHEN FAN SCHEDULE

MARK	SELECTION BASED ON: MAKE	MODEL NO.	TYPE	EXT. STATIC PRESSURE	CFM	HP	VOLT/ø/HZ	RPM	DRIVE	CONTROL	WEIGHT	SONES	SERVICE AREA	WALL OPENING	EMER. POWER	REMARKS
KEF-1	GREENHECK	CUBE 180-15	UPBLAST CENTRIFUGAL	1.0	3621	1-1/2	208/3/60	1725	BELT	–	197	18.4	CAMPTON KITCHEN	–	NO	1, 2, 3
KSF-1	GREENHECK	MSX-109-H12	CENTRIFUGAL	0.5	2352	1-1/2	208/3/60	1725	BELT	–	528	23	CAMPTON KITCHEN	–	NO	1, 2, 3
KSF-2	GREENHECK	SQ 95	IN-LINE	0.2	800	1/8	120/1/60	1550	DIRECT	–	41	23	CAMPTON KITCHEN	–	NO	1, 2, 3
KEF-2	GREENHECK	SQ 90	IN-LINE	0.4	579	1/10	120/1/60	1550	DIRECT	–	41	23	CAMPTON KITCHEN PREP.	–	NO	1, 2, 3

SPECIFIC FAN NOTES: (APPLIES TO INDIVIDUAL FANS) 1. PROVIDE WALL SWITCH. 2. PROVIDE WIRE GUARD - MOTOR SIDE. 3. PROVIDE SIDE DISCHARGE CURB.

ASHRAE STANDARD 62.1-2004 OUTSIDE AIR CALCULATION

$$Voz=[(Rp \times Pz)+(Ra \times Az)]/Ez$$

VENTILATION ZONE	UNIT #	Rp OUTDOOR AIR RATE PER PERSON	Pz QUANTITY AIR RATE PEOPLE	Vbzp VENTILATION BASED ON PEOPLE	Ra OUTDOOR AIR RATE BASED ON AREA	Az AREA	Vbza VENTILATION BASED ON AREA	Vbz TOTAL VENTILATION RATE	Ez ZONE AIR DISTRIBUTION EFF	Voz ZONE O/A=Vbz/Ez	PROVIDED CFM
BAR/COFFEE & SEAT LOUNGE (A/2)	AHU-5	7.5	22	165	0.18	1993	358.74	523.74	1	523.74	525
GYM	AHU-C	0	6	0	0.3	335	106.5	106.5	1	106.5	110
KITCHEN	RTU-1	7.5	4	30	0.12	250	106.5	106.5	1	106.5	300
FRONT OFFICE	AHU-E	5	1	5	0.06	160	10	15	1	15	15

MECHANICAL SCHEDULES

SCALE: NTS

STEVEN FELLER P.E., P.A.
FLORIDA P.E. Reg. # 22848
Certificate of Authorization # 9
500 N.E. THIRD AVENUE
FORT LAUDERDALE, FLORIDA 33304
PH: 954.467.1402 FAX: 954.467.5752
e-mail: fellerpe@fellerpe.com
JOB # 13153

SEP 04 2014

STATE OF FLORIDA PROFESSIONAL ENGINEER STEVEN FELLER No. 22848

APPROVED FIRE DEPARTMENT MIAMI BEACH

MTCI PRIVATE PROVIDER SERVICES, LLC
Construction Plans Review, Inspections, Testing & Consulting

	REVIEWER INITIALS	DATE REVIEWED
BUILDING		
STRUCTURAL		
MECHANICAL		11/14/14
ELECTRICAL		
PLUMBING		
SITE CIVIL		

100% CONSTRUCTION DOCUMENT SET

NORTH SEAL

Jonathan Cardello
Lic. # AR93391

ADD Inc
Architecture Interiors Planning
One Biscayne Tower
Suite 1670
Two South
Biscayne Boulevard
Miami, Fl 33131
T. 305.482.8700
F. 305.482.8770
www.addinc.com
Lic. # AA26001507
Boston Miami

JOB NUMBER: 13036.00
CHECKED BY:
ISSUE DATE: MARCH 14, 2014
SCALE: AS NOTED

SHEET TITLE

MECHANICAL SCHEDULES

SHEET NUMBER

M5.02

COPYRIGHT ADD INC 2011

File: E:\Haddon Hall\M_Shelter JZ Mechanical\M5.02 Schedules.dwg | Layout: M5.02
User: cardellojo | Plot Scale: 1.0000 | Plot Date: September 4, 2014 10:16:02 AM

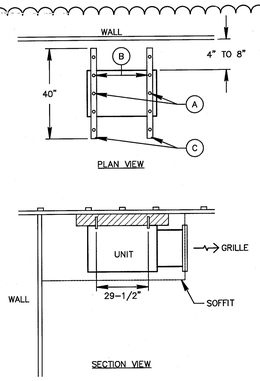

NOTES –

A.) DENOTES #8x2-1/2" LONG WOOD SCREWS – HEX HEAD SCREWS WILL BE USED TO ATTACH 2" SLOTTED UNISTRUT PIECES OF 40" LENGTH EACH TO EXISTING WOOD TRUSSES PM 16" CL TO CL.

B.) DENOTES 3/8" ALL THREAD ROD PIECES TO ANCHOR DAIKIN UNIT TO STEEL STRUT PIECES THRU FACTORY HOLES 29-1/2" APART. DAIKIN UNIT WILL BE HELD WITH 1/4" THICK RUBBER GROMMET AS ISOLATORS.

C.) 40" LONG STRUT PIECE.

MINI-SPLIT FSN COIL ANCHORING DETAIL

N.T.S.

2 2

ABBREVIATIONS

AFF	ABOVE FINISHED FLOOR
BDD	BACK DRAFT DAMPER
BTU	BRITISH THERMAL UNIT
CFM	CUBIC FEET PER MINUTE
CG	CEILING GRILLE
CR	CEILING REGISTER
DB	DRY BULB
DN	DOWN
DR	DROP
EAT	ENTERING AIR TEMPERATURE
EF	EXHAUST FAN
EWT	ENTERING WATER TEMPERATURE
FD	FUSIBLE LINK FIRE DAMPER W/ DUCT ACCESS DOOR
FLA	FULL LOAD AMPS
GPM	GALLONS PER MINUTE
HP	HORSE POWER
KW	KILOWATT
LAT	LEAVING AIR TEMPERATURE
LRA	LOCK ROTOR AMPS
LWT	LEAVING WATER TEMPERATURE
MAT	MIXED AIR TEMPERATURE
MBH	THOUSAND BTU PER HOUR
MIN	MINIMUM
NFA	NET FREE AREA
NIC	NOT IN THIS CONTRACT
NTS	NOT TO SCALE
OAI	OUTSIDE AIR INTAKE
PSI (G)	POUNDS PER SQUARE INCH (GAUGE)
RA	RETURN AIR
RPM	REVOLUTIONS PER MINUTE
SMK	SMOKE EXHAUST
TRG	TRANSFER GRILLE
VD	VOLUME DAMPER
WB	WET BULB
WMS	WIRE MESH SCREEN
(300)	300 CUBIC FEET OF AIR PER MINUTE

PIPING LEGEND:

R	REFRIGERANT LINE
	ARROW INDICATES DIRECTION OF FLOW
U	ELBOW TURNED UP
D	ELBOW TURNED DOWN

DUCTWORK LEGEND:

	SUPPLY DUCT UP
	SUPPLY DUCT DOWN
	RETURN OR EXHAUST DUCT UP
	RETURN OR EXHAUST DUCT DOWN
18x12	DUCT SIZE (CLEAR INSIDE DIMENSION) FIRST FIGURE INDICATES PLAN SIZE
18Ø	ROUND DUCT DIAMETER SIZE
	FLEXIBLE CONNECTION
VD	VOLUME DAMPER
	ELBOW WITH TURNING VANES
	RECTANGULAR DUCT CAPPED & SEALED W/ VOLUME DAMPER
	NEW DUCTWORK
	EXISTING DUCTWORK TO REMAIN
	EXISTING DUCTWORK TO BE REMOVED
	CEILING DIFFUSER (4-WAY)
	CEILING DIFFUSER (3-WAY)
	CEILING DIFFUSER (2-WAY)
	CEILING DIFFUSER (1-WAY)
	RETURN REGEISTER OR GRILLE
T.G.	TRANSFER GRILLE ON BOTH SIDES OF PARTITION WALL
	SUPPLY REGISTER
	RETURN REGISTER OR GRILLE
	LOUVER DOOR (SQUARE FEET)
	UNDERCUT DOOR
EF-1	EQUIPMENT SYMBOL AND NUMBER
M	MOTORIZED DAMPER WITH AIRFOIL BLADES AND OBD
	FIRE DAMPER W/ ACCES PANEL
FS	AUTOMATIC COMBINATION FIRE SMOKE DAMPER WITH AIRFOIL BLADES AND OBD. RUSKIN FSD-60.
MVD	MANUAL VOLUME DAMPER
T	PROVIDE DIGITAL PROGRAMMABLE THERMOSTAT FOR ALL HP IN APARTMENTS AND COMMERCIAL HEAT PUMPS. LOCKING COVER TO BE PROVIDED FOR ALL COMMERCIAL HEAT PUMP UNITS.

NOTE: ALL SYMBOLS MAY NOT NECESSARILY APPLY TO THESE PLANS

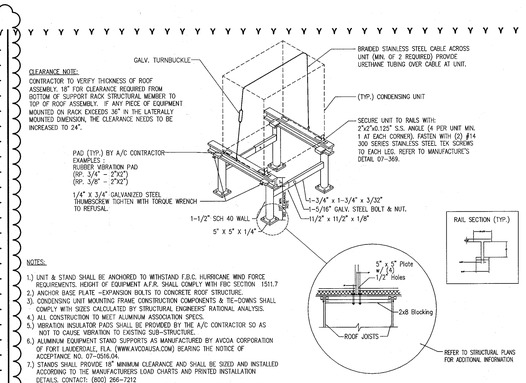

CLEARANCE NOTE:
CONTRACTOR TO VERIFY THICKNESS OF ROOF ASSEMBLY. 18" FOR CLEARANCE REQUIRED FROM BOTTOM OF SUPPORT RACK STRUCTURAL MEMBER TO TOP OF ROOF ASSEMBLY. IF ANY PIECE OF EQUIPMENT MOUNTED ON RACK EXCEEDS 36" IN THE LATERALLY MOUNTED DIMENSION, THE CLEARANCE NEEDS TO BE INCREASED TO 24".

NOTES:

1.) UNIT & STAND SHALL BE ANCHORED TO WITHSTAND F.B.C. HURRICANE WIND FORCE REQUIREMENTS. HEIGHT OF EQUIPMENT A.F.R. SHALL COMPLY WITH FBC SECTION 1511.7
2.) ANCHOR BASE PLATE -EXPANSION BOLTS TO CONCRETE ROOF STRUCTURE.
3). CONDENSING UNIT MOUNTING FRAME CONSTRUCTION COMPONENTS & TIE-DOWNS SHALL COMPLY WITH SIZES CALCULATED BY STRUCTURAL ENGINEERS' RATIONAL ANALYSIS.
4.) ALL CONSTRUCTION TO MEET ALUMINUM ASSOCIATION SPECS.
5.) VIBRATION INSULATOR PADS SHALL BE PROVIDED BY THE A/C CONTRACTOR SO AS NOT TO CAUSE VIBRATION TO EXISTING SUB-STRUCTURE.
6.) ALUMINUM EQUIPMENT STAND SUPPORTS AS MANUFACTURED BY AVCOA CORPORATION OF FORT LAUDERDALE, FLA. (WWW.AVCOAUSA.COM) BEARING THE NOTICE OF ACCEPTANCE NO. 07-0516.04.
7.) STANDS SHALL PROVIDE 18" MINIMUM CLEARANCE AND SHALL BE SIZED AND INSTALLED ACCORDING TO THE MANUFACTURERS LOAD CHARTS AND PRINTED INSTALLATION DETAILS. CONTACT: (800) 266-7212
8.) PROVIDE PRODUCT SUBMITTALS TO ENGINEER FOR APPROVAL PRIOR TO INSTALLATION.

CONDENSING UNIT SUPPORT DETAIL

N.T.S.

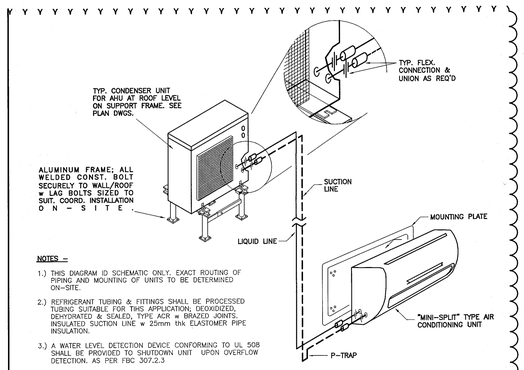

NOTES –

1.) THIS DIAGRAM IS SCHEMATIC ONLY. EXACT ROUTING OF PIPING AND MOUNTING OF UNITS TO BE DETERMINED ON-SITE.

2.) REFRIGERANT TUBING & FITTINGS SHALL BE PROCESSED TUBING SUITABLE FOR THIS APPLICATION; DEOXIDIZED, DEHYDRATED & SEALED, TYPE ACR w BRAZED JOINTS. INSULATED SUCTION LINE w 25mm thk ELASTOMER PIPE INSULATION.

3.) A WATER LEVEL DETECTION DEVICE CONFORMING TO UL 508 SHALL BE PROVIDED TO SHUTDOWN UNIT UPON OVERFLOW DETECTION. AS PER FBC 307.2.3

MINI-SPLIT HANGING/SUPPORT DETAIL

N.T.S.

2

HADDON HALL
1500 COLLINS AVE

MIAMI BEACH, FL

KEYPLAN *N.T.S.

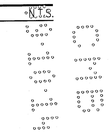

REVISIONS

NO.	DESCRIPTION	ISSUE DATE
1	PROGRESS 100% CD SET	02-18-14
2	PERMIT REVIEW COMMENTS	03-14-14
3	COORDINATION REVISION	03-14-14
2	FIRE & MTCI COMMENTS	08-21-14

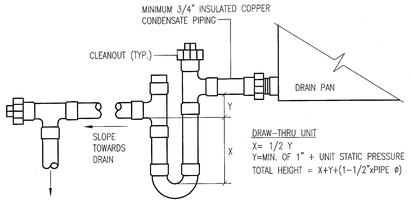

DRAW-THRU UNIT
X= 1/2 Y
Y=MIN. OF 1" + UNIT STATIC PRESSURE
TOTAL HEIGHT = X+Y+(1-1/2"xPIPE Ø)

CONDENSATE DRAIN TRAP DETAIL

N.T.S.

3

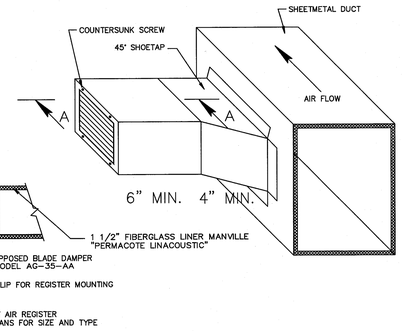

SECTION A-A
N.T.S.

SIDE REGISTER DETAIL

NTS

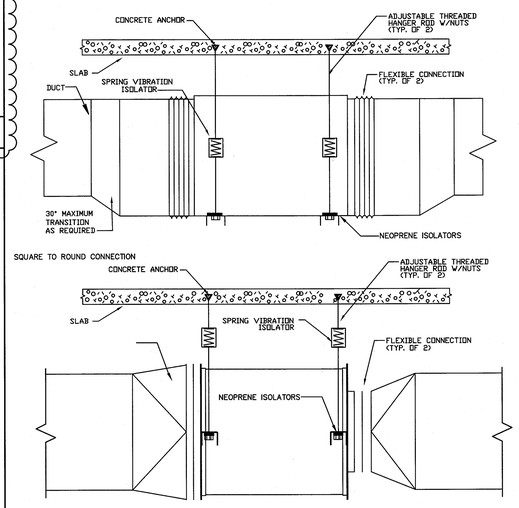

INLINE FAN DETAIL

N.T.S.

ALL INLINE FANS MOUNTED ABOVE FINISHED CEILINGS SHALL BE PROVIDED WITH MOTORS MOUNTED ON THE SIDE OF THE FAN (POSITIONS 3 & 9) UNLESS NOTED OTHERWISE ON FLOOR PLANS. ACCESS PANELS SHALL BE PROVIDED IN FINISHED CEILING LARGE ENOUGH TO ACCESS FAN FOR MAINTENANCE AND REMOVAL IF REQUIRED. COORDINATE PANEL TYPE WITH ARCH./INTERIOR DESIGNER. WHENEVER POSSIBLE FAN SHALL BE MOUNTED A MAX. OF 12" ABOVE FINISHED CEILING FOR EASE OF ACCESSIBILITY.

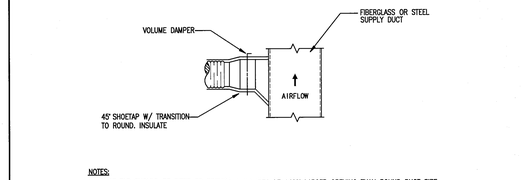

NOTES:
1. SHOE TAP SHOULD BE SIZED TO PROVIDE A MINIMUM OF 140% LARGER OPENING THAN ROUND DUCT SIZE.

TYPICAL FLEX. DUCT CONNECTION DETAIL

N.T.S.

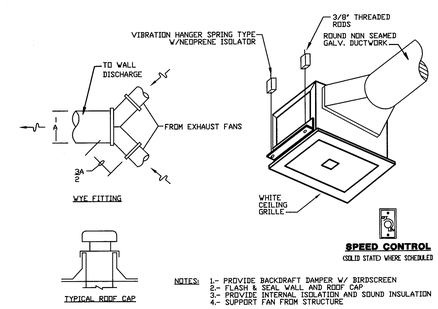

NOTES:
1.- PROVIDE BACKDRAFT DAMPER W/ BIRDSCREEN
2.- FLASH & SEAL WALL AND ROOF CAP
3.- PROVIDE INTERNAL ISOLATION AND SOUND INSULATION
4.- SUPPORT FAN FROM STRUCTURE

CEILING MOUNTED FAN DETAIL

N.T.S.

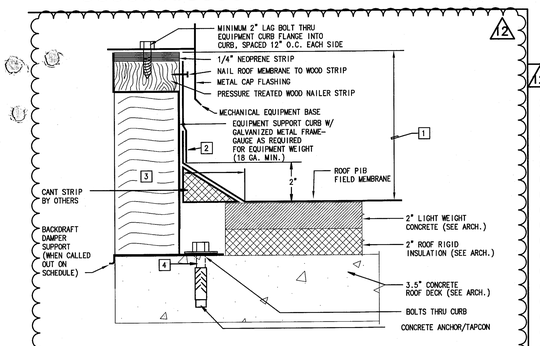

1 ROOF CURB SHALL BE MIN. 12" ABOVE FINISHED ROOF IF NOT OTHERWISE SPECIFIED ON PLANS.
2 REINFORCED PIB FLASHING APPLIED WITH CONTACT ADHESIVE-START 4" ABOVE ROOF DECK.
3 1-1/2" DENSITY ACOUSTICAL INSULATION WITH NEOPRENE COATING ON ALL EXPOSED SURFACES.
4 FOR FAN ROOFCURB, PROVIDE 1 1/4"X1/4" TAPCON SECURED THRU CURB FLANGE TO ROOF DECK, TYP. EACH SIDE. FOR LARGER CURBS PROVIDE ANCHORING AT 18" O.C. OR AS RECOMMENDED BY REGISTERED PROFESSIONAL STRUCTURAL ENGINEER FOR A/C UNIT ROOFCURB, PROVIDE 3/8"X2-3/4" "RED HEAD" WEDGE TYPE ANCHOR WITH MIN. EMBEDMENT AS RECOMMENDED BY MANUFACTURER. FOR LARGER CURBS PROVIDE ANCHORING AT 18" O.C. OR AS RECOMMENDED BY STRUCTURAL ENGINEER.

EQUIPMENT SUPPORT CURB DETAIL

N.T.S.

2

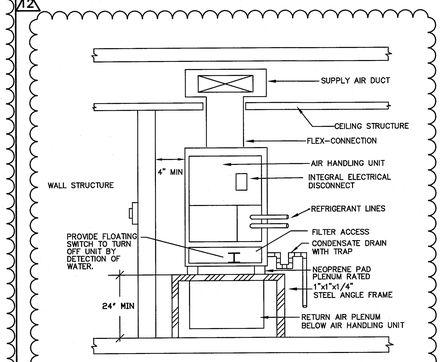

TYPICAL VERTICAL AIR UNIT DETAIL

N.T.S. M\AHU-VERT

ROOF EQUIPMENT SUPPORT STRUCTURES & TIE-DOWNS HAVE BEEN DESIGNED AND COMPLY W/REQUIREMENTS OF THE FLORIDA BLDG. CODE SEE STRUCTURAL FOR CALCULATIONS.

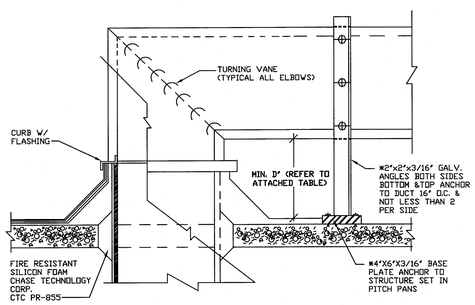

GENERAL NOTE

ALL NUTS, BOLTS, AND SCREWS EXPOSED TO WEATHER SHALL BE STAINLESS STEEL OR CADIUM PLATED

TABLE 1522.3 (FLORIDA BLDG. CODE)
ROOF MOUNTED EQUIPMENT HEIGHT REQUIREMENTS

WIDTH OF EQUIPMENT (in.)	HEIGHT OF LEGS ("D") (in.)
Up to 24	14
25 to 36	18
37 to 48	24
49 to 60	30
61 and wider	48

DIMENSIONS INDICATED ARE MINIMUM REQUIRED BY THE F.B.C. DUCTS SHALL BE MOUNTED TO COMPLY WITH CODE MINIMUM REUIREMENT UNLESS OTHERWISE NOTED ON FLOOR PLAN.

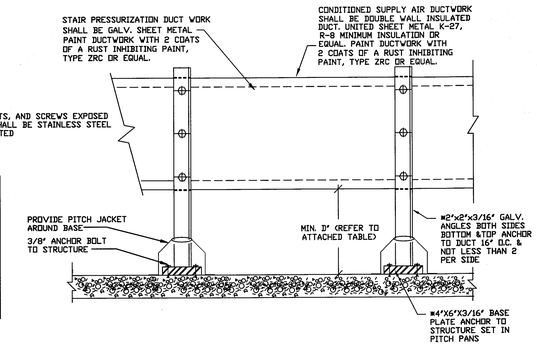

ROOF MOUNTED DUCT SUPPORT & PENETRATION DETAILS

N.T.S.

* VERIFY SIZES WITH STRUCTURAL ENGINEER

MTCI
PRIVATE PROVIDER SERVICES, LLC
Construction Plans Review, Inspections, Testing & Contracting

	REVIEWER INITIALS	DATE REVIEWED
BUILDING		
STRUCTURAL		
MECHANICAL		11/10/14
ELECTRICAL		
PLUMBING		
SITE CIVIL		

100% CONSTRUCTION DOCUMENT SET

NORTH SEAL

Jonathan Cardello
Lic. # AR93391

ADD Inc Architecture Interiors Planning

One Biscayne Tower
Suite 1670
Two South
Biscayne Boulevard
Miami, Fl 33131
T. 305.482.8700
F. 305.482.8770
www.addinc.com
Lic. # AA26001507

Boston Miami

JOB NUMBER:	13036.00
CHECKED BY:	
ISSUE DATE:	MARCH 14, 2014
SCALE:	AS NOTED

SHEET TITLE

MECHANICAL DETAILS

SEP 04 2014

STEVEN M. FELLER LICENSE No 22046 STATE OF FLORIDA PROFESSIONAL ENGINEER

APPROVED MIAMI BEACH FIRE DEPARTMENT

STEVEN FELLER P.E., P.L.
FLORIDA P.E. Reg. # 22046
Certificate of Authorization # 00003427
500 N.E. THIRD AVENUE
FORT LAUDERDALE, FLORIDA 33301
PH: 954.467.1402 FAX: 954.467.5752
e-mail: fellerpe@fellerpe.com
JOB # 13153

SHEET NUMBER

M6.01

COPYRIGHT ADD INC 2011

MECHANICAL DETAILS
SCALE: NTS

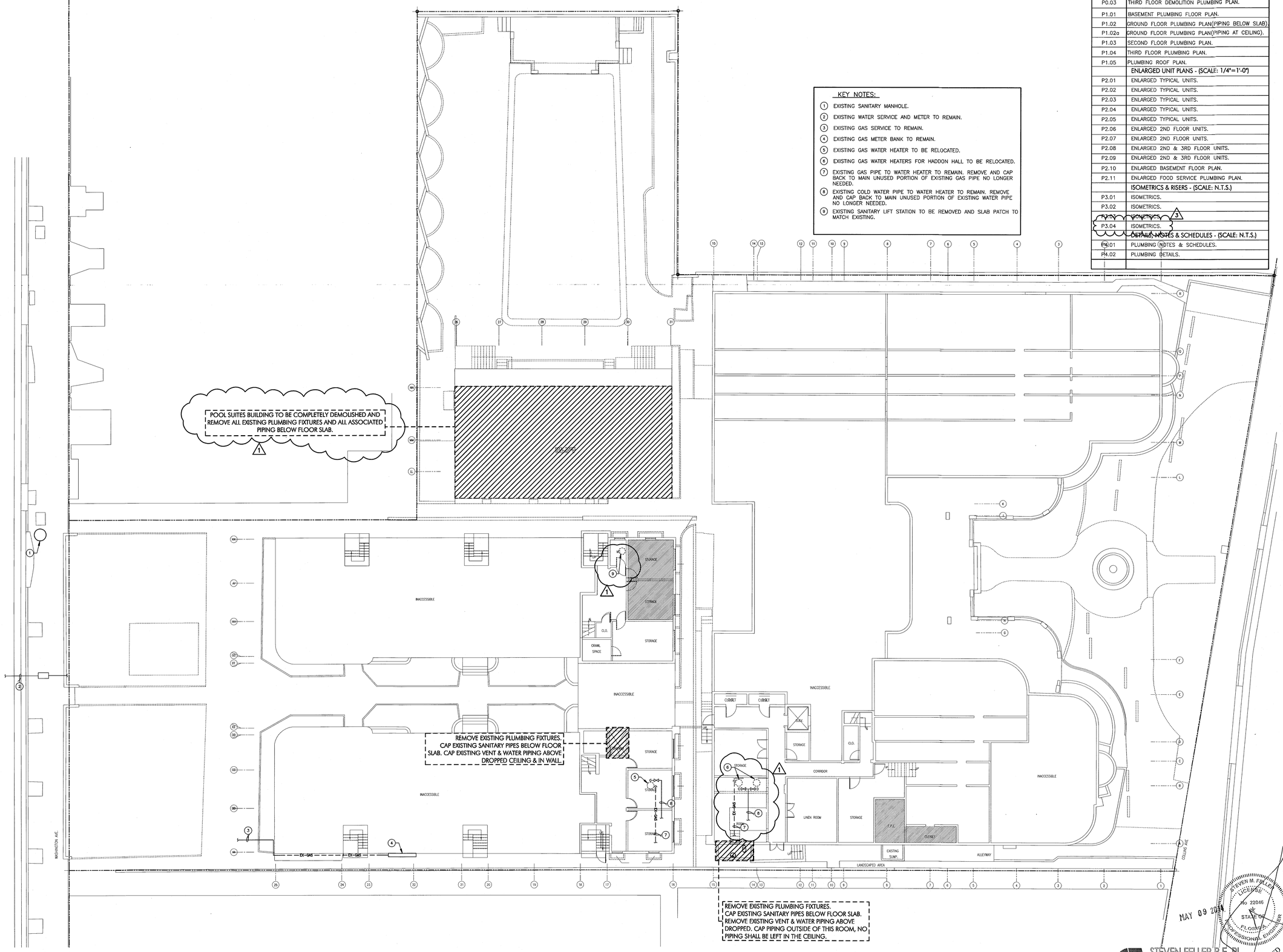

BASEMENT DEMOLITION PLUMBING FLOOR PLAN

SCALE: 3/32"=1'-0"

KEY NOTES:

1. EXISTING SANITARY MANHOLE.
2. EXISTING WATER SERVICE AND METER TO REMAIN.
3. EXISTING GAS SERVICE TO REMAIN.
4. EXISTING GAS METER BANK TO REMAIN.
5. EXISTING GAS WATER HEATER TO BE RELOCATED.
6. EXISTING GAS WATER HEATERS FOR HADDON HALL TO BE RELOCATED.
7. EXISTING GAS PIPE TO WATER HEATER TO REMAIN. REMOVE AND CAP BACK TO MAIN UNUSED PORTION OF EXISTING GAS PIPE NO LONGER NEEDED.
8. EXISTING COLD WATER PIPE TO WATER HEATER TO REMAIN. REMOVE AND CAP BACK TO MAIN UNUSED PORTION OF EXISTING WATER PIPE NO LONGER NEEDED.
9. EXISTING SANITARY LIFT STATION TO BE REMOVED AND SLAB PATCH TO MATCH EXISTING.

PLUMBING DRAWING INDEX

DWG. No.	DRAWING DESCRIPTION
	FLOOR PLANS - (SCALE: 3/32"=1'-0")
P0.00	BASEMENT DEMOLITION PLUMBING FLOOR PLAN.
P0.01	GROUND FLOOR DEMOLITION PLUMBING PLAN.
P0.02	SECOND FLOOR DEMOLITION PLUMBING PLAN.
P0.03	THIRD FLOOR DEMOLITION PLUMBING PLAN.
P1.01	BASEMENT PLUMBING FLOOR PLAN.
P1.02	GROUND FLOOR PLUMBING PLAN(PIPING BELOW SLAB).
P1.02a	GROUND FLOOR PLUMBING PLAN(PIPING AT CEILING).
P1.03	SECOND FLOOR PLUMBING PLAN.
P1.04	THIRD FLOOR PLUMBING PLAN.
P1.05	PLUMBING ROOF PLAN.
	ENLARGED UNIT PLANS - (SCALE: 1/4"=1'-0")
P2.01	ENLARGED TYPICAL UNITS.
P2.02	ENLARGED TYPICAL UNITS.
P2.03	ENLARGED TYPICAL UNITS.
P2.04	ENLARGED TYPICAL UNITS.
P2.05	ENLARGED TYPICAL UNITS.
P2.06	ENLARGED 2ND FLOOR UNITS.
P2.07	ENLARGED 2ND FLOOR UNITS.
P2.08	ENLARGED 2ND & 3RD FLOOR UNITS.
P2.09	ENLARGED 2ND & 3RD FLOOR UNITS.
P2.10	ENLARGED BASEMENT FLOOR PLAN.
P2.11	ENLARGED FOOD SERVICE PLUMBING PLAN.
	ISOMETRICS & RISERS - (SCALE: N.T.S.)
P3.01	ISOMETRICS.
P3.02	ISOMETRICS.
P3.03	ISOMETRICS. 3
P3.04	ISOMETRICS.
	DETAILS, NOTES & SCHEDULES - (SCALE: N.T.S.)
P4.01	PLUMBING NOTES & SCHEDULES.
P4.02	PLUMBING DETAILS.

HADDON HALL
1500 COLLINS AVE

MIAMI BEACH, FL

KEYPLAN N.T.S.

REVISIONS

NO.	DESCRIPTION	ISSUE DATE
1	PROGRESS TO 100% CD SET	02/07/2014
3	COORDINATION REVISION	03/25/14

MTCI
PRIVATE PROVIDER SERVICES, LLC
Building Plans Review, Inspections, Permitting & Consulting

	REVIEWER INITIALS	DATE REVIEWED
BUILDING		
STRUCTURAL		
MECHANICAL		
ELECTRICAL		
PLUMBING	DJ	4/10/14
SITE CIVIL		

100% CONSTRUCTION DOCUMENT SET

NORTH SEAL

Jonathan Cardello
Lic. # AR93391

ADD Inc Architecture Interiors Planning

One Biscayne Tower
Suite 1670
Two South
Biscayne Boulevard
Miami, Fl 33131
T. 305.482.8700
F. 305.482.8770
www.addinc.com
Lic. # AA26001507

Boston Miami

JOB NUMBER: 13036.00
CHECKED BY:
ISSUE DATE: MARCH 14, 2014
SCALE: AS NOTED

SHEET TITLE

BASEMENT DEMOLITION PLAN

SHEET NUMBER

P0.00

COPYRIGHT ADD INC 2011

MAY 09 2014
STEVEN M. FELLER LICENSE NO 22046 STATE OF FLORIDA PROFESSIONAL ENGINEER

APPROVED MIAMI BEACH FIRE DEPARTMENT

STEVEN FELLER P.E., P.L.
FLORIDA P.E. Reg. # 22046
Certificate of Authorization # 00003427
500 N.E. THIRD AVENUE
FORT LAUDERDALE, FLORIDA 33301
PH: 954.467.1402 FAX: 954.467.5752
e-mail: fellerpe@fellerpe.com
JOB # 13153

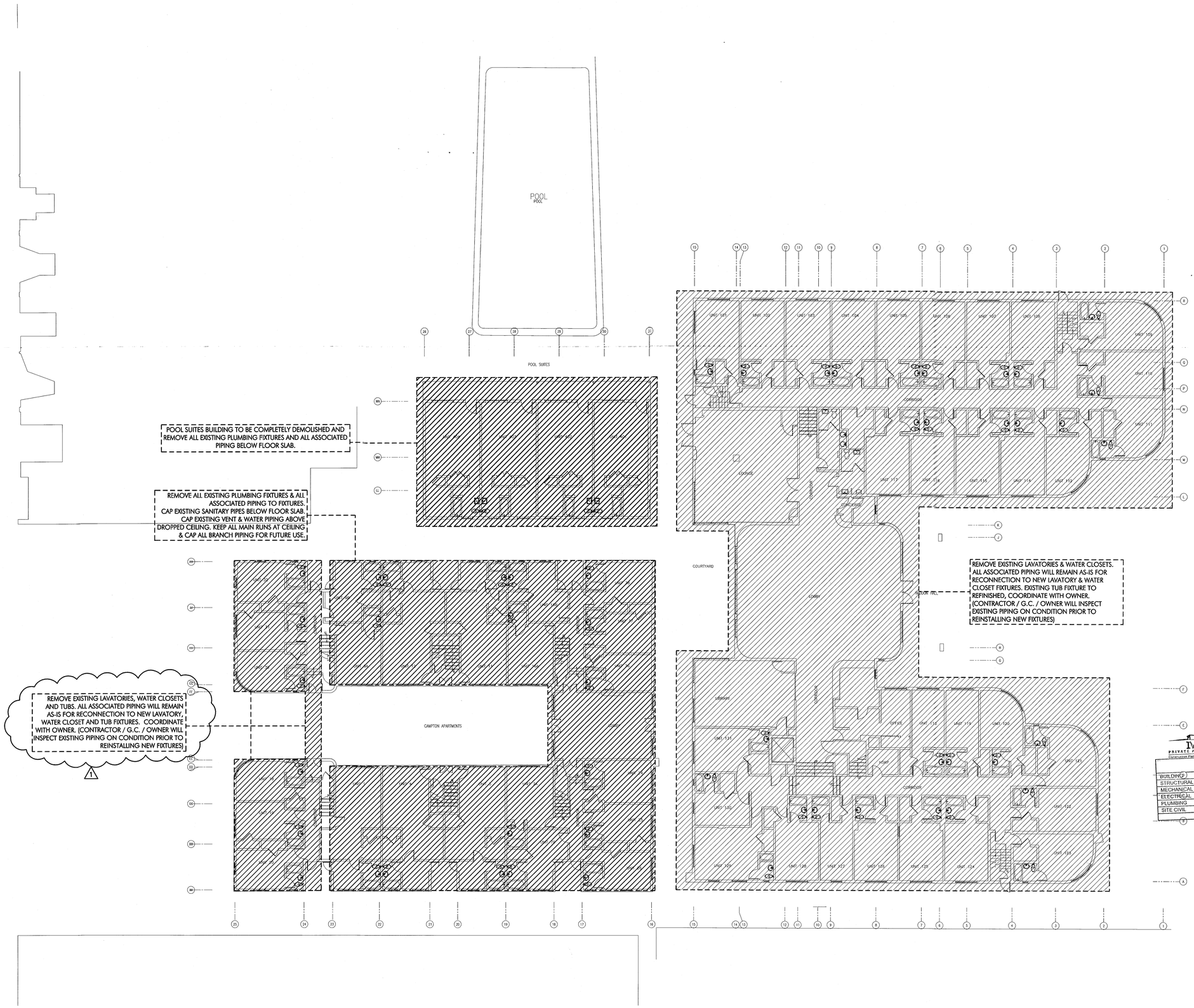

GROUND FLOOR DEMOLITION PLUMBING PLAN

SCALE: 3/32"=1'-0"

HADDON HALL
1500 COLLINS AVE

MIAMI BEACH, FL

KEYPLAN N.T.S.

REVISIONS

NO.	DESCRIPTION	ISSUE DATE
1	PROGRESS TO 100% CD SET	02/07/2014

100% CONSTRUCTION DOCUMENT SET

NORTH

SEAL

Jonathan Cardello
Lic. # AR93391

ADD Inc
Architecture Interiors Planning

One Biscayne Tower
Suite 1670
Two South
Biscayne Boulevard
Miami, Fl 33131
T. 305.482.8700
F. 305.482.8770
www.addinc.com
Lic. # AA26001907

Boston Miami

JOB NUMBER: 13036.00

CHECKED BY:

ISSUE DATE: MARCH 14, 2014

SCALE: AS NOTED

SHEET TITLE

GROUND FLOOR DEMOLITION PLAN

SHEET NUMBER

P0.01

COPYRIGHT ADD INC 2011

MAY 09 2014

STEVEN M. FELLER LICENSE No. 22046 STATE OF FLORIDA PROFESSIONAL ENGINEER

APPROVED MIAMI BEACH FIRE DEPARTMENT

STEVEN FELLER P.E.,PL
FLORIDA P.E. Reg. # 22046
Certificate of Authorization # 000003427
500 N.E. THIRD AVENUE
FORT LAUDERDALE, FLORIDA 33301
PH: 954.467.1402 FAX: 954.467.3752
e-mail: feller@fellerpe.com
JOB # 13153

File: F:\Jobs_Hall\13153-Ground Floor Demolition.dwg Layout: Layout1
User: JCARDELLO Date/Time: Tue Nov 04 2014, 01:35:36 PM

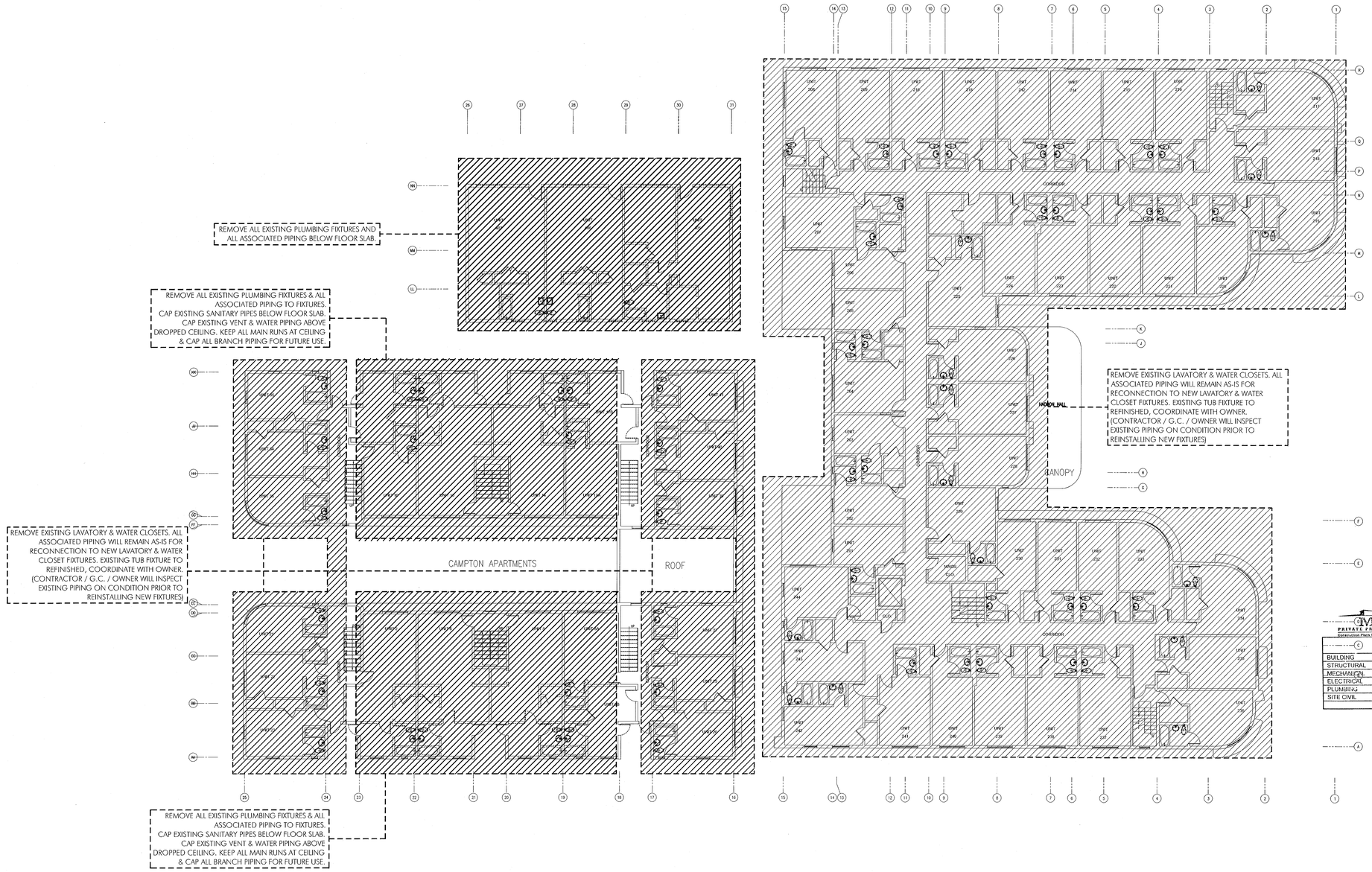

SECOND FLOOR DEMOLITION PLUMBING PLAN

SCALE: 3/32"=1'-0"

HADDON HALL
1500 COLLINS AVE

MIAMI BEACH, FL

KEYPLAN N.T.S.

REVISIONS

NO.	DESCRIPTION	ISSUE DATE

PERMIT SET

NORTH SEAL

Jonathan Cardello
Lic. # AR93391

ADD Inc Architecture Interiors Planning

One Biscayne Tower
Suite 1670
Two South
Biscayne Boulevard
Miami, Fl 33131
T. 305.482.8700
F. 305.482.8770
www.addinc.com
Lic. # AA26001507

Boston Miami

MTCI PRIVATE PROVIDER SERVICES, LLC
Construction Plans Review, Inspections, Testing & Contracting

	REVIEWER INITIALS	DATE REVIEWED
BUILDING		
STRUCTURAL		
MECHANICAL		
ELECTRICAL		
PLUMBING	DG	11/10/14
SITE CIVIL		

JOB NUMBER:	13036.00
CHECKED BY:	SF
ISSUE DATE:	JANUARY 24, 2014
SCALE:	AS NOTED

SHEET TITLE

SECOND FLOOR DEMOLITION PLAN

FEB 05 2014

STEVEN M. FELLER LICENSE No 22046 STATE OF FLORIDA PROFESSIONAL ENGINEER

APPROVED MIAMI BEACH FIRE DEPARTMENT

STEVEN FELLER P.E.,PL
FLORIDA P.E. Reg. # 22046
Certificate of Authorization # 00003427
500 N.E. THIRD AVENUE
FORT LAUDERDALE, FLORIDA 33301
Pit: 954.467.1402 FAX: 954.467.5752
e-mail: fellerpe@fellerpe.com
JOB # 13153

SHEET NUMBER

P0.02

COPYRIGHT ADD INC 2011

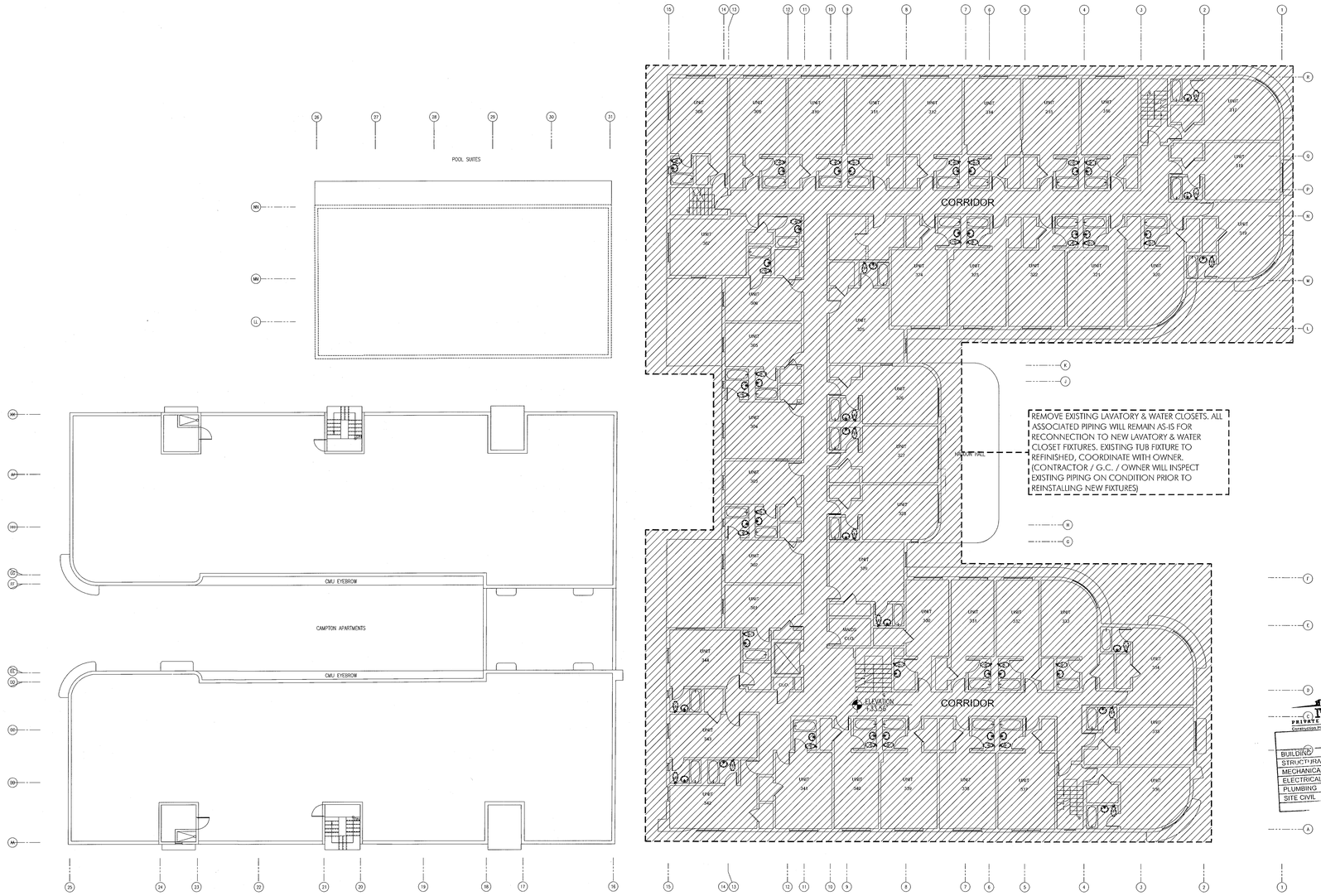

THIRD FLOOR DEMOLITION PLUMBING PLAN

SCALE: 3/32"=1'-0"

HADDON HALL
1500 COLLINS AVE

MIAMI BEACH, FL

KEYPLAN N.T.S.

REVISIONS

NO.	DESCRIPTION	ISSUE DATE

PERMIT SET

NORTH SEAL

Jonathan Cardello
Lic. # AR93391

ADD Inc Architecture Interiors Planning

One Biscayne Tower
Suite 1670
Two South
Biscayne Boulevard
Miami, Fl 33131
T. 305.482.8700
F. 305.482.8770
www.addinc.com
Lic. # AA26001507

Boston Miami

MTCI PRIVATE PROVIDER SERVICES, LLC
Construction Plans Review, Inspections, Services & Consulting

	REVIEWER INITIALS	DATE REVIEWED
BUILDING		
STRUCTURAL		
MECHANICAL		
ELECTRICAL		
PLUMBING	DG	1-30-14
SITE CIVIL		

JOB NUMBER:	13036.00
CHECKED BY:	SF
ISSUE DATE:	JANUARY 24, 2014
SCALE:	AS NOTED

SHEET TITLE

THIRD FLOOR
DEMOLITION PLAN

FEB 05 2014

STEVEN M. FELLER LICENSE No 22046 STATE OF FLORIDA PROFESSIONAL ENGINEER

APPROVED MIAMI BEACH FIRE DEPARTMENT

STEVEN FELLER P.E.,PL
FLORIDA P.E. Reg. # 22046
Certificate of Authorization # 00003427
500 N.E. THIRD AVENUE
FORT LAUDERDALE, FLORIDA 33301
PH: 954.467.1402 FAX: 954.467.5752
e-mail: fellerpe@fellerpe.com
JOB # 13153

SHEET NUMBER

P0.03

COPYRIGHT ADD INC 2011

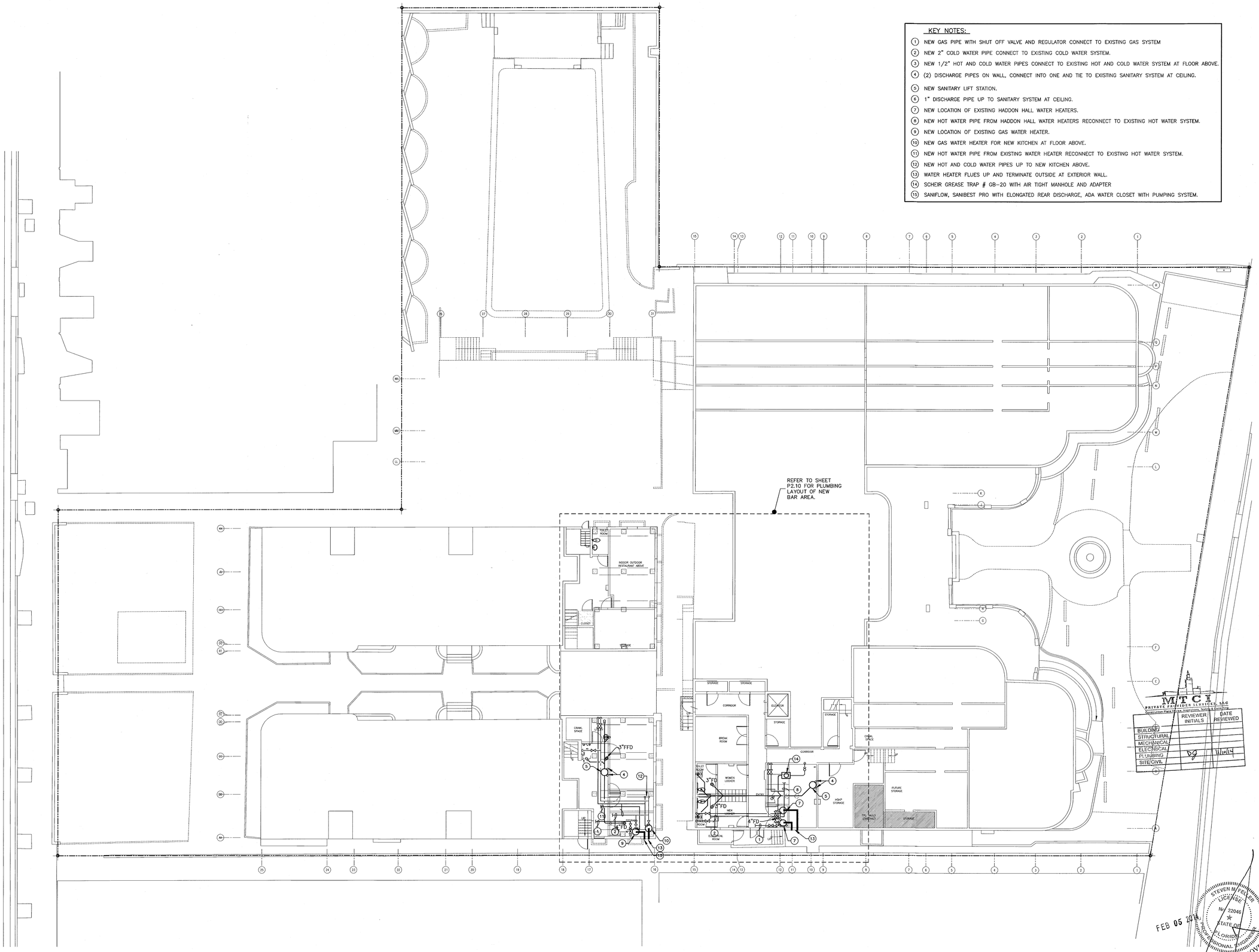

KEY NOTES:

1. NEW GAS PIPE WITH SHUT OFF VALVE AND REGULATOR CONNECT TO EXISTING GAS SYSTEM
2. NEW 2" COLD WATER PIPE CONNECT TO EXISTING COLD WATER SYSTEM.
3. NEW 1/2" HOT AND COLD WATER PIPES CONNECT TO EXISTING HOT AND COLD WATER SYSTEM AT FLOOR ABOVE.
4. (2) DISCHARGE PIPES ON WALL, CONNECT INTO ONE AND TIE TO EXISTING SANITARY SYSTEM AT CEILING.
5. NEW SANITARY LIFT STATION.
6. 1" DISCHARGE PIPE UP TO SANITARY SYSTEM AT CEILING.
7. NEW LOCATION OF EXISTING HADDON HALL WATER HEATERS.
8. NEW HOT WATER PIPE FROM HADDON HALL WATER HEATERS RECONNECT TO EXISTING HOT WATER SYSTEM.
9. NEW LOCATION OF EXISTING GAS WATER HEATER.
10. NEW GAS WATER HEATER FOR NEW KITCHEN AT FLOOR ABOVE.
11. NEW HOT WATER PIPE FROM EXISTING WATER HEATER RECONNECT TO EXISTING HOT WATER SYSTEM.
12. NEW HOT AND COLD WATER PIPES UP TO NEW KITCHEN ABOVE.
13. WATER HEATER FLUES UP AND TERMINATE OUTSIDE AT EXTERIOR WALL.
14. SCHEIR GREASE TRAP # GB-20 WITH AIR TIGHT MANHOLE AND ADAPTER
15. SANIFLOW, SANIBEST PRO WITH ELONGATED REAR DISCHARGE, ADA WATER CLOSET WITH PUMPING SYSTEM.

MITCH PRIVATE PROVIDER SERVICES, LLC	REVIEWER INITIALS	DATE REVIEWED
BUILDING		
STRUCTURAL		
MECHANICAL		
ELECTRICAL		
PLUMBING	DG	1/16/14
SITE/CIVIL		

FEB 05 2014

STEVEN M. FELLER LICENSE No. 22046 STATE OF FLORIDA PROFESSIONAL ENGINEER

APPROVED MIAMI BEACH FIRE DEPARTMENT

BASEMENT PLUMBING FLOOR PLAN

SCALE: 3/32"=1'-0"

STEVEN FELLER P.E.,P.L
FLORIDA P.E. Reg. # 22046
Certificate of Authorization # 00003427
300 N.E. THIRD AVENUE
FORT LAUDERDALE, FLORIDA 33301
PH: 954.467.1402 FAX: 954.467.3752
e-mail: feller@fellerpe.com
JOB # 13153

HADDON HALL
1500 COLLINS AVE

MIAMI BEACH, FL

KEYPLAN N.T.S.

REVISIONS

NO.	DESCRIPTION	DATE

PERMIT SET

NORTH SEAL

Jonathan Cardello
Lic. # AR93391

ADD Inc Architecture Interiors Planning

One Biscayne Tower
Suite 1670
Two South
Biscayne Boulevard
Miami, Fl 33131
T. 305.482.8700
F. 305.482.8770
www.addinc.com
Lic. # AA26001507

Boston Miami

JOB NUMBER:	13036.00
CHECKED BY:	SF
ISSUE DATE:	JANUARY 24, 2014
SCALE:	AS NOTED

SHEET TITLE

BASEMENT PLUMBING PLAN

SHEET NUMBER

P1.01

COPYRIGHT ADD INC 2011

KEY NOTES:

1. EXISTING TUB TO BE REFURNISHED, WITH NEW DRAIN, SHOWER VALVES AND HEAD. TYPICAL UNLESS OTHERWISE NOTED.
2. EXISTING LAVATORY TO BE REMOVED AND REPLACED WITH NEW LAVATORY, WITH NEW FAUCET, SUPPLY PIPES, P-TRAP AND ANGLE STOPS. TYPICAL UNLESS OTHERWISE NOTED.
3. EXISTING WATER CLOSET TO BE REMOVED AND REPLACED WITH NEW, WITH NEW SUPPLY PIPE, ANGLE STOP AND WAX RING. TYPICAL UNLESS OTHERWISE NOTED.
4. NEW BAR AREA, PROVIDE NEW FIXTURES WITH NEW SANITARY, VENT, HOT AND COLD WATER PIPING SYSTEMS. (CONNECT TO EXISTING SYSTEMS)
5. NEW UNITS BATHROOM, PROVIDE NEW FIXTURES WITH NEW SANITARY, VENT, HOT AND COLD WATER PIPING SYSTEMS. (CONNECT TO EXISTING SYSTEMS)
6. NEW UNITS BATHROOMS AND PROVIDE NEW FIXTURES WITH NEW SANITARY, VENT, HOT AND COLD WATER PIPING SYSTEMS. (CONNECT TO EXISTING SYSTEMS)
7. NEW SEATING AREA AND JUICE BAR, PROVIDE DECK DRAINS AND HOSE BIB IN SEATING AREA AND SANITARY, VENT, HOT AND COLD WATER PIPING SYSTEM IN JUICE BAR AREA.
8. NEW KITCHEN AREA, PROVIDE SANITARY, GREASE, HOT AND COLD WATER PIPING SYSTEM AND 1,250 GALLON GREASE TRAP.
9. 4" SANITARY PIPE FOR NEW BAR. REFER TO SHEET P2.10 FOR CONTINUATION.
10. REFER TO SHEET P2.11 FOR CONTINUATION.
11. NEW GAS PIPE CONNECT TO EXISTING METER.
12. ELEVATOR SUMP PIT W/PUMP.
13. NEW GAS PIPE SLEEVE THROUGH WALL AND TURN UP.
14. 4" GREASE WASTE PIPE FROM NEW KITCHEN.
15. 1,250 GALLON GREASE TRAP.
16. 3" CONDENSATE PIPE @ 1/8" / FT CONNECT TO STORMDRAIN SYSTEM. REFER TO CIVIL DWGS FOR CONTINUATION.
17. 4" SANITARY PIPE @ 1/8" / FT CONNECT TO SANITARY SYSTEM. REFER TO CIVIL DWGS FOR CONTINUATION.
18. 6" STORMDRAIN PIPE @ 1/8" / FT CONNECT TO STORMDRAIN SYSTEM. REFER TO CIVIL DWGS FOR CONTINUATION.
19. NEW GAS PIPE RUNS BELOW GRADE WITH NO JOINT IN SLEEVE.
20. NEW WATER PIPE RUNS BELOW GRADE WITH NO JOINT IN SLEEVE.
21. NEW 2" CONDENSATE RISER.
22. CONNECT NEW 3" SANITARY PIPE TO EXISTING SANITARY SYSTEM.
23. NEW GAS RISER UP FOR TANKLESS GAS WATER HEATERS.
24. NEW GAS AND COLD WATER RISERS.
25. NEW COLD WATER PIPE UP.
26. NEW GAS, HWR HOT, AND COLD WATER PIPES UP.
27. 3" FIRE SPRINKLER DRAIN RISER.
28. FROM 3" FIRE SPRINKLER DRAIN PIPE AT BASEMENT LEVEL. REFER TO SHEET P2.10 FOR CONTINUATION.

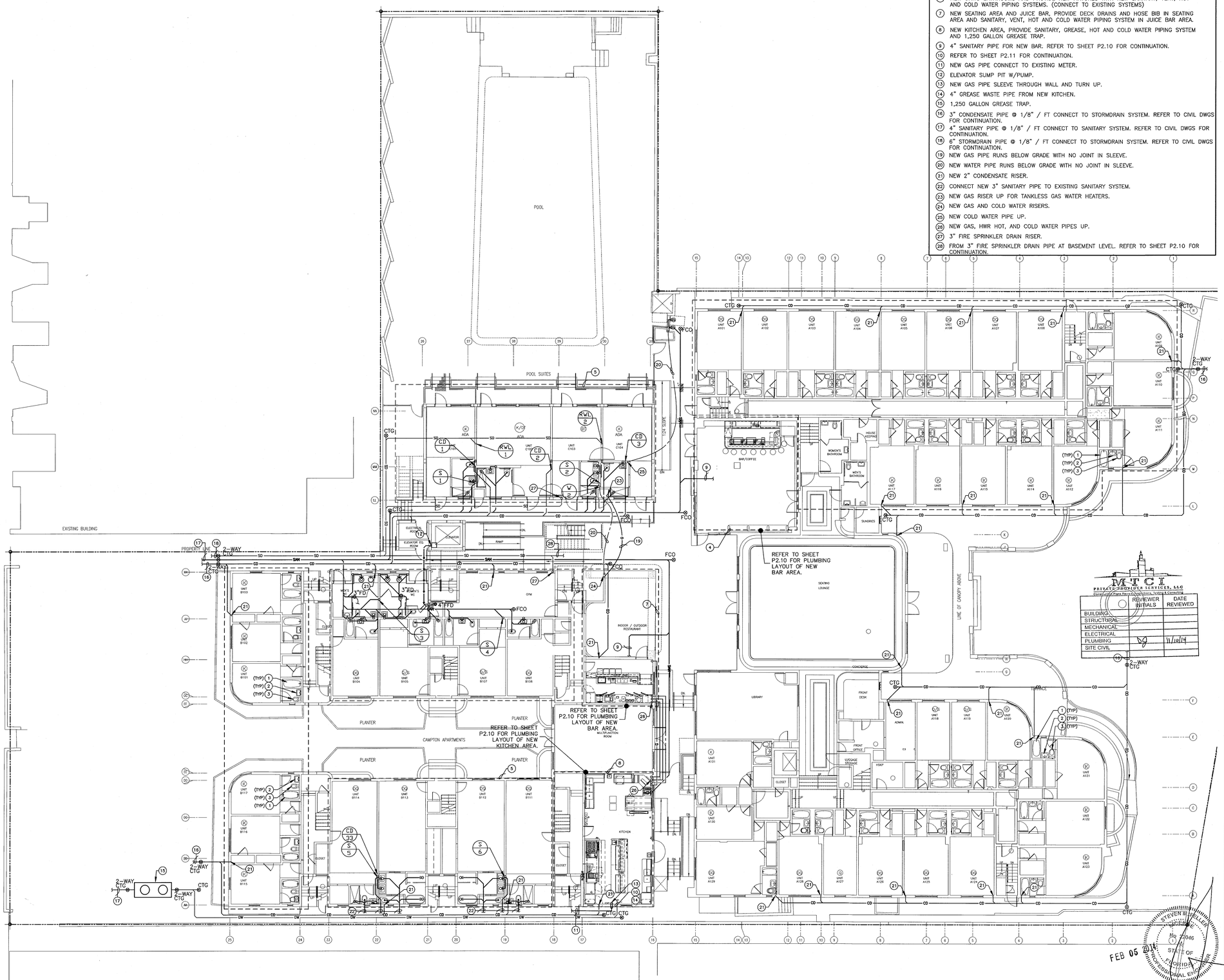

GROUND FLOOR PLUMBING PLAN

SCALE: 3/32"=1'-0"

REVIEWER INITIALS	DATE REVIEWED
BUILDING	
STRUCTURAL	
MECHANICAL	
ELECTRICAL	
PLUMBING	11/10/14
SITE CIVIL	

FEB 05 2014

APPROVED MIAMI BEACH FIRE DEPARTMENT

STEVEN FELLER P.E., PL
FLORIDA P.E. Reg. # 22046
Certificate of Authorization # 00003427
500 N.E. THIRD AVENUE
FORT LAUDERDALE, FLORIDA 33301
PH: 954.467.1402 FAX: 954.467.5732
e-mail: feller@feleorp.com
JOB # 13153

HADDON HALL
1500 COLLINS AVE

MIAMI BEACH, FL

KEYPLAN N.T.S.

REVISIONS

NO.	DESCRIPTION	ISSUE DATE

PERMIT SET

NORTH SEAL

Jonathan Cardello
Lic. # AR93391

ADD Inc Architecture Interiors Planning

One Biscayne Tower
Suite 1670
Two South
Biscayne Boulevard
Miami, Fl 33131
T. 305.482.8700
F. 305.482.8770
www.addinc.com
Lic. # AA26001507

Boston Miami

JOB NUMBER:	13036.00
CHECKED BY:	SF
ISSUE DATE:	JANUARY 24, 2014
SCALE:	AS NOTED

SHEET TITLE

GROUND FLOOR PLUMBING PLAN (PIPE BELOW SLAB)

SHEET NUMBER

P1.02

COPYRIGHT ADD INC 2011

HADDON HALL
1500 COLLINS AVE

MIAMI BEACH, FL

KEYPLAN N.T.S.

KEY NOTES:

1. EXISTING TUB TO BE REFURNISHED, WITH NEW DRAIN, SHOWER VALVES AND HEAD. TYPICAL UNLESS OTHERWISE NOTED.
2. EXISTING LAVATORY TO BE REMOVED AND REPLACED WITH NEW LAVATORY, WITH NEW FAUCET, SUPPLY PIPES, P-TRAP AND ANGLE STOPS. TYPICAL UNLESS OTHERWISE NOTED.
3. EXISTING WATER CLOSET TO BE REMOVED AND REPLACED WITH NEW, WITH NEW SUPPLY PIPE, ANGLE STOP AND WAX RING. TYPICAL UNLESS OTHERWISE NOTED.
4. NEW BAR AREA, PROVIDE NEW FIXTURES WITH NEW SANITARY, VENT, HOT AND COLD WATER PIPING SYSTEMS. (CONNECT TO EXISTING SYSTEMS)
5. NEW UNITS BATHROOM, PROVIDE NEW FIXTURES WITH NEW SANITARY, VENT, HOT AND COLD WATER PIPING SYSTEMS. (CONNECT TO EXISTING SYSTEMS)
6. NEW UNITS BATHROOMS AND PROVIDE NEW FIXTURES WITH NEW SANITARY, VENT, HOT AND COLD WATER PIPING SYSTEMS. (CONNECT TO EXISTING SYSTEMS)
7. NEW SEATING AREA AND JUICE BAR, PROVIDE DECK DRAINS AND HOSE BIB IN SEATING AREA AND SANITARY, VENT, HOT AND COLD WATER PIPING SYSTEM IN JUICE BAR AREA.
8. NEW KITCHEN AREA, PROVIDE SANITARY, GREASE, HOT AND COLD WATER PIPING SYSTEM AND 1,250 GALLON GREASE TRAP.
9. 4" SANITARY PIPE FOR NEW BAR. REFER TO SHEET P2.10 FOR CONTINUATION.
10. REFER TO SHEET P2.10 FOR CONTINUATION.
11. NEW GAS PIPE FROM EXISTING GAS METER.
12. NEW TANKLESS GAS WATER HEATER.
13. GAS RISER UP FOR TANKLESS GAS WATER HEATERS.
14. NEW 2" CONDENSATE PIPE RUNNING AT CEILING TURN DOWN.
15. NEW HOT, COLD AND HWR PIPES FROM FLOOR BELOW.
16. COLD WATER AND GAS PIPE TURN DOWN.
17. NEW 1" CONDENSATE PIPE RUNNING AT CEILING TURN DOWN.
18. GAS PIPE TURN DOWN.
19. 3" FIRE SPRINKLER DRAIN RISER.
20. 3" FIRE SPRINKLER DRAIN PIPE TURN DOWN.

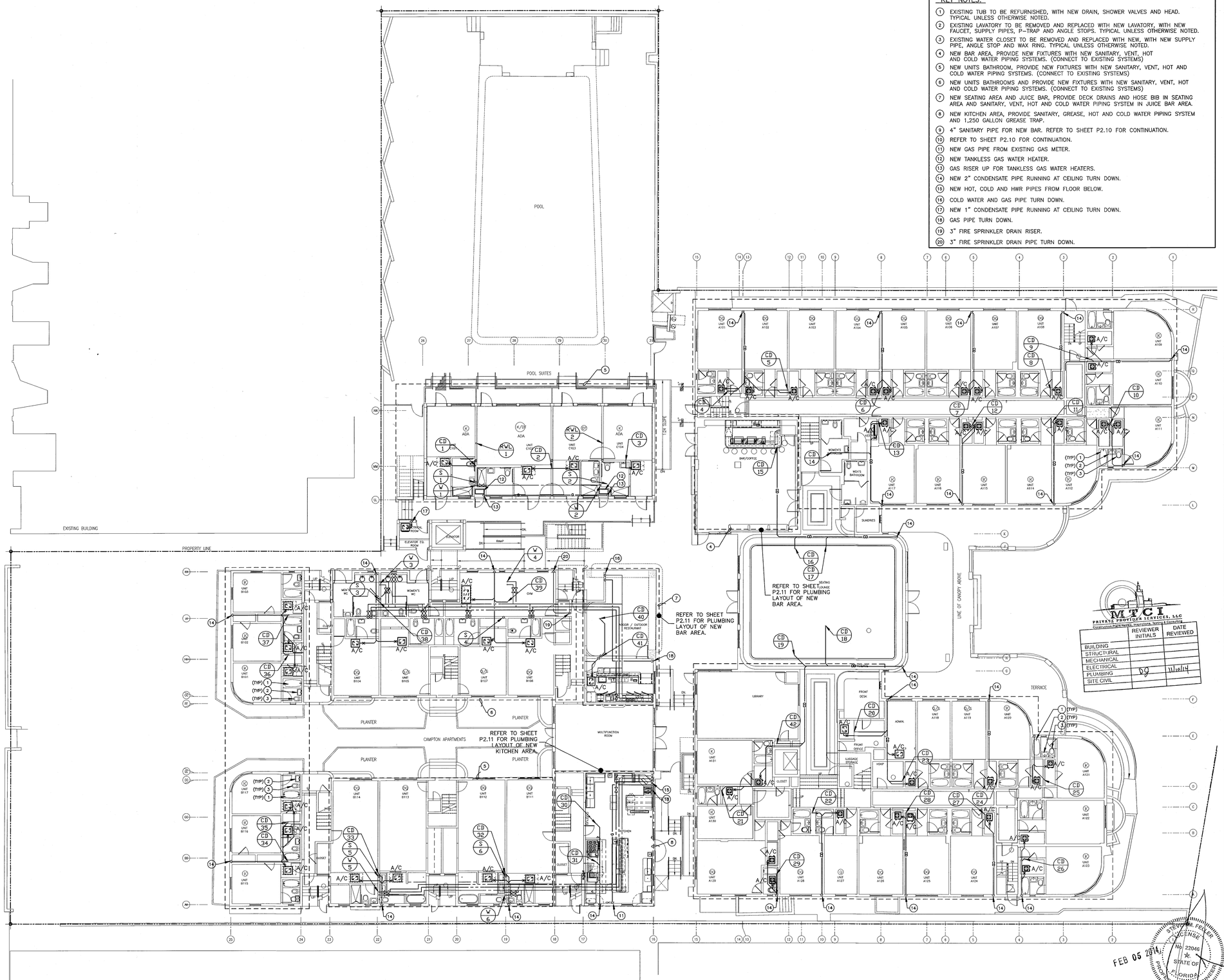

	REVIEWER INITIALS	DATE REVIEWED
BUILDING		
STRUCTURAL		
MECHANICAL		
ELECTRICAL		
PLUMBING	DG	11/06/14
SITE CIVIL		

MTCI PRIVATE PROVIDER SERVICES, LLC
Construction Plans Review, Inspections, Testing & Consulting

GROUND FLOOR PLUMBING PLAN

SCALE: 3/32"=1'-0"

STEVEN FELLER P.E., P.L.
FLORIDA P.E. Reg. # 22046
Certificate of Authorization # 00003427
500 N.E. THIRD AVENUE
FORT LAUDERDALE, FLORIDA 33301
PH: 954.467.1402 FAX: 954.467.5752
e-mail: fellerpe@fellerpe.com
JOB # 13153

STEVEN M. FELLER LICENSE No. 22046 STATE OF FLORIDA PROFESSIONAL ENGINEER

FEB 05 2014

APPROVED MIAMI BEACH FIRE DEPARTMENT

REVISIONS

NO.	DESCRIPTION	DATE

PERMIT SET

NORTH SEAL

Jonathan Cardello
Lic. # AR93391

ADD Inc Architecture Interiors Planning

One Biscayne Tower
Suite 1670
Two South
Biscayne Boulevard
Miami, Fl 33131
T. 305.482.8700
F. 305.482.8770
www.addinc.com
Lic. # AA26001507

Boston Miami

JOB NUMBER:	13036.00
CHECKED BY:	SF
ISSUE DATE:	JANUARY 24, 2014
SCALE:	AS NOTED

SHEET TITLE

GROUND FLOOR PLUMBING PLAN (PIPE AT CEILING)

SHEET NUMBER

P1.02a

COPYRIGHT ADD INC 2011

KEY NOTES:

1. EXISTING TUB TO BE REFURNISHED, WITH NEW DRAIN, SHOWER VALVES AND HEAD. TYPICAL UNLESS OTHERWISE NOTED.
2. EXISTING LAVATORY TO BE REMOVED AND REPLACED WITH NEW LAVATORY, WITH NEW FAUCET, SUPPLY PIPES, P-TRAP AND ANGLE STOPS. TYPICAL UNLESS OTHERWISE NOTED.
3. EXISTING WATER CLOSET TO BE REMOVED AND REPLACED WITH NEW, WITH NEW SUPPLY PIPE, ANGLE STOP AND WAX RING. TYPICAL UNLESS OTHERWISE NOTED.
4. NEW BAR AND BATHROOMS, PROVIDE NEW FIXTURES WITH NEW SANITARY, VENT, HOT AND COLD WATER PIPING SYSTEMS.
5. NEW UNITS BATHROOM, PROVIDE NEW FIXTURES WITH NEW SANITARY, VENT, HOT AND COLD WATER PIPING SYSTEMS. (CONNECT TO EXISTING SYSTEMS)
6. NEW TANKLESS GAS WATER HEATER.

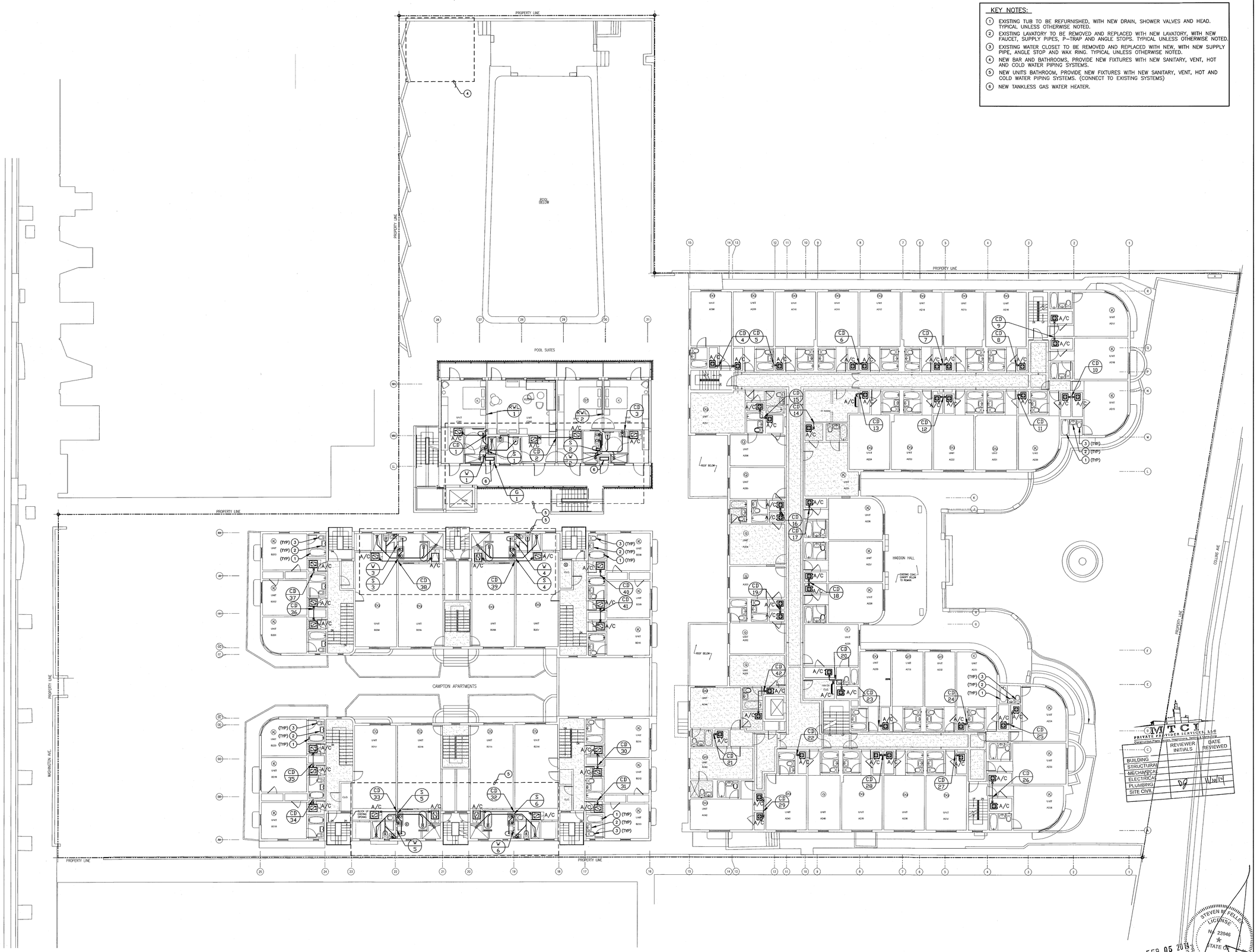

SECOND FLOOR PLUMBING PLAN

SCALE: 3/32"=1'-0"

HADDON HALL
1500 COLLINS AVE

MIAMI BEACH, FL

KEYPLAN N.T.S.

REVISIONS

NO.	DESCRIPTION	ISSUE DATE

PERMIT SET

NORTH

SEAL

Jonathan Cardello
Lic. # AR93391

ADD Inc Architecture Interiors Planning

One Biscayne Tower
Suite 1670
Two South
Biscayne Boulevard
Miami, Fl 33131
T. 305.482.8700
F. 305.482.8770
www.addinc.com
Lic. # AA26001507

Boston Miami

MTCI PRIVATE PROVIDER SERVICES, LLC

	REVIEWER INITIALS	DATE REVIEWED
BUILDING		
STRUCTURAL		
MECHANICAL		
ELECTRICAL		
PLUMBING	SF	1/16/14
SITE CIVIL		

FEB 05 2014

STEVEN M. FELLER LICENSE No. 22046 STATE OF FLORIDA PROFESSIONAL ENGINEER

APPROVED MIAMI BEACH FIRE DEPARTMENT

STEVEN FELLER P.E., PL
FLORIDA P.E. Reg. # 22046
Certificate of Authorization # 00003427
300 N.E. 3RRD AVENUE
FORT LAUDERDALE, FLORIDA 33301
PH: 954.467.1402 FAX: 954.467.5792
e-mail: fellerpe@fellerpe.com
JOB # 13153

JOB NUMBER:	13036.00
CHECKED BY:	SF
ISSUE DATE:	JANUARY 24, 2014
SCALE:	AS NOTED

SHEET TITLE

SECOND FLOOR PLUMBING PLAN

SHEET NUMBER

P1.03

COPYRIGHT ADD INC 2011

File: R:\Miami\13036 Haddon Hall\13036 - Haddon Hall.dwg
User: sfeller Date: January 4, 2014 04:26:36 PM

KEY NOTES:

1. EXISTING TUB TO BE REFURNISHED, WITH NEW DRAIN, SHOWER VALVES AND HEAD. TYPICAL UNLESS OTHERWISE NOTED.
2. EXISTING LAVATORY TO BE REMOVED AND REPLACED WITH NEW LAVATORY, WITH NEW FAUCET, SUPPLY PIPES, P-TRAP AND ANGLE STOPS. TYPICAL UNLESS OTHERWISE NOTED.
3. EXISTING WATER CLOSET TO BE REMOVED AND REPLACED WITH NEW, WITH NEW SUPPLY PIPE, ANGLE STOP AND WAX RING. TYPICAL UNLESS OTHERWISE NOTED.
4. NEW UNITS BATHROOM, PROVIDE NEW FIXTURES WITH NEW SANITARY , VENT, HOT AND COLD WATER PIPING SYSTEMS.
5. NEW TANKLESS WATER HEATER.

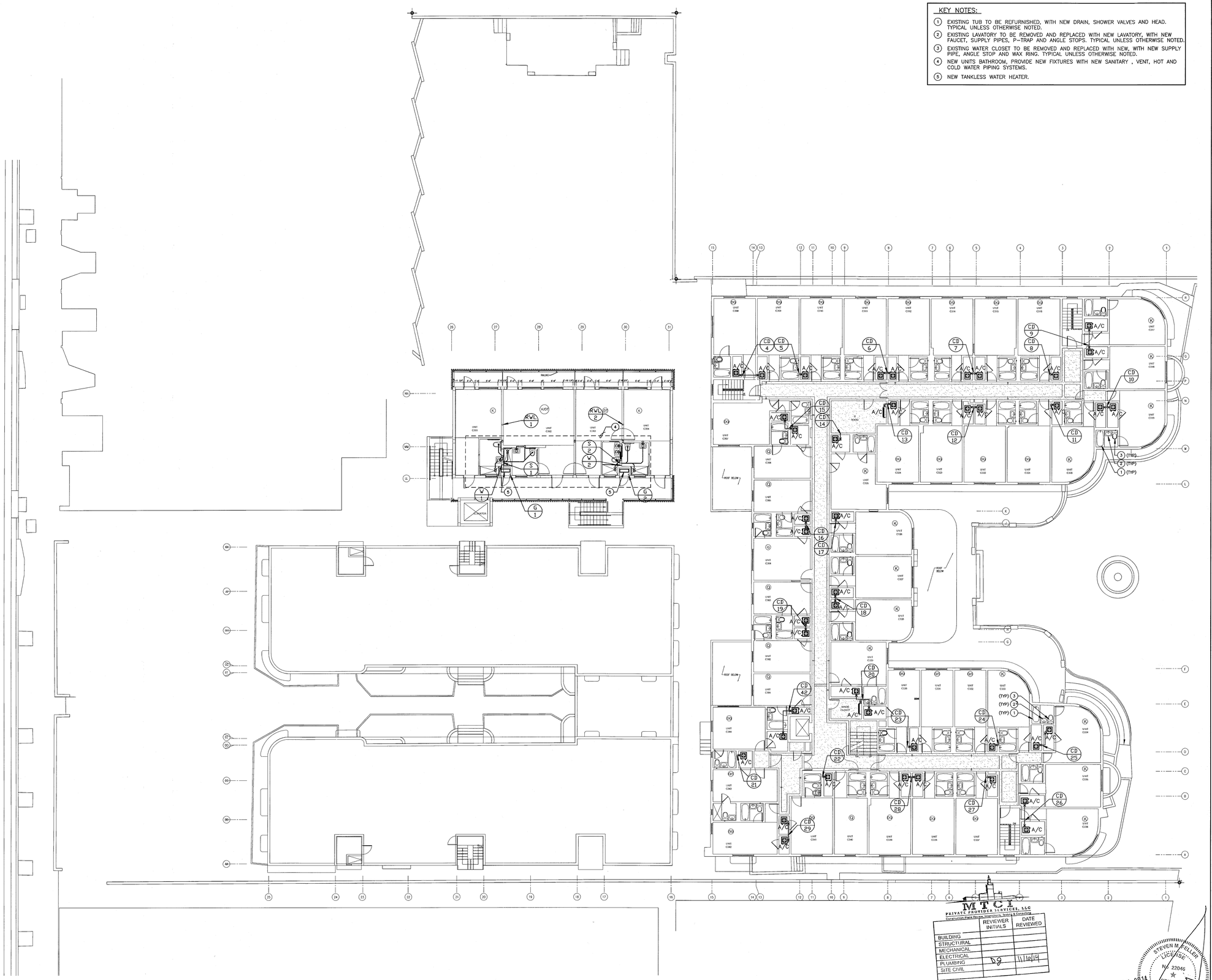

MICI PRIVATE PROVIDER SERVICES, LLC
Construction Plans Review, Inspections, Testing & Consulting

	REVIEWER INITIALS	DATE REVIEWED
BUILDING		
STRUCTURAL		
MECHANICAL		
ELECTRICAL		
PLUMBING	DJ	11/10/14
SITE CIVIL		

FEB 05 2014
STEVEN M. FELLER LICENSE No. 22046 STATE OF FLORIDA PROFESSIONAL ENGINEER
APPROVED MIAMI BEACH FIRE DEPARTMENT

THIRD FLOOR PLUMBING PLAN

SCALE: 3/32"=1'-0"

STEVEN FELLER P.E.,PL
FLORIDA P.E. Reg. # 22046
Certificate of Authorization # 00003427
300 N.E. THIRD AVENUE
FORT LAUDERDALE, FLORIDA 33301
PH: 954.467.1402 FAX: 954.467.5752
e-mail: fellerpe@fellerpe.com
JOB # 13153

HADDON HALL
1500 COLLINS AVE

MIAMI BEACH, FL

KEYPLAN N.T.S.

REVISIONS

NO.	DESCRIPTION	ISSUE DATE

PERMIT SET

NORTH SEAL

Jonathan Cardello
Lic. # AR93391

ADD Inc Architecture Interiors Planning

One Biscayne Tower
Suite 1670
Two South
Biscayne Boulevard
Miami, Fl 33131
T. 305.482.8700
F. 305.482.8770
www.addinc.com
Lic. # AA26001507

Boston Miami

JOB NUMBER:	13036.00
CHECKED BY:	SF
ISSUE DATE:	JANUARY 24, 2014
SCALE:	AS NOTED

SHEET TITLE

THIRD FLOOR PLUMBING PLAN

SHEET NUMBER

P1.04

COPYRIGHT ADD INC 2011

KEY NOTES:

1. NEW ROOF DECK AND SINK, PROVIDE DECK DRAINS FOR DECK, HOSE BIB, NEW SINK AND SANITARY, VENT, HOT AND COLD WATER PIPING SYSTEMS.
2. NEW ROOF DECK, PROVIDE NEW DECK DRAINS AND HOSE BIB.
3. 2" SANITARY PIPE DOWN FROM NEW SINK. CONNECT TO EXISTING SANITARY SYSTEM.

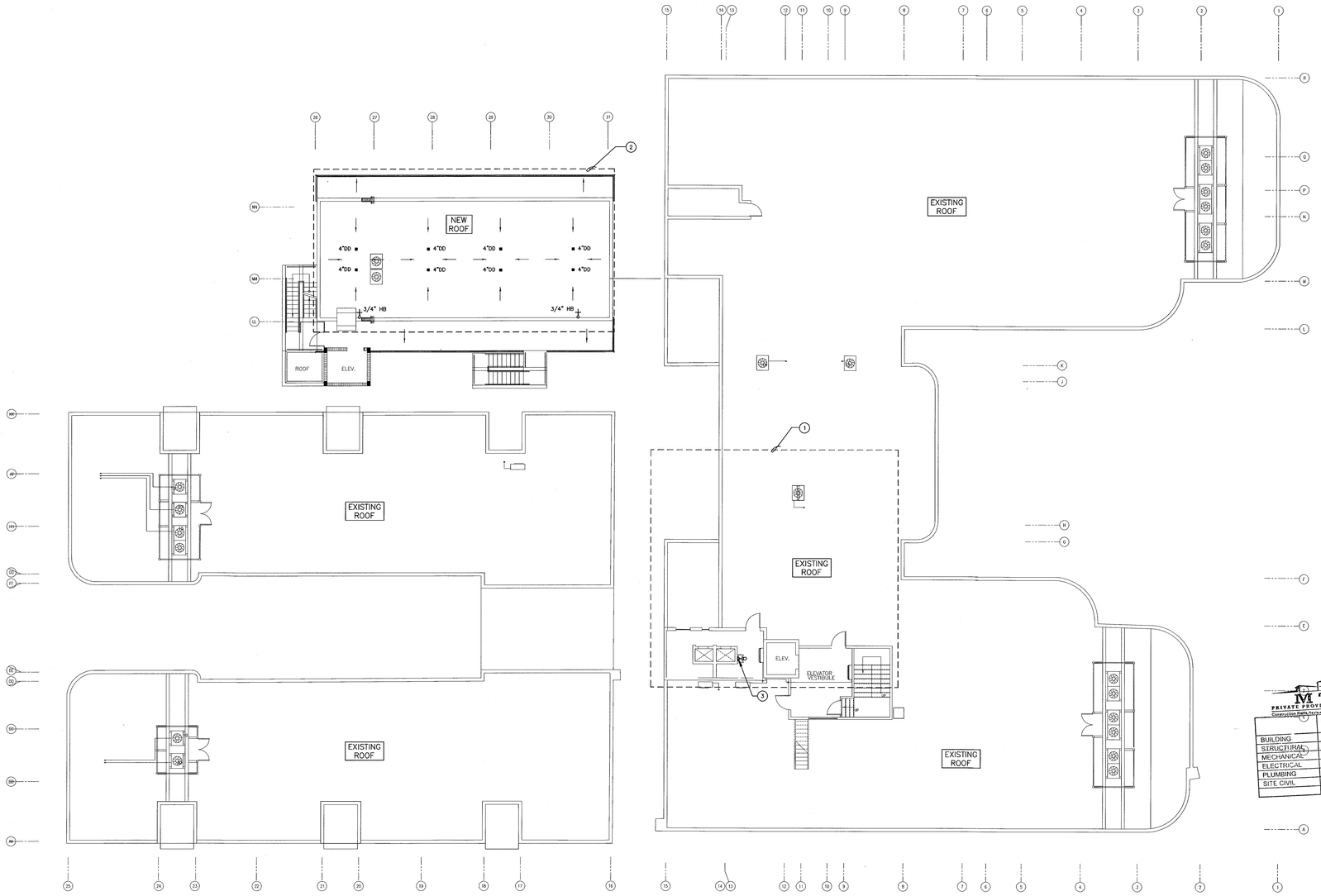

PLUMBING ROOF PLAN
SCALE: 3/32"=1'-0"

MTCI
PRIVATE PROVIDER SERVICES, LLC
Construction Plans Review, Inspections, Testing & Consulting

	REVIEWER INITIALS	DATE REVIEWED
BUILDING		
STRUCTURAL		
MECHANICAL		
ELECTRICAL		
PLUMBING	DJ	11/10/14
SITE CIVIL		

FEB 05 2014

STEVEN M. FELLER
LICENSE
No. 22046
STATE OF FLORIDA
PROFESSIONAL ENGINEER

APPROVED
MIAMI BEACH
FIRE DEPARTMENT

STEVEN FELLER P.E., PL
FLORIDA P.E. Reg. # 22046
Certificate of Authorization # 00003427
300 N.E. THIRD AVENUE
FORT LAUDERDALE, FLORIDA 33301
PH: 954.467.1402 FAX: 954.467.5752
e-mail: fellerpe@fellerpe.com
JOB # 13153

HADDON HALL
1500 COLLINS AVE

MIAMI BEACH, FL

KEYPLAN N.T.S.

REVISIONS

NO.	DESCRIPTION	ISSUE DATE

PERMIT SET

NORTH SEAL

Jonathan Cardello
Lic. # AR93391

ADD Inc Architecture Interiors Planning

One Biscayne Tower
Suite 1670
Two South
Biscayne Boulevard
Miami, Fl 33131
T. 305.482.8700
F. 305.482.8770
www.addinc.com
Lic. # AA26001507

Boston Miami

JOB NUMBER:	13036.00
CHECKED BY:	SF
ISSUE DATE:	JANUARY 24, 2014
SCALE:	AS NOTED

SHEET TITLE

PLUMBING ROOF PLAN

SHEET NUMBER

P1.05

COPYRIGHT ADD INC 2011

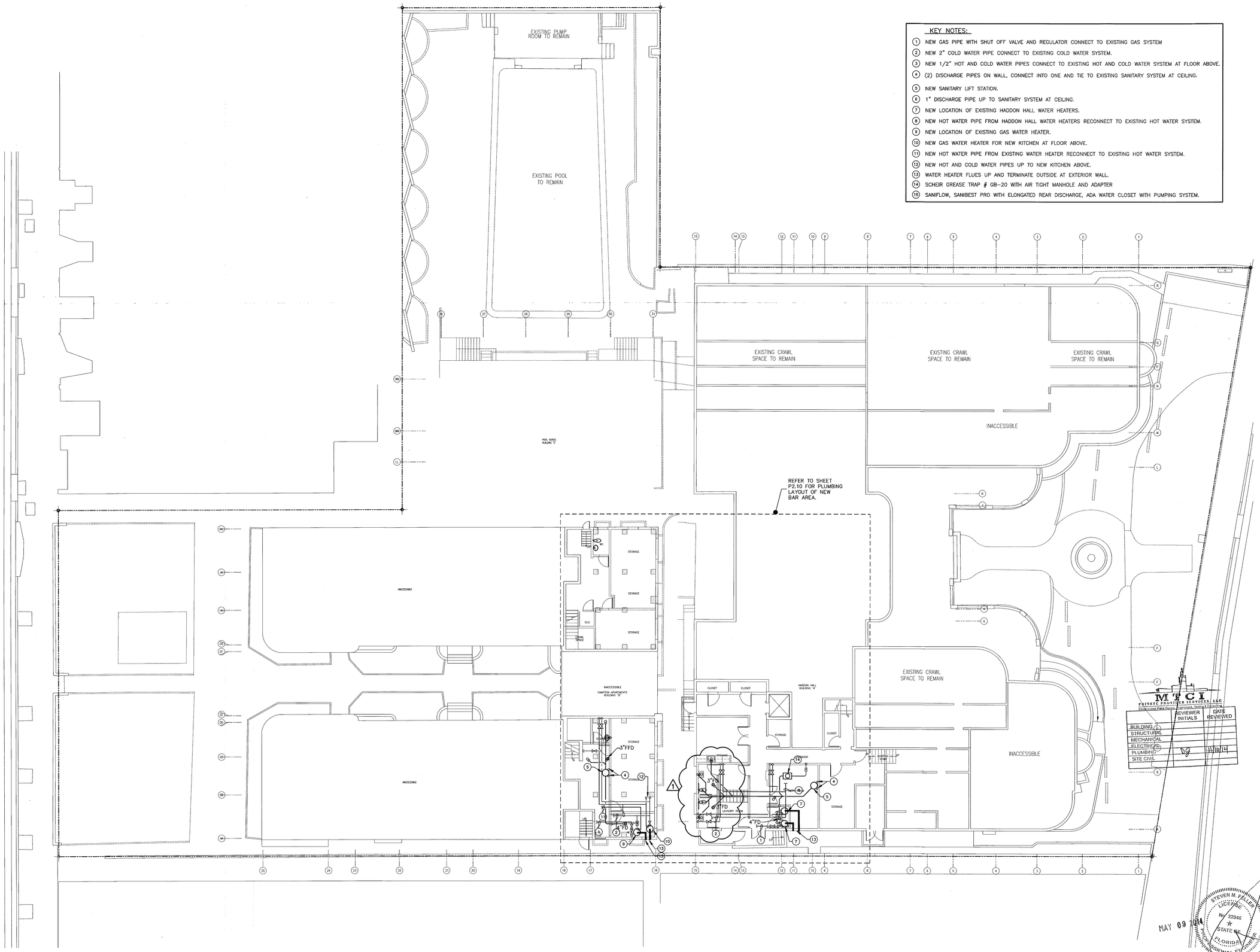

BASEMENT PLUMBING FLOOR PLAN

SCALE: 3/32"=1'-0"

KEY NOTES:

1. NEW GAS PIPE WITH SHUT OFF VALVE AND REGULATOR CONNECT TO EXISTING GAS SYSTEM
2. NEW 2" COLD WATER PIPE CONNECT TO EXISTING COLD WATER SYSTEM.
3. NEW 1/2" HOT AND COLD WATER PIPES CONNECT TO EXISTING HOT AND COLD WATER SYSTEM AT FLOOR ABOVE.
4. (2) DISCHARGE PIPES ON WALL, CONNECT INTO ONE AND TIE TO EXISTING SANITARY SYSTEM AT CEILING.
5. NEW SANITARY LIFT STATION.
6. 1" DISCHARGE PIPE UP TO SANITARY SYSTEM AT CEILING.
7. NEW LOCATION OF EXISTING HADDON HALL WATER HEATERS.
8. NEW HOT WATER PIPE FROM HADDON HALL WATER HEATERS RECONNECT TO EXISTING HOT WATER SYSTEM.
9. NEW LOCATION OF EXISTING GAS WATER HEATER.
10. NEW GAS WATER HEATER FOR NEW KITCHEN AT FLOOR ABOVE.
11. NEW HOT WATER PIPE FROM EXISTING WATER HEATER RECONNECT TO EXISTING HOT WATER SYSTEM.
12. NEW HOT AND COLD WATER PIPES UP TO NEW KITCHEN ABOVE.
13. WATER HEATER FLUES UP AND TERMINATE OUTSIDE AT EXTERIOR WALL.
14. SCHEIR GREASE TRAP # GB-20 WITH AIR TIGHT MANHOLE AND ADAPTER
15. SANIFLOW, SANIBEST PRO WITH ELONGATED REAR DISCHARGE, ADA WATER CLOSET WITH PUMPING SYSTEM.

HADDON HALL
1500 COLLINS AVE

MIAMI BEACH, FL

KEYPLAN N.T.S.

REVISIONS

NO.	DESCRIPTION	ISSUE DATE
1	PROGRESS TO 100% CD SET	02/07/2014

100% CONSTRUCTION DOCUMENT SET

NORTH

SEAL

Jonathan Cardello
Lic. # AR93391

ADD Inc Architecture Interiors Planning

One Biscayne Tower
Suite 1670
Two South
Biscayne Boulevard
Miami, Fl 33131
T. 305.482.8700
F. 305.482.8770
www.addinc.com
Lic. # AA26001507

Boston Miami

JOB NUMBER: 13036.00
CHECKED BY:
ISSUE DATE: MARCH 14, 2014
SCALE: AS NOTED

SHEET TITLE

BASEMENT PLUMBING PLAN

SHEET NUMBER

P1.01

STEVEN FELLER P.E., PL
FLORIDA P.E. Reg. # 22046
Certificate of Authorization # 00003427
500 N.E. THIRD AVENUE
FORT LAUDERDALE, FLORIDA 33301
PH: 954.467.1402 FAX: 954.467.5752
e-mail: fellerpe@fellerpe.com
JOB # 13153

COPYRIGHT ADD INC 2011

KEY NOTES:

1. EXISTING TUB TO BE REFURNISHED, WITH NEW DRAIN, SHOWER VALVES AND HEAD. TYPICAL UNLESS OTHERWISE NOTED.
2. EXISTING LAVATORY TO BE REMOVED AND REPLACED WITH NEW LAVATORY, WITH NEW FAUCET, SUPPLY PIPES, P-TRAP AND ANGLE STOPS. TYPICAL UNLESS OTHERWISE NOTED.
3. EXISTING WATER CLOSET TO BE REMOVED AND REPLACED WITH NEW, WITH NEW SUPPLY PIPE, ANGLE STOP AND WAX RING. TYPICAL UNLESS OTHERWISE NOTED.
4. NEW BAR AREA, PROVIDE NEW FIXTURES WITH NEW SANITARY, VENT, HOT AND COLD WATER PIPING SYSTEMS. (CONNECT TO EXISTING SYSTEMS)
5. NEW UNITS BATHROOM, PROVIDE NEW FIXTURES WITH NEW SANITARY, VENT, HOT AND COLD WATER PIPING SYSTEMS. (CONNECT TO EXISTING SYSTEMS)
6. NEW UNITS BATHROOMS AND PROVIDE NEW FIXTURES WITH NEW SANITARY, VENT, HOT AND COLD WATER PIPING SYSTEMS. (CONNECT TO EXISTING SYSTEMS)
7. NEW SEATING AREA AND JUICE BAR, PROVIDE DECK DRAINS AND HOSE BIB IN SEATING AREA AND SANITARY, VENT, HOT AND COLD WATER PIPING SYSTEM IN JUICE BAR AREA.
8. NEW KITCHEN AREA, PROVIDE SANITARY, GREASE, HOT AND COLD WATER PIPING SYSTEM AND 1,250 GALLON GREASE TRAP.
9. 4" SANITARY PIPE FOR NEW BAR. REFER TO SHEET P2.10 FOR CONTINUATION.
10. REFER TO SHEET P2.11 FOR CONTINUATION.
11. NEW GAS PIPE CONNECT TO EXISTING METER.
12. ELEVATOR SUMP PIT W/PUMP.
13. NEW GAS PIPE SLEEVE THROUGH WALL AND TURN UP.
14. 4" GREASE WASTE PIPE FROM NEW KITCHEN.
15. 1,250 GALLON GREASE TRAP.
16. 3" CONDENSATE PIPE @ 1/8" / FT CONNECT TO STORMDRAIN SYSTEM. REFER TO CIVIL DWGS FOR CONTINUATION.
17. 4" SANITARY PIPE @ 1/8" / FT CONNECT TO SANITARY SYSTEM. REFER TO CIVIL DWGS FOR CONTINUATION.
18. 6" STORMDRAIN PIPE @ 1/8" / FT CONNECT TO STORMDRAIN SYSTEM. REFER TO CIVIL DWGS FOR CONTINUATION.
19. NEW GAS PIPE RUNS BELOW GRADE WITH NO JOINT IN SLEEVE.
20. NEW WATER PIPE RUNS BELOW GRADE WITH NO JOINT IN SLEEVE.
21. NEW 2" CONDENSATE RISER.
22. CONNECT NEW 3" SANITARY PIPE TO EXISTING SANITARY SYSTEM.
23. NEW GAS RISER UP FOR TANKLESS GAS WATER HEATERS.
24. NEW GAS AND COLD WATER RISERS.
25. NEW COLD WATER PIPE UP.
26. NEW GAS, 120° HWR, 120° HOT, 140° HOT AND COLD WATER PIPES UP. REFER TO SHEET P2.11 FOR CONTINUATION.
27. 3" FIRE SPRINKLER DRAIN RISER.
28. FROM 3" FIRE SPRINKLER DRAIN PIPE AT BASEMENT LEVEL. REFER TO SHEET P2.10 FOR CONTINUATION.
29. 3/4" HOSE BIBB WITH SHUT OFF VALVE AND VACUUM BREAKER.
30. REFER TO CIVIL DWGS FOR POOL SHOWER DRAINAGE.

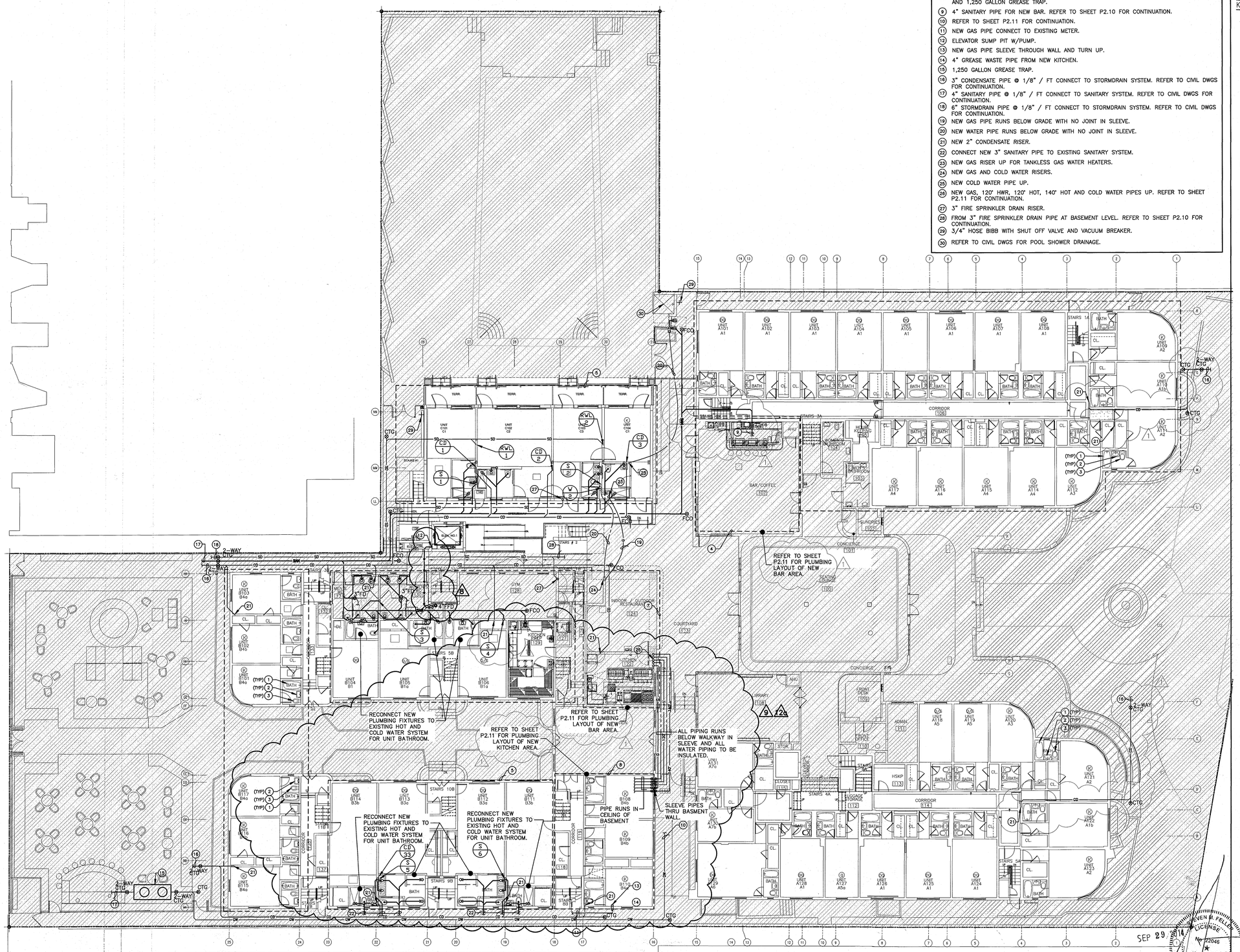

GROUND FLOOR PLUMBING PLAN

SCALE: 3/32"=1'-0"

HADDON HALL
1500 COLLINS AVE

MIAMI BEACH, FL

KEYPLAN N.T.S.

REVISIONS

NO.	DESCRIPTION	ISSUE DATE
1	PROGRESS TO 100% CD SET	02/07/2014
8	DERM COMMENTS	04-23-14
9	KITCHEN RELOCATION	05-30-14
12a	FIRE DEP'T. COMM.	09-29-14

MTCI
PRIVATE PROVIDER SERVICES, L&C
Construction Plans Review, Inspections, Testing & Contracting

	REVIEWER INITIALS	DATE REVIEWED
BUILDING		
STRUCTURAL		
MECHANICAL		
ELECTRICAL		
PLUMBING	DP	11/10/14
SITE CIVIL		

100% CONSTRUCTION DOCUMENT SET

NORTH

SEAL

Jonathan Cardello
Lic. # AR93391

ADD Inc Architecture Interiors Planning

One Biscayne Tower
Suite 1670
Two South
Biscayne Boulevard
Miami, Fl 33131
T. 305.482.8700
F. 305.482.8770
www.addinc.com
Lic. # AA26001507

Boston Miami

JOB NUMBER: 13036.00
CHECKED BY:
ISSUE DATE: MARCH 14, 2014
SCALE: AS NOTED

SHEET TITLE

GROUND FLOOR PLUMBING PLAN (PIPE BELOW SLAB)

SHEET NUMBER

P1.02

STEVEN FELLER P.E., P.C.
FLORIDA P.E. Reg. # 22046
Certificate of Authorization # 00003427
520 N.E. THIRD AVENUE
FORT LAUDERDALE, FLORIDA 33301
PH: 954.467.1402 FAX: 954.467.5752
e-mail: felleape@felleape.com
JOB # 13153

STEVEN R. FELLER LICENSE No. 22046 STATE OF FLORIDA PROFESSIONAL ENGINEER

SEP 29 2014 APPROVED MIAMI BEACH FIRE DEPARTMENT

COPYRIGHT ADD INC 2011