"HADDON HALL" ROOF EGRESS CALCULATIONS

MAXIMUM OCCUPANCY (FBC TABLE 1004.1.1 & NFPA TABLE 7.3.1.)

ROOM #	FUNCTION OF SPACE	OCCUPANCY	OCCUPANT LOAD FACTOR	GROSS FLOOR AREA	TOTAL OCCUPANTS (PERSONS)
400	ELEVATOR VESTIBULE	STORAGE (S-2)	300 GSF PER PERSON	238 GSF	1
401	STORAGE	STORAGE (S-2)	300 GSF PER PERSON	120 GSF	1
402	STORAGE	STORAGE (S-2)	300 GSF PER PERSON	118 GSF	1
	TOTAL				3 PERSONS

"HADDON HALL" ROOF EGRESS CAPACITY PER OCCUPANT SERVED (FBC TABLE 1005.1 & NFPA TABLE 7.3.3.1)

H2.1	H2.2	H2.3	CUMULATIVE TOTAL OCCUPANTS	MINIMUM REQ. WIDTH (LEVEL)	PROVIDED	MINIMUM REQ. WIDTH (STAIRWAY & RAMPS)	PROVIDED
22 OCC.			22 OCC./ 1 EXIT = 22 OCC./EXIT	22 OCC. @ 0.2/OCC. = 4.4"	36"	22 OCC. @ .3 OCC. = 6.6"	36"

4

NOTES:
1. FOR SPRINKLER HEAD LOCATION REFER TO FIRE PROTECTION DRAWINGS; SEE FP SHEETS
2. REFER TO ELECTRICAL DRAWINGS FOR EMERGENCY LIGHTING.
3. A 44" CLEAR PATH MUST BE MAINTAINED ALONG EGRESS PATH.
4. ALL PAVING ALONG EGRESS PATH MUST COMPLY WITH F.F.P.C. 7.1.8.4.
5. PROVIDE A SMOKE DETECTOR AND SOUNDER BASE AT EACH SIDE OF THE GUESTROOM DOOR AT UNIT NUMBERS: A101, A109, A123, A208, A2217, A236, A308, A317, A336 INTERCONNECT THEM TO INITIATE ALARMS IN UNISON. 1

LIFE SAFETY PLAN NOTES

1. ALL PENETRATIONS THROUGH FIRE-RATED PARTITIONS AND BARRIERS MUST BE BUILT ACCORDING TO THE UL-LISTED FIRE-RESISTANCE DIRECTORY'S DESIGNS.
2. ALL PENETRATIONS THROUGH SMOKE-RATED PARTITIONS AND BARRIERS MUST UTILIZE PRODUCTS TO RESIST THE PASSAGE OF AIR AND SMOKE. 4
3. PORTABLE FIRE EXTINGUISHERS SHALL BE PROVIDED IN EVERY ASSEMBLY OCCUPANCY IN ACCORDANCE NFPA 10 (STANDARD FOR PORTABLE FIRE EXTINGUISHERS) PER N.F.P.A 101 9.7.4.1. THE QUANTITY AND LOCATIONS WILL BE REVIEWED AND APPROVED WITH THE AUTHORITY HAVING JURISDICTION.
4. NO DUCTS, PIPING, OR CONDUITS WILL BE PERMITTED WITHIN THE EXIST STAIR ENCLOSURE UNLESS THEY SERVE THE STAIR.
5. LIFE SAFETY DRAWINGS TO SUPERCEDE ALL OTHER DISCIPLINES.
6. FIRE ALARM AND SPRINKLERS WORK IS INCLUDED WITHIN SCOPE OF THESE ROOMS.
7. EXISTING WALLS NOT IN SCOPE OF WORK UNLESS OTHERWISE NOTED WITH RATING SYMBOL. 4
8. EXISTING SMOKE DETECTORS OCCUR IN ALL HADDON HALL AND CAMPTON APARTMENT GUESTROOMS. NEW SMOKE DETECTORS TO BE PROVIDED IN POOL SUITES BUILDING AND RECONFIGURED CAMPTON ROOMS
9. ANY GATES ALONG THE MEANS OF EGRESS MUST BE OPERABLE WITHOUT THE USE OF A KEY, TOOL OR SPECIAL KNOWLEDGE. 4
10. ANY DOOR S SWINGING INTO THE REQUIRED MEANS OF EGRESS MUST BE SELF CLOSING

These drawings do not depict and/or provide design direction for specific fire protection systems within the City of Miami Beach. These drawings do indicate rated fire and fire/smoke barriers, rated horizontal and vertical exit enclosures, smoke partitions, exit access passageways and other fire and life safety architectural features as required by local authority having jurisdiction (City of Miami Beach Fire Department and City of Miami Beach Building Department), Florida Building Code, 2004 Edition (FBC), and the applicable codes and standards referenced within the FBC for the type occupancy.

These drawings provide general guidance to design professionals and indicate fire and fire/smoke separations for the purpose of designing smoke management zones, automatic suppression zones and emergency voice alarm communication zones which are to be in concert with architectural fire & life safety features, as required by code.

LIFE SAFETY PLAN LEGEND

- 1 — CUMULATIVE NUMBER OF OCCUPANTS ALONG EGRESS PATH
- B — FUNCTION OF SPACE
- 1500 SF — GROSS FLOOR AREA (SF)
- 15 — ROOM OCCUPANT LOAD FACTOR (TABLE 1004.1.1)
- B-1 / 168 35 — EXIT NUMBER; USE/ # OF OCCUPANTS; CAPACITY OF OCCUPANTS
- EXIT NUMBER
- 51 — MINIMUM EGRESS WIDTH REQUIRED
- 32" — EGRESS WIDTH PROVIDED
- 60" — MINIMUM STAIR WIDTH REQUIRED
- 44" — STAIR WIDTH PROVIDED
- 144" — STAIR WIDTH PROVIDED
- 5 — SMOKE PARTITION 1
- 1 — ONE HOUR FIRE RATING
- 2 — TWO HOUR FIRE RATING
- 3 — THREE HOUR FIRE RATING
- 4 — FOUR HOUR FIRE RATING
- 20 — DOOR RESISTS THE PASSAGE OF SMOKE
- 20 — 20 MIN. RATED DOOR ASSEMBLY
- 45 — 45 MIN. RATED CLASS "C" DOOR ASSEMBLY
- 90 — 1 1/2 HR. RATED CLASS "B" DOOR ASSEMBLY
- 180 — 3 HR. RATED CLASS "A" DOOR ASSEMBLY
- CEILING MOUNTED
- WALL MOUNTED
- 120 — 120 VOLT
- SP
- MH
- FEC — FIRE EXTINGUISHER CABINET
- FE — BRACKET MOUNTED FIRE EXTINGUISHER
- FIRE SPRINKLERS
- FIRE ALARM DEVICE VISUAL SIGNAL
- FIRE ALARM DEVICE COMBINATION SIGNAL
- FIRE ALARM SPEAKER SIGNAL
- HEAT DETECTOR
- WALL MOUNTED SMOKE DETECTOR
- CEILING MOUNTED SMOKE DETECTOR
- F — FIRE ALARM DEVICE PULL STATION
- FS — FLOW SWITCH
- TS — TAMPER SWITCH
- VB — VALVE BOX

REVISION 12a – MODIFICATIONS ONLY ON HADDON AND CAMPTON BUILDINGS
- DEMISING WALLS BETWEEN GUESTROOMS UNITS REVISED TO SHOW EXISTING ½-HOUR PARTITION
- DEMISING WALLS BETWEEN GUESTROOMS AND CORRIDORS REVISED TO SHOW EXISTING SMOKE PARTITIONS AT GUESTROOM CORRIDORS
- THE 20 MINUTE RATING HAS BEEN REMOVED FROM GUESTROOM CORRIDOR DOORS AS ONLY SMOKE TIGHT DOORS ARE REQUIRED
- STAIR ENCLOSURE IS SHOWN AS EN EXISTING 1-HOUR PARTITION
- DOORS AT EGRESS STAIRS HAVE BEEN LABELED AS 60 MINUTES
- EXISTING GUESTROOM DOORS OPENING INTO THE EGRESS STAIRS HAVE BEEN LABELED AS 60 MINUTES
- A 1-HOUR SEPARATION BETWEEN IT, STORAGE, AND HOUSEKEEPING ROOMS WITH A 45 MINUTE LABELED DOOR HAS BEEN NOTED THROUGHOUT 12a

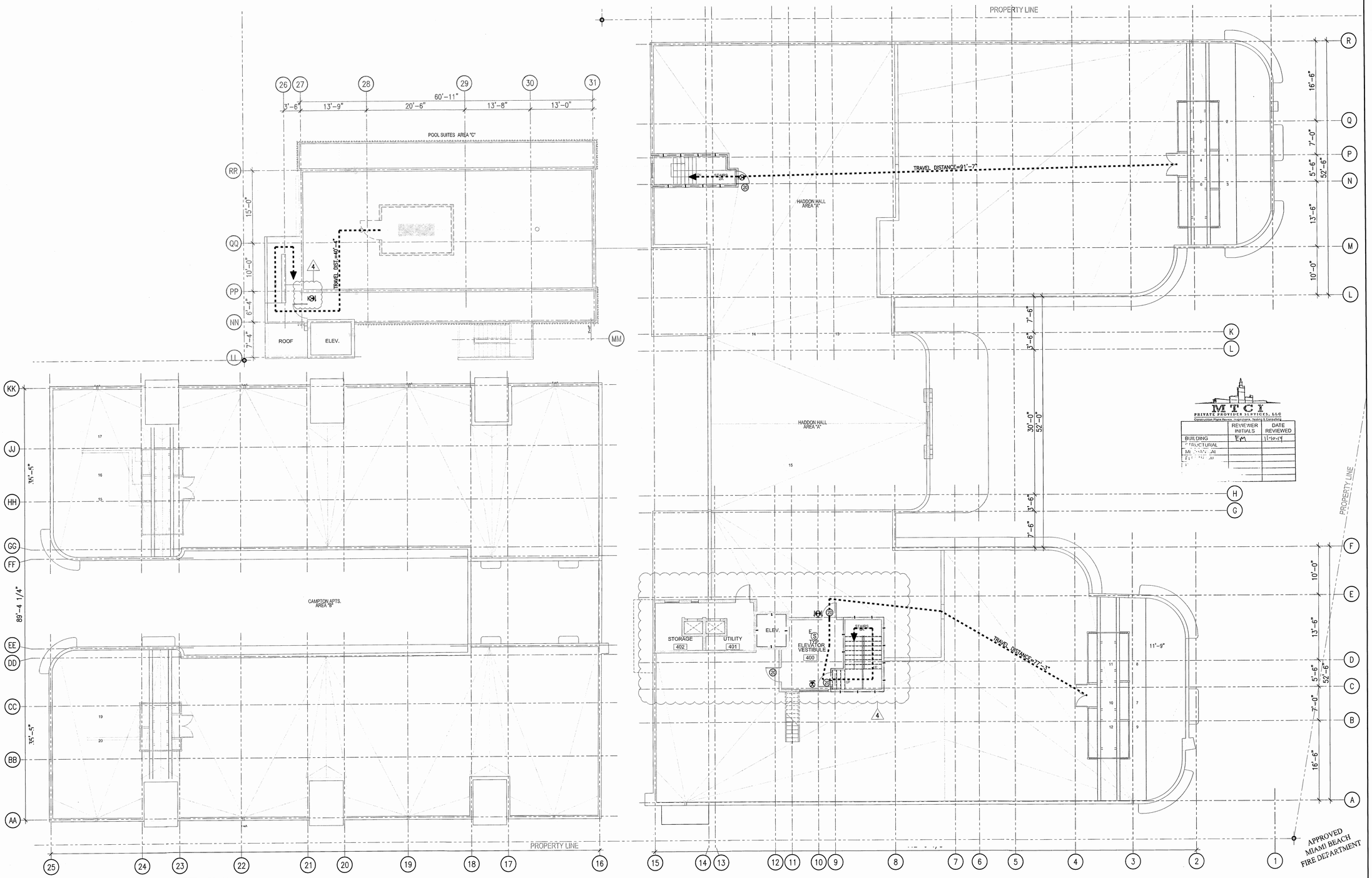

1 FOURTH FLOOR – LIFE SAFETY PLAN
SCALE: 1/8" = 1'-0"

MITCY PRIVATE PROVIDER SERVICES, LLC
Construction Plans Review, Inspections, Testing & Consulting

	REVIEWER INITIALS	DATE REVIEWED
BUILDING	EM	11-10-14
STRUCTURAL		
MECHANICAL		
ELECTRICAL		

HADDON HALL
1500 COLLINS AVE
MIAMI BEACH, FL

KEYPLAN N.T.S.

REVISIONS

NO.	DESCRIPTION	ISSUE DATE
1	PROGRESS TO 100% CD	02-18-2014
4	FIRE REVIEW COMMENTS	04-01-2014
12a	FIRE PERMIT COMMENTS	09-29-2014

100% CONSTRUCTION DOCUMENT SET

NORTH SEAL

10-9-14
Jonathan Cardello
Lic. # AR93391

ADD Inc Architecture Interiors Planning

One Biscayne Tower
Suite 1670
Two South
Biscayne Boulevard
Miami, Fl 33131
T. 305.482.8700
F. 305.482.8770
www.addinc.com
Lic. # AA26001507

Boston Miami

JOB NUMBER: 13036.00
CHECKED BY:
ISSUE DATE: FEBRUARY 18, 2014
SCALE: 1/8" = 1'-0"

SHEET TITLE

LIFE SAFETY PLAN
FOURTH FLOOR

SHEET NUMBER

LS-104

COPYRIGHT ADD INC 2011

SLS Consulting, Inc.
1825 Ponce de Leon Blvd. #565
Coral Gables, FL 33134
Office – (786) 558 - 7611
www.sls4fire.com

July 16, 2014

HAND DELIVER:

Juan Melzoso – Fire Marshal
Miami Beach Fire Department
1701 Meridian Avenue
Miami Beach, FL 33130

HADDON HALL – MIAMI BEACH, FLORIDA
PROTECTION OF VERTICAL OPENING - ALTERNATIVE METHOD

Dear Chief Melzoso:

SLS Consulting, Inc. (SLS) has prepared this letter on behalf of Rockwood Capital LLC, and the Haddon Hotel design team (ADD, Inc. and Steven Feiler). The project is located at 1500 Collins Avenue in Miami Beach, Florida. The purpose of this letter is to outline a proposed *alternative method of approach* to achieve compliance with the intent of the applicable codes regarding an existing historic stair which extends from the Main Lobby vertically to each guestroom story.

Outlined below are the prescriptive methods of code compliance of the applicable codes for the project (i.e. 2010 Editions of the *Florida Building Code* (FBC) and the *Florida Fire Prevention Code* (FFPC)) which take into account allowances as a *historic building* and to outline the inherent and added fire protection and life safety features which are proposed in support of the *alternative method* request. It is understood that this letter, if endorsed by the City of Miami Beach Fire Department, will serve as an official project document and will be permanently affixed to the record plans for permit.

BACKGROUND DISCUSSION

The applicable codes for the project include the 2010 Editions of the FBC-*Existing Buildings* and FFPC. Based on discussions with the design and development team, it is the understanding of SLS Consulting, Inc. that the scope of work at Haddon Hall is intended to comply with the minimum requirements of the prescriptive codes (without deviation) with the lone exception of the proposed *alternative method of approach* (as described in this letter) regarding an existing unprotected vertical opening. A brief description of the existing Haddon Hall facility and the proposed improvements are provided in the bullets below:

© 2014 All Rights Reserved. SLS Consulting, Inc.

- **Historic Haddon Hall Building:** The existing Haddon Hall Hotel building (including its Main Lobby) is a designated *historic structure contributing to the City's historic character* by the City of Miami Beach Historic Preservation Board. The existing building contains three (3) stories of hotel guestrooms, Use Group R-1 *Residential* occupancy. Each of the three levels of guestrooms are served by three (3) exit stair enclosures (located in the NE, NW, and SE corners of the building) which are each protected by 1-hour fire resistance rated construction. There is a fourth stair (located in the SW part of the building) which runs unprotected and open to the corridors at each level. This open stair (which is a common feature within many vintage hotels in Miami Beach) forms the *vertical opening* condition addressed by this letter.

- **Historic Main Lobby:** The First Floor Level guestrooms are slightly elevated above the Main Lobby, another characteristic which is common in many vintage hotels on Miami Beach. Within the proposed scope of improvements (as approved by the Historic Preservation Board), is the "*preservation*" and/or "*restoration*" of the existing Main Lobby. Although it is intended that the guestroom corridors on the Second and Third Levels be separated (protected) from this existing "open stair" condition (in accordance with the applicable codes), it is understood by the design team (as expressed by the City of Miami Beach Historic Preservation Board) that enclosing or separating this stair from the First Floor landing would negatively impact the historic character of the Main Lobby.

PROTECTION OF VERTICAL OPENINGS - CODE REQUIREMENTS

Section 43.10.4.7.1 of the FFPC-2010 permits the following:

"*Stairways shall be permitted to be unenclosed in a historic building where such stairways serve only one adjacent floor.*"

Section 43.10.4.7.2 of the FFPC-2010 requires the following:

"*In buildings three or fewer stories in height, exit enclosure construction shall limit the spread of smoke by use of tight-fitting doors and solid elements; however such elements shall not be required to have a fire rating.*"

Section 29.3.1.1.1 of the FFPC-2010 requires the following:

"*Vertical openings shall be enclosed or protected in accordance with Section 8.6.*"

Section 29.3.1.1.2 of the FFPC-2010 permits the following:

"*Vertical openings in accordance with Section 8.6.8.2 shall be permitted.*"

Section 8.6.8.2 of the FFPC-2010 permits the following:

"*Unenclosed vertical openings not concealed within the building construction shall be permitted as follows:*

(1) Such openings shall connect not more than two adjacent stories (one floor pierced only).
(2) Such openings shall be separated from unprotected vertical openings serving other floors by a barrier complying with Section 8.6.5.
(3) Such openings shall be separated from corridors.
(4) N/A – refers to new construction only
(5) Such openings shall not serve as a required means of egress.

Section 7.1.3.2.1(1) of the FFPC-2010 requires the following:

"*The separation shall have a minimum one (1) hour fire resistance rating where the exit connects three (3) stories or less.*"

Code Interpretations regarding Deficiencies:

It is the opinion of SLS Consulting, Inc., that, based on the proposed design configuration by ADD Inc, the three (3) exit stair enclosures serving each guestroom corridor of the building shall limit the spread of smoke (in accordance with Section 43.10.4.7.2), and that the existing open stair, in the SW part of the building, should not be considered a required exit for the building.

Given the minimum construction classification of the existing building, Type 2B (0,0,0), it is understood the existing floor/ceiling assemblies at the corridors are not required to have a fire resistance rating. In light of this, it is the opinion of SLS Consulting, Inc., that the open stair condition, will be consistent with the intent of the requirements of Section 8.6.8.2, for an unprotected vertical opening, provided the stairs are separated from the corridors at the Second and Third Floors by smoke resistant construction.

PROPOSED ALTERNATIVE METHOD OF APPROACH

The following fire protection and life safety features are proposed to be incorporated into the proposed design in order to provide an equivalent level of protection currently required by the FFPC:

- Protect the three existing exit stair enclosures with one (1) hour fire resistance rated construction and door assemblies with 60-minute labels. Although Section 43.10.4.7.2 of the FFPC only requires exit enclosure construction to limit the spread of smoke by use of tight-fitting doors and solid elements, an increase in the level of fire protection and life safety is proposed by providing a fire resistance rating of one hour and the walls and door assemblies.
- Separate the existing unprotected vertical opening "open stair" from the guestroom corridors on the Second and Third Floors by construction which resists the passage of smoke. Although the stair opening connects the three (3) levels of the building, separation construction is proposed in order to isolate the vertical opening from the Second and Third Floors. Refer to the Figures on the next page.

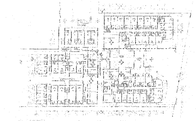

Haddon Hall Hotel - First Floor Level
(yellow = corridor / green = vertical opening / orange = exit enclosure)

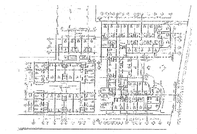

Haddon Hall Hotel - Second Floor Level
(yellow = corridor / green = vertical opening / orange = exit enclosure)

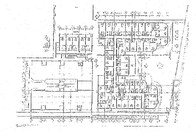

Haddon Hall Hotel - Third Floor Level
(yellow = corridor / green = vertical opening / orange = exit enclosure)

- Provide system connected smoke detectors within the First Floor guestroom corridor and Main Lobby. It is noted, that as a building protected throughout by automatic sprinklers, smoke detection is not required by the minimum requirements of FBC or the FFPC; however additional means of detection is proposed in order to provide occupants early warning in the event of a fire incident.
- Draft stops with closely spaced sprinklers designed in accordance with Section 8.14.4.3 of NFPA 13, *Standard for the Installation of Sprinklers* (2007) will be installed around the First Floor ceiling at the edge of the "open stair". Although draft stops are not required, since it is proposed the stair opening be isolated from the Second and Third Floors, these additional features of protection are proposed to further prevent the migration of smoke vertically within the SW historic stair. As part of the proposed configuration, the following requirements will be provided:
  - Draft stops to be located immediately adjacent to the opening at the First Floor;
  - Draft stops to be a minimum of 18-inches deep;
  - Draft stops will be of non-combustible or limited combustible construction that will stay in place before and during sprinkler operation.
  - Sprinklers will be spaced not more than six (6) feet apart and placed 6-inches to 12-inches from the draft stops on the sides opposite the opening.

CONCLUSION

It is understood the complexities and constraints inherent with these types of vintage hotels in Miami Beach, make an *alternative method of approach* an appropriate means for addressing existing construction conditions. In respect of this, and in an effort to "*preserve*" the historic character of the construction, it is the opinion of SLS Consulting, Inc., that the proposed fire protection features (described above), will provide a level of protection and safety which is equivalent to or greater than that currently required by the FFPC, and therefore request the City of Miami Beach Fire Department accept this alternate method of approach.

Please do not hesitate to contact us with any questions.

Very Truly Yours,
SLS Consulting, Inc.

Michael Sheehan, P.E.

Alternative Method Approval – Haddon Hall Hotel – Protection of Vertical Opening

City of Miami Beach Fire Department — Date 8/7/14

SLS #295 sls01014_SLS 295 Haddon Hall Hotel - Alternative Method of Approach – Protection of Vertical Opening

12

SLS Consulting, Inc.
1825 Ponce de Leon Blvd. #565
Coral Gables, FL 33134
Office – (786) 558 - 7611
www.sls4fire.com

October 01, 2014

HAND DELIVER:

Juan Melzoso – Fire Marshal
Miami Beach Fire Department
1701 Meridian Avenue
Miami Beach, FL 33130

HADDON HALL – MIAMI BEACH, FLORIDA
CLARIFICATION - PROTECTION AT EXIT ENCLOSURES

Dear Chief Melzoso:

SLS Consulting, Inc. (SLS) has prepared this letter on behalf of Rockwood Capital LLC, and the design team (ADD, Inc. and Steven Feiler), for the Haddon Hall project, located at 1500 Collins Avenue in Miami Beach, Florida. The purpose of this letter is to clarify the implementation of a previously approved *alternate method* and to clarify the code compliance and appropriateness of the existing construction with respect to the protection of exit *stairs* within the existing buildings in the Haddon Hall Hotel project.

The applicable codes for the project are the 2010 Editions of the *Florida Building Code* (FBC) and the *Florida Fire Prevention Code* (FFPC). Within each, special criteria is provided for existing structures designated as "*historic*" (more specifically, FBC-*Existing Buildings* and *Chapter 43* of the FFPC). It is understood that this clarification letter, upon endorsement from the City of Miami Beach Fire Department, will serve as an official project document and will be permanently affixed to the record plans for permit.

BACKGROUND DISCUSSION

Based on the documents submitted for permit (as prepared by the design team), it is the understanding of SLS Consulting, Inc. that the scope of work at Haddon Hall is intended to comply with the minimum requirements of the prescriptive codes (without deviation) with the lone exception of the previously approved *alternative method of approach* (copy provided in this letter) regarding the existing exit enclosures within the Main Building. A brief description of the existing Haddon Hall facility and the proposed improvements are provided below:

© 2014 All Rights Reserved. SLS Consulting, Inc.

- **Haddon Hall (Main) Building:** The existing Haddon Hall Hotel building (including its Main Lobby) is a designated *historic structure contributing to the City's historic character* by the City of Miami Beach Historic Preservation Board. The existing building contains three (3) stories of hotel guestrooms, Use Group R-1 *Residential* occupancy. Each of the three levels of guestrooms are served by three (3) exit stair enclosures (located in the NE, NW, and SE corners of the building) which are each protected by 1-hour fire resistance rated construction (consisting of cast-in-place concrete). There is a fourth stair (located in the SW part of the building) which is a convenience stair and is to be protected by non-rated smoke barriers at the second and third levels (as described in the previously approved *alternate method of approach* letter).

PREVIOUSLY APPROVED *ALTERNATIVE METHOD OF APPROACH*

The following fire protection and life safety features are to be incorporated into the proposed design in order to provide an equivalent level of protection currently required by the FFPC:

1) Protect the three existing exit stair enclosures with one (1) hour fire resistance rated construction and door assemblies with 60-minute labels. Although Section 43.10.4.7.2 of the FFPC only requires exit enclosure construction to limit the spread of smoke by use of tight-fitting doors and solid elements, an increase in the level of fire protection and life safety is proposed by providing a fire resistance rating of one hour and the walls and door assemblies.
2) Separate the existing unprotected vertical opening "open stair" from the guestroom corridors on the Second and Third Floors by construction which resists the passage of smoke. Although the stair opening connects the three (3) levels of the building, separation construction is proposed in order to isolate the vertical opening from the Second and Third Floors.

- **Compton Buildings:** The existing Compton Buildings (located directly behind the Main Building) is actually two buildings (North and South Wing) which mirror each other. Both of these structures are also designated as *historic structures contributing to the City's historic character* by the City of Miami Beach Historic Preservation Board. The existing Compton buildings contain only two (2) stories each, of hotel guestrooms, Use Group R-1 *Residential* occupancy. Within the scope of work of the North Wing, a few of the first floor guestrooms are proposed to be converted to accessory assembly spaces for all hotel guests of the Haddon Hall facility. Each of the wings of the Compton Buildings are segmented into three (3) separate cores (East, West and Central). Both the East and West cores contain two (2) exit stairs connected by a common corridor. The Central core of each wing contains two (2) exit stairs which are not connected by a common corridor.

CLARIFICATION OF CODE COMPLIANCE

The following code excerpts are provided to help demonstrate full compliance with the minimum requirements at each of the exit stairs within the Compton Buildings:

Section 43.10.4.7.1 of the FFPC-2010 permits the following:

"*Stairways shall be permitted to be unenclosed in a historic building where such stairways serve only one adjacent floor.*"

All existing stairs within the Compton Buildings serve only one adjacent floor.

Section 43.10.4.7.2 of the FFPC-2010 requires the following:

"*In buildings three or fewer stories in height, exit enclosure construction shall limit the spread of smoke by use of tight-fitting doors and solid elements; however such elements shall not be required to have a fire rating.*"

Within each East and West core of the Compton Buildings, where the exit stairs are connected by a common corridor, at least one exit stair is separated from the corridor by non-rated smoke barriers and doors which restrict the passage of smoke.

Within each Central core of the Compton Buildings, where the exit stairs are <u>not</u> connected by a common corridor, both exit stairs are separated from the remaining building by non-rated smoke barriers and doors which restrict the passage of smoke.

Section 29.3.1.1.4 of the FFPC-2010 permits the following:
"*In buildings two or fewer stories in height, unprotected openings shall be permitted by the authority having jurisdiction to continue to be used where the building is protected throughout by an approved automatic sprinkler system…*"

Per Table 1018.1 of the FBC-2010:
Corridors, in Group R occupancies, which serve no more than 10 occupants, shall <u>not</u> require a fire-resistance rating.

Section 1022.1 *Exception* 1 of the FBC-2010 permits the following:
"*In all occupancies, other than Group H and I occupancies, a stairway is not required to be enclosed when the stairway serves an occupant load of less than 10 and… the stairway is open to not more than one story above its level of exit discharge.*"

Within each East and West core of the Compton Buildings, the corridor serves an occupant load of no more than 10 occupants and the exit stair (open to the corridor) serves an occupant load of less than 10 occupants. As such, the open stair and corridor are permitted to be separated from the remaining building by non-rated smoke barriers and doors which restrict the passage of smoke. It is noted, based on visual observation by SLS Consulting, Inc., that the existing gypsum lath and plaster on wood framing provides wall assemblies (at both the corridors and exit stairs) which constitute adequate construction methods to effectively resist the passage of smoke.

12a

CONCLUSION

It is understood, that often times, the complexities and constraints inherent within vintage hotels, such as the Haddon Hall facility in Miami Beach, makes it necessary for the implementation of an *alternate method* or to provide a *code compliance clarification* in order to support design approaches during rehabilitation efforts. In respect of this, and in an effort to "*preserve*" the historic character of the construction, it is the opinion of SLS Consulting, Inc., that the proposed design approaches (detailed above and as previously approved) will provide a level of protection and safety which is equivalent to or greater than that currently required by the FFPC, and therefore request the endorsement and acceptance, from the City of Miami Beach Fire Department, for use in this project.

Please do not hesitate to contact us with any questions.

Very Truly Yours,
SLS Consulting, Inc.

Michael Sheehan, P.E.

Haddon Hall Hotel – Protection of Exit Stairs (Main Building & Compton Buildings)

City of Miami Beach Fire Department — Date 10/2/14

SLS #295 tr_100114_SLS 295 Haddon Hall Hotel – Clarification - Protection of Exits

APPROVED
MIAMI BEACH
FIRE DEPARTMENT

HADDON HALL
1500 COLLINS AVE
MIAMI BEACH, FL

KEYPLAN — N.T.S.

REVISIONS

NO.	DESCRIPTION	ISSUE DATE
10	MASTER PERMIT COMMENTS	07-03-2014
12	FIRE & MTCI PERMIT COMMENTS	08-21-2014
12a	FIRE PERMIT COMMENTS	09-29-2014

100% CONSTRUCTION DOCUMENT SET

NORTH — SEAL

10·9·14
Jonathan Cardello
Lic. # AR93391

ADD Inc — Architecture Interiors Planning

One Biscayne Tower
Suite 1670
Two South
Biscayne Boulevard
Miami, Fl 33131
T. 305.482.8700
F. 305.482.8770
www.addinc.com
Lic. # AA26001507

Boston Miami

M T C I
PRIVATE PROVIDER SERVICES, LLC
Construction Plans Review, Inspections, Testing & Consulting

	REVIEWER INITIALS	DATE REVIEWED
BUILDING	EM	11-10-14
STRUCTURAL		
MECHANICAL		
ELECTRICAL		
PLUMBING		

JOB NUMBER:	13036.00
CHECKED BY:	
ISSUE DATE:	FEBRUARY 18, 2014
SCALE:	AS NOTED

SHEET TITLE

FIRE SAFETY ALTERNATIVE METHOD APPROVAL

SHEET NUMBER

LS105

10 — NEW SHEET

COPYRIGHT ADD INC 2011

GENERAL DEMOLITION NOTES

1. NOTIFY THE ARCHITECT OF ANY UNEXPECTED FIELD CONDITION OR ANY DISCREPANCY BEFORE PROCEEDING. GC IS TO COORDINATE THE COMPLETE SCOPE OF WORK FOR DEMO WITH CONSTRUCTION DOCUMENTS.
2. NO MAIN FRAME OR STRUCTURAL MEMBERS ARE TO BE MODIFIED, ALTERED OR CUT WITHOUT THE APPROVAL OF THE ARCHITECT AND STRUCTURAL ENGINEER.
3. WHEN DEMOLISHING MATERIALS NEXT TO ABUTTING MATERIALS, CARE MUST BE TAKEN TO AVOID DAMAGING ELEMENTS TO REMAIN. G.C. WILL BE RESPONSIBLE FOR ALL REPAIRS.
4. PROVIDE STRICT CONTROL OF JOB CLEANING AND PREVENT DUST AND DEBRIS FROM EMANATING FROM DEMOLITION CONSTRUCTION AREA.
5. COORDINATE DEBRIS REMOVAL WITH OWNER. ALL DEBRIS REMOVAL MUST BE PREFORMED IN ACCORDANCE WITH BUILDING MANAGEMENT PROCEDURES AND DERM REQUIREMENTS.
6. FIRE ALARM DEVICES (SMOKE DETECTORS AND HORNS) WITHIN DEMO SPACE SHALL REMAIN CONNECTED TO EXISTING SYSTEMS. SECURE DEVICES AS NECESSARY TO KEEP FROM HANGING FREELY UPON REMOVAL OF WALLS AND CEILING.
7. DEMOLITION IS NOT NECESSARILY LIMITED TO WHAT IS SHOWN ON DRAWINGS. THE INTENT IS TO INDICATE THE GENERAL SCOPE OF DEMOLITION REQUIRED.
8. DISCONNECT AND MAKE SAFE ALL ELECTRICAL EQUIPMENT AND ASSOCIATED BOXES, DEVICES AND WIRING IDENTIFIED FOR REMOVAL.
9. RELOCATION OF ANY EQUIPMENT, CABLING SWITCHES, AND CONDUIT PERTAINING TO DATA/COMMUNICATIONS SHALL BE VERIFIED WITH TELEPHONE COMPANIES, SERVICES OWNER OR TENANT AS REQUIRED.
10. ALL STAIRWAYS MUST REMAIN ACCESSIBLE AT ALL TIMES DURING DEMOLITION PER 207 FBC 3310. PROVIDE TEMPORARY STAIRWAY FLOOR NUMBERS SIGNS PER 2007 FBC 3310.3.
11. IF APPLICABLE, ALL EXISTING FLOOR MOUNTED OUTLETS TO BE REMOVED SHALL BE CAPPED OFF TO THE NEAREST JUNCTION BOX. FILL AND LEVEL FLOOR ACCEPT NEW FLOOR COVERINGS.
12. THE CONTRACTOR SHALL INSPECT THE EXISTING FIELD CONDITIONS AT THE SITE PRIOR TO THE START OF ANY WORK TO DETERMINE WHAT EFFECT THTE EXISTING CONDITIONS WILL HAVE ON HIS WORK. POTENTIAL PROBLEM AREAS SHALL BE BROUGHT TO THE ATTN. OF THE ARCHITECT AND/OR ENGINEER IMMEDIATELY.
13. SHUTDOWN OF EXISTING SYSTEMS FOR CONNECTION TO EXISTING SERVICES SHALL BE COORDINATED WITH THE CONSTRUCTION MANAGER AND BUILDING OWNER. THE CONTRACTOR SHALL SUBMIT REQUESTS, WHERE THEY AFFECT THE OPERATION OF THE BUILDING SYSTEMS, AT LEAST ONE WEEK IN ADVANCE OF ANY REQUIRED SHUTDOWN. THE ACTUAL SHUTDOWN PERIOD SHALL BE AS SHORT AS POSSIBLE AND AT A TIME MUTUALLY AGREEABLE TO THE BUILDING OWNER AND THE CONSTRUCTION MANAGER.
14. REMOVE ALL MISCELLANEOUS UNUSED CLIPS, ANCHORS, ETC. FROM MASONRY, WALLS, COLUMNS, BEAMS, AND DECKS.
15. ~~PROVIDE PORTABLE FIRE EXTINGUISHERS IN ACCORDANCE TO FLORIDA~~ BUILDING CODE 2010, SECTION 3309.
16. THESE DEMOLITION DRAWINGS HAVE BEEN COMPILED FROM THE BEST AVAILABLE INFORMATION AND ARE NOT INTENDED TO LIMIT THE SCOPE OF THE WORK. IT WILL BE ASSUMED THAT THE CONTRACTOR HAS INSPECTED THE SITE PRIOR TO BIDDING AND VERIFIED THE INFORMATION HEREIN SUPPLIED.
17. INTENT IS TO REMOVE EVERYTHING NECESSARY TO ALLOW NEW CONSTRUCTION TO BE ACCOMPLISHED. SEE DRAWINGS SHOWING PROPOSED NEW CONSTRUCTION.
18. REMOVE AND LEGALLY DISPOSE OF THE FOLLOWING UNLESS OTHERWISE NOTED: ALL DEBRIS, CEILINGS, FURNITURE, FIXED OR REMOVABLE EQUIPMENT, PIPING, PLUMBING, CONDUIT, LOOSE FINISH MATERIALS, DOORS, FRAMES, WINDOWS, PARTITIONS AND STAIRS AS SHOWN ON DRAWINGS UNLESS OTHERWISE NOTED.
19. PRIOR TO CARRYING OUT DEMOLITION WORK, ALL EXISTING FRAMING MUST BE EXPOSED. ARCHITECT/ENGINEER SHALL BE IMMEDIATELY NOTIFIED FOR INSPECTION OF EXISTING CONDITIONS. REMOVAL OF EXISTING SUPPORTS FOR REMAINING FLOOR FRAMING WILL REQUIRE SHORING OF THESE MEMBERS AND ADDITION OF NEW BEAMS AND POSTS AS REQUIRED BY STRUCTURAL ENGINEER. GENERAL CONTRACTOR SHALL PROVIDE ALL NECESSARY SHORING AND WALL BRACING AND SHALL CARRY OUT ALL REVISIONS REQUIRED BY EXISTING FIELD CONDITIONS.
20. REMOVE ALL FLOOR AREAS AND STRUCTURE WHERE NOTED ON DRAWINGS. NO NEW MASONRY OPENINGS ARE TO BE MADE OR STRUCTURE REMOVED PRIOR TO NOTIFYING STRUCTURAL ENGINEER.
21. NO NEW MASONRY OPENINGS ARE TO BE MADE OR STRUCTURE REMOVED PRIOR TO NOTIFYING STRUCTURAL ENGINEER.
22. LOCATION OF NEW OPENINGS ARE SHOWN ON DRAWINGS.
23. WHERE CONCRETE OR MASONRY WORK IS REQUIRED TO BE CUT, CUTTING SHALL BE DONE BY ABRASIVE, WHEELS, SAWS, OR CORNING. NO JACKHAMMERS WILL BE ALLOWED ON THESE AREAS UNLESS APPROVED BY THE ARCHITECT.
24. ITEMS OF SALVAGEABLE VALUE TO CONTRACTOR MAY BE REMOVED FROM STRUCTURE AS WORK PROGRESSES. SALVAGED ITEMS MUST BE TRANSPORTED FROM SITE AS THEY ARE REMOVED.
25. ALL DEMOLITION TO BE PROPERLY DISPOSED OF, UNLESS OTHERWISE NOTED.
26. DO NOT CLOSE OR OBSTRUCT STREETS, WALKS, OR OTHER OCCUPIED OR USED FACILITIES WITHOUT PERMISSION FROM AUTHORITIES HAVING JURISDICTION. PROVIDE ALTERNATIVE ROUTES AROUND CLOSED OR OBSTRUCTED TRAFFIC WAYS IF REQUIRED BY GOVERNING REGULATIONS.
27. PROVIDE RAILS AND OTHER PROTECTIONS REQUIRED BY OSHA, THE STATE FLORIDA, AND THE FLORIDA BUILDING CODE 2010, SECTION 3303.2.
28. PROTECT EXISTING FINISHES, TRIM, AND FIXTURES TO REMAIN. I.E. WOOD AND TERRAZZO FLOORS, RUNNING TRIM DECK HANDRAILS, ETC.
29. ALL WORK NOTED TO BE REMOVED, CUT DOWN OR DISMANTLED SHALL BE DONE IN SUCH A MANNER AS TO MAINTAIN THE INTEGRITY OF THE EXISTING STRUCTURE.
30. THE DEMOLITION CONTRACTOR SHALL HAVE THE SOLE RESPONSIBILITY OF VERIFYING CONDITIONS AT THE JOB TO PROVIDE FOR A SAFE AND ORDERLY PERFORMANCE OF THE WORK.
31. UNDER NO CONDITION SHALL ANY EXISTING FOUNDATION BE UNDERMINED OR ANY STRUCTURAL MEMBER ALTERED IN ANY WAY THAT WILL ADVERSELY EFFECT THE EXISTING WORK TO REMAIN.
32. WORK UNDER THIS CONTRACT SHALL BE THE FULL RESPONSIBILITY FOR THE DEMOLITION CONTRACTOR; AND NO ACT, DIRECTION OR REVIEW OF ANY SYSTEM OR METHOD BY THE ARCHITECT OR HIS CONSULTANTS SHALL CHANGE OR EFFECT THE CONTRACTORS RESPONSIBILITY IN THIS MATTER.
33. STORE ITEMS TO BE RELOCATED AS SHOWN AND PROTECT FROM DAMAGE.
34. CAP IN ACCORDANCE WITH CODE ALL ABANDONED PLUMBING, GAS & ELECTRICAL LINES, ETC.
35. ALL WALLS AND CEILINGS TO BE STRIPPED BACK TO ROUGH FRAMING UNLESS OTHERWISE NOTED.
36. EXISTING HVAC TO REMAIN UNLESS OTHERWISE NOTED.
37. BUILDING WILL NOT BE OCCUPIED DURING DEMOLITION.
38. IF APPLICABLE, ANY ASBESTOS REMOVAL SHALL COMPLY WITH FLORIDA BUILDING CODE 2010, SECTION 105.9
39. PROVIDE SANITARY FACILITIES DURING CONSTRUCTION, REMODELING OR DEMOLITION IN ACCORDANCE TO FLORIDA BUILDING CODE 2010, SECTION 3305.1.
40. A MEANS OF EGRESS SHALL BE MAINTAINED AT ALL TIMES DURING CONSTRUCTION, DEMOLITION, REMODELING AND/OR ALTERATION IN ACCORDANCE TO FLORIDA BUILDING CODE 2010, SECTION 3310.2.
41. ASBESTOS REMOVAL DISCLOSURE STATEMENT: STATE LAW REQUIRES ASBESTOS ABATEMENT TO BE DONE BY LICENSED CONTRACTORS.

12 · 12a

DEMOLITION SHEET NOTES

1. EXISTING CONCRETE STAIRS TO BE DEMOLISHED IN THEIR ENTIRETY
2. INTERIOR PARTITIONS TO BE DEMOLISHED
3. SELECT DEMOLITION AT EXTERIOR CMU WALLS
4. CMU WALL TO BE DEMOLISHED IN ITS ENTIRETY
5. SELECT DEMOLITION OF INTERIOR AND EXTERIOR WALLS FOR NEW PROCEDURE
6. SELECT DEMOLITION OF FLOORING FOR NEW PROGRAM
7. FLOORING TO BE DEMOLISHED (INCLUDING AT CAMPTON INDOOR/OUTDOOR RESTAURANT AND AT CAMPTON KITCHEN; AREAS TO RECEIVE NEW STRUCTURE.
8. REMOVE EXISTING PLUMBING FIXTURES
9. EXISTING FLOOR MATERIAL TO BE DEMOLISHED IN SELECT AREA; NEW FLOOR TO BE INSTALLED AT NEW FLOOR ELEVATION
10. REMOVE EXISTING WINDOW AND FRAME PATCH AND PAINT TO MATCH EXISTING FINISH
11. EXISTING WOOD FRAMED FOOT BRIDGE TO BE DEMOLISHED IN ITS ENTIRETY
12. HARDSCAPE TO BE DEMOLISHED FOR NEW ENTRANCE DRIVE CONFIGURATION AND WALKWAY (SEE LANDSCAPE PLAN).
13. HARDSCAPE TO BE DEMOLISHED; TO BE REPLACED WITH LANDSCAPE (SEE LANDSCAPE PLAN)
14. HISTORIC FOUNTAIN LOCATION TO REMAIN; TO BE RESTORED
15. EXISTING ENTRANCE TO REMAIN; SELECT DEMOLITION REQUIRED AT ADJACENT LOCATION FOR MATCHING PILLAR.
16. EXISTING CONCRETE RAMP TO BE DEMOLISHED IN ITS ENTIRETY.
17. EXISTING RETAINING WALL TO BE REMOVED IN ITS ENTIRETY.
18. EXISTING DOOR AND FRAMES TO BE REMOVED.
18A. EXISTING HISTORIC DOORS AND FRAMES TO REMAIN; TO BE RESTORED INCLUD. NEW GLAZING, FINISH, AND HARDWARE.
19. ROOFING TO BE REMOVED AND REDONE
20. ROOF SYSTEM AND FRAMING TO BE DEMOLISHED.
21. CONCRETE STEPS TO BE REMOVED.
21A. EXISTING EXTERIOR ON-GRADE PAVING MATERIAL TO BE REMOVED THROUGHOUT FOR UG UTILITY INSTALLATION IN AREAS OF WORK.
22. CONCRETE STRUCTURE TO BE REMOVED IN ITS ENTIRETY.
23. CONCRETE CURB TO BE DEMOLISHED.
24. EXISTING CONCRETE DECORATIVE RAIL TO BE REMOVED, POSTS TO REMAIN.
25. EXISTING COPING TO BE REMOVED.
26. REMOVE CONCRETE POOL DECK TILES.
27. EXISTING METAL RAIL TO BE REMOVED.
28. EXISTING POOL SHOWER TO BE RECONFIGURED
29. EXISTING WALL TO REMAIN IN ITS ENTIRETY.
30. POLE SIGN TO BE RESTORED.
31. EXISTING OVERHANG TO REMAIN
32. REMOVE EXISTING CHAIN-FENCING AND BARBED WIRE
33. REMOVE EXISTING THRU-WALL A/C UNIT. PATCH AND PAINT TO MATCH EXISTING FINISH
34. REMOVE EXISTING GLASS BLOCK PANELS.
35. REMOVE EXISTING WINDOW BARS, PATCH AND PAINT TO MATCH EXISTING.
36. REMOVE EXISTING WHEELS STOPS.
37. REMOVE EXISTING PAVING.
38. REMOVE & REROUTE EXISTING EXPOSED ELECTRICAL CONDUIT.
39. REMOVE EXISTING TV ANTENA
40. REMOVE EXISTING CONCRETE BALUSTRADE
41. CONCRETE POST TO REMAIN
42. REMOVE EXISTING MOSAIC TILES AT SOUTH PUMP ROOM WALL – POOLSIDE
43. DEMO PREP FOR PROPOSED BOULDERS. REFER TO SHEET A101.
44. RELOCATE EXISTING VENTILATION GRILL AT GUESTROOM
45. BATHROOMS IF CONFLICTS WITH NEW DROPPED CEILING. REMOVE EXISTING METAL RAILING
46. EXISTING RAMP TO REMAIN. HAND RAILS TO BE REPLACED AND BROUGHT UP TO CODE
47. REMOVE ALL EXISTING EXTERIOR STAIRWELL HANDRAILS AT CAMPTON APTS.; TO BE REPLACED WITH NEW CODE COMPLIANT
48. REMOVE WOOD DECK AND WOOD JOIST

REPLACEMENT & RESTORATION NOTES

- ALL BUILDING EXTERIORS TO BE RESTORED AND REPAINTED
- ALL EXISTING A/C WINDOW UNIT BOXES ARE TO BE REMOVED; WALLS TO BE BLOCKED UP, PATCHED, AND PAINTED
- EXISTING EXTERIOR DOORS AND WINDOWS TO BE REMOVED AND REPLACED WITH NEW TO MEET HURRICANE CODE REQUIREMENTS.
- ALL NEW WINDOWS IN HISTORIC BUILDINGS (HADDON HALL AND CAMPTON APARTMENTS) TO BE REPLACED TO MATCH HISTORIC MULLION PATTERN.
- ALL EXISTING WINDOW BARS TO BE REMOVED
- ALL EXTERIOR ELECTRICAL CONDUIT AND METERS TO BE INTERNALIZED AND RELOCATED OFF OF BUILDING FACADE WALLS AND OUT OF PUBLIC/GUEST AREAS, ETC., TYP.
- WHERE BATHROOM FINISHES ARE NOTED TO BE REMOVED AND REPLACED, CAUTION IS TO BE TAKEN. FLOOR STRUCTURE TO BE REPAIRED PER EXISTING CONDITION DISCOVERY AND DAMAGE DURING DEMOLITION. INFILL FLOOR WITH CEMENTITIOUS BACKER BOARD. SUBSTRATE WITH NEW CERAMIC TILE.
- REPAIR/REPLACE DAMAGED WOOD DECKING AT CAMPTON AND HADDON AS DETECTED DURING NEW ROOF WORK.
- REPAIR/REPLACE DAMAGED WOOD FLOORING AT ALL AREAS OF WORK.

1

LEGEND

- PARTITION TO BE DEMOLISHED
- EXISTING PARTITION TO REMAIN
- EXISTING BLOCK WALL TO REMAIN
- NEW PARTITION
- N.I.C. SHADING
- EXISTING STRUCTURE
- EXISTING DOOR TO REMAIN
- DOOR TO BE REMOVED
- KEYNOTE INDICATOR
- EXISTING OUTLET – VOICE/DATA
- EXISTING SWITCH
- EXISTING POWER OUTLET
- EXISTING VOICE/DATA OUTLET
- EXISTING THERMOSTAT
- EXISTING FIRE STROBE
- EXISTING FIRE EXTINGUISHER CABINET
- RELOCATED THERMOSTAT
- NEW POWER OUTLET
- RELOCATED SWITCH

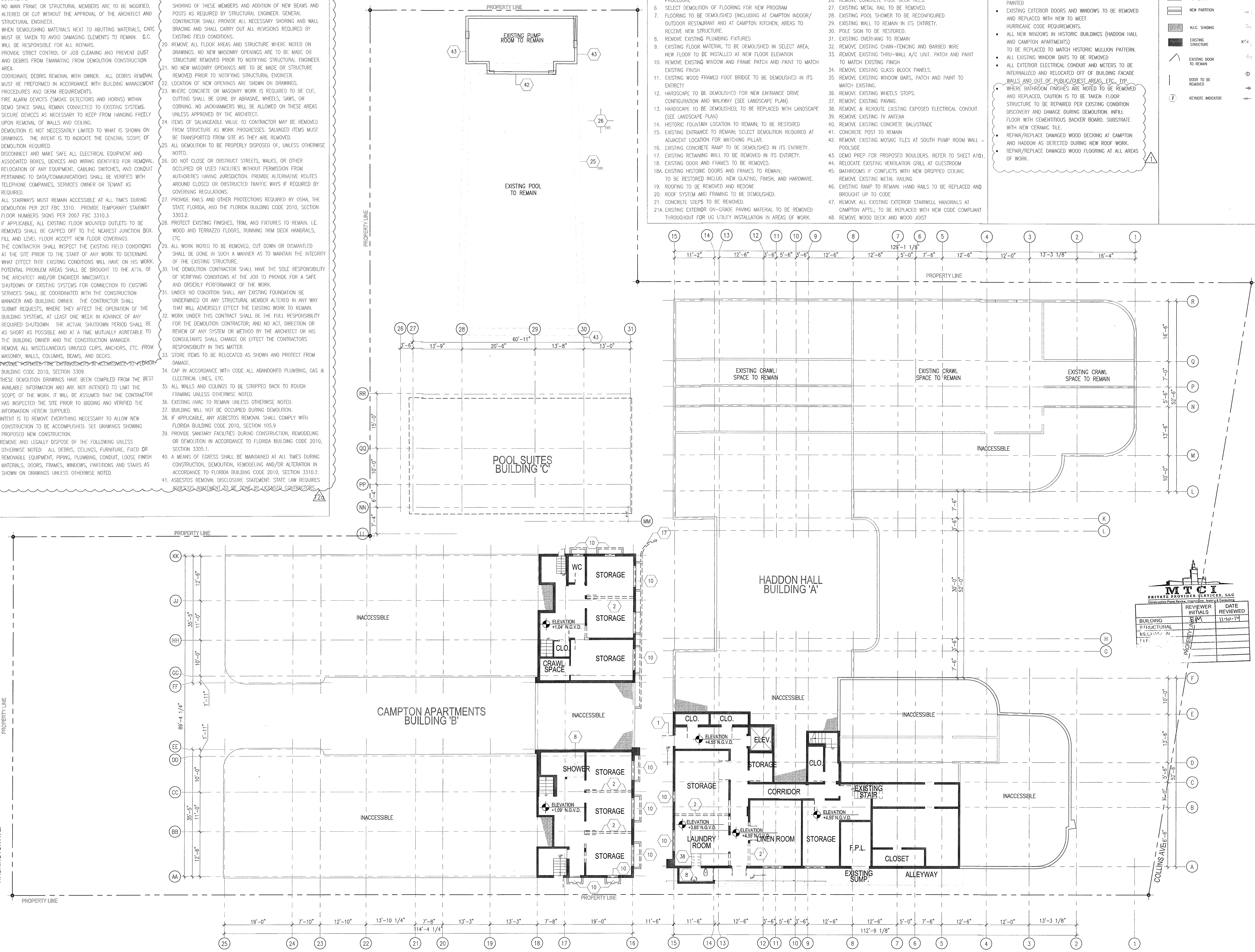

1 BASEMENT LEVEL DEMOLITION PLAN
SCALE: 3/32" = 1'-0"

MTCI PRIVATE PROVIDER SERVICES, LLC
Construction Plans Review, Inspections, Testing & Consulting

	REVIEWER INITIALS	DATE REVIEWED
BUILDING	EM	11-10-14
STRUCTURAL		
MECHANICAL		
ELE...		

APPROVED MIAMI BEACH FIRE DEPARTMENT

HADDON HALL
1500 COLLINS AVE
MIAMI BEACH, FL

KEYPLAN N.T.S.

REVISIONS

NO.	DESCRIPTION	ISSUE DATE
1	PROGRESS TO 100% CD	02-18-2014
12	FIRE & MTCI PERMIT COMMENTS	08-21-2014
12a	FIRE PERMIT COMMENTS	09-29-2014

100% CONSTRUCTION DOCUMENT SET

NORTH SEAL

10·9·14
Jonathan Cardello
Lic. # AR93391

ADD Inc Architecture Interiors Planning

One Biscayne Tower
Suite 1670
Two South
Biscayne Boulevard
Miami, Fl 33131
T. 305.482.8700
F. 305.482.8770
www.addinc.com
Lic. # AA26001507

Boston Miami

JOB NUMBER: 13036.00
CHECKED BY:
ISSUE DATE: FEBRUARY 18, 2014
SCALE: 3/32" = 1'-0"

SHEET TITLE

BASEMENT LEVEL DEMOLITION PLAN

SHEET NUMBER

AD100

COPYRIGHT ADD INC 2011

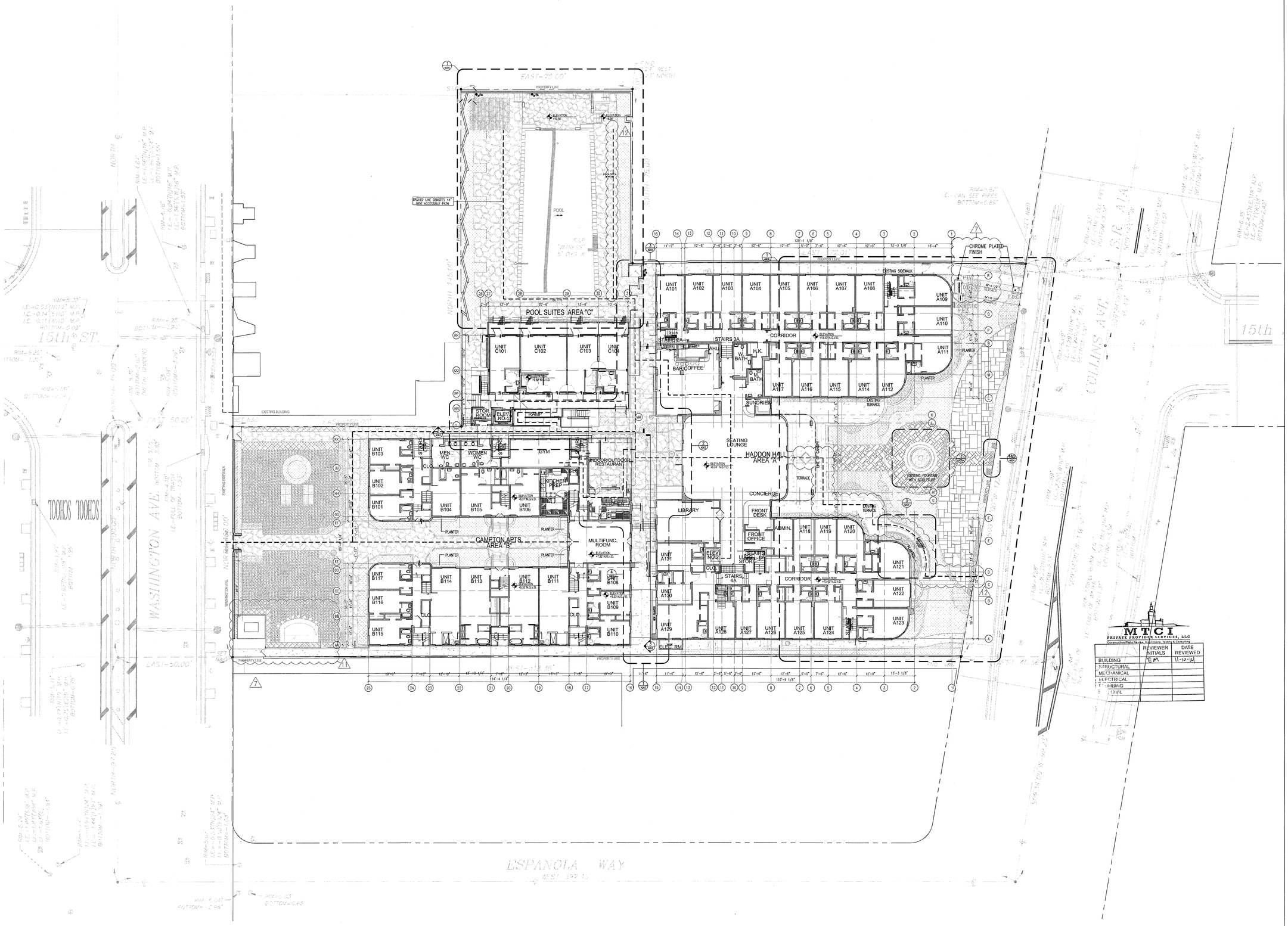

1 ARCHITECTURAL SITE PLAN
SCALE: 1/16" = 1'-0"

HADDON HALL
1500 COLLINS AVE

MIAMI BEACH, FL

KEYPLAN N.T.S.

REVISIONS

NO.	DESCRIPTION	ISSUE DATE
7	POOL SUITES WALLS	04-04-2014
1	P&Z COMMENTS	07-14-2014
1A	FIRE & MTCI PERMIT COMMENTS	08-01-2014

100% CONSTRUCTION DOCUMENT SET

NORTH SEAL

9.2.14
Jonathan Cardello
Lic. # AR93391

MTCI
PRIVATE PROVIDER SERVICES, LLC
Construction Plans Review, Inspection, Training & Consulting

	REVIEWER INITIALS	DATE REVIEWED
BUILDING	EM	11-10-14
STRUCTURAL		
MECHANICAL		
ELECTRICAL		
PLUMBING		
CIVIL		

ADD Inc Architecture Interiors Planning

One Biscayne Tower
Suite 1670
Two South
Biscayne Boulevard
Miami, Fl 33131
T. 305.482.8700
F. 305.482.8770
www.addinc.com
Lic. # AA26001507

Boston Miami

JOB NUMBER:	13036.00
CHECKED BY:	
ISSUE DATE:	FEBRUARY 18, 2014
SCALE:	1/16" = 1'-0"

SHEET TITLE

ARCHITECTURAL SITE PLAN

SHEET NUMBER

A001

COPYRIGHT ADD INC 2011

APPROVED MIAMI BEACH FIRE DEPARTMENT

GENERAL NOTES

1. NOTIFY THE ARCHITECT OF ANY UNEXPECTED FIELD CONDITION OR ANY DISCREPANCY BEFORE PROCEEDING. GENERAL CONTRACTOR IS TO COORDINATE THE COMPLETE SCOPE OF WORK WITH CONSTRUCTION DOCUMENTS.
2. PROVIDE TEMPORARY SECURE ACCESS TO SPACE THROUGH CONSTRUCTION AND TEMPORARY LIGHT & POWER.
3. PROVIDE STRICT CONTROL OF JOB CLEANING AND PREVENT DUST AND DEBRIS FROM EMANATING FROM CONSTRUCTION AREA. GENERAL CONTRACTOR SHALL MAINTAIN THE PREMISES CLEAN AND FREE OF TRASH AND DEBRIS DURING CONSTRUCTION.
4. CAP AND SHUT OFF ALL UNUSED UTILITIES PER CITY AND STATE REQUIREMENTS, WHERE REQUIRED.
5. PROVIDE TEMPORARY FIRE / SAFETY DEVICES THROUGHOUT CONSTRUCTION. SECURE DEVICES AS NECESSARY.
6. PROTECT ALL BASE BUILDING SERVICES, TYPICAL.
7. ALL REQUIREMENTS FOR FIRE RATINGS TO BE MAINTAINED DURING CONSTRUCTION.
8. THIS PROJECT INVOLVES CONSTRUCTION INSIDE AN EXISTING STRUCTURE. CONTRACTORS, BY SUBMITTING A BID, ARE DEEMED TO BE COMPLETELY FAMILIAR WITH THE EXISTING CONDITION OF THE BUILDING AS IT INFLUENCES THE WORK DESCRIBED. ABSOLUTELY NO CLAIMS FOR EXTRA COMPENSATION WILL BE CONSIDERED FOR EXISTING CONDITIONS VISIBLE OR REASONABLY INFERABLE FROM A CAREFUL EXAMINATION OF THE EXISTING BLDG.
9. THE CONTRACTOR SHALL INSPECT THE EXISTING FIELD CONDITIONS AT THE SITE PRIOR TO THE START OF ANY WORK TO DETERMINE WHAT EFFECT THE EXISTING CONDITIONS WILL HAVE ON THEIR WORK. POTENTIAL PROBLEM AREAS SHALL BE BROUGHT TO THE ATTN. OF THE ARCHITECT AND/OR ENGINEER IMMEDIATELY.
10. SHUTDOWN OF EXISTING SYSTEMS FOR CONNECTION TO EXISTING SERVICES SHALL BE COORDINATED WITH THE CONSTRUCTION MANAGER AND BUILDING OWNER. THE CONTRACTOR SHALL SUBMIT REQUESTS, WHERE THEY AFFECT THE OPERATION OF THE BUILDING SYSTEMS, AT LEAST ONE WEEK IN ADVANCE OF ANY REQUIRED SHUTDOWN. THE ACTUAL SHUTDOWN PERIOD SHALL BE AS SHORT AS POSSIBLE AND AT A TIME MUTUALLY AGREEABLE TO THE BUILDING OWNER AND THE CONSTRUCTION MANAGER.
11. ELECTRICAL DEVICES SHALL BE TERMINATED IN A SAFE AND PROPER METHOD BY A LICENSED PROFESSIONAL.
12. ALL WORK SHALL CONFORM WITH ALL APPLICABLE CITY, STATE, AND FEDERAL CODES AND REGULATIONS.
13. ARCHITECT TO REVIEW WALL LAYOUTS PRIOR TO CONSTRUCTION.
14. EXTREME CARE SHALL BE EXERCISED IN CUTTING, DRILLING, ANCHORING, ETC. TO THE EXISTING STRUCTURE. IF ANY DETERIORATION, OR DAMAGE TO THE EXISTING STRUCTURE OCCURS DURING CONSTRUCTION, IT SHALL BE PROMPTLY BROUGHT TO THE ATTENTION OF THE ARCHITECT.
15. REFER TO ENGINEERING DRAWINGS FOR ALL POWER, DATA, MECHANICAL, PLUMBING, & SECURITY REQUIREMENTS, LOCATIONS, AND SPECIFICATIONS. GENERAL CONTRACTOR TO COORDINATE WITH ARCHITECTURAL DOCUMENTS, AND TO NOTIFY ARCHITECT OF ANY DISCREPANCIES / CONFLICTS.
16. REFER TO STRUCTURAL DRAWINGS FOR ALL SLAB THICKNESS AND REQUIREMENTS, REINFORCEMENT, PENETRATIONS, AND STRUCTURAL SPECIFICATIONS. GENERAL CONTRACTOR TO COORDINATE WITH ARCHITECTURAL DOCUMENTS, AND TO NOTIFY ARCHITECT OF ANY DISCREPANCIES / CONFLICTS.
17. ANY NECESSARY FIRE EXTINGUISHERS ARE TO BE LOCATED IN RECESSED CABINETS WITH DOORS. COORDINATE LOCATIONS WITH ARCHITECT.
18. ALL EXISTING EXPOSED CMU BLOCK / CONCRETE AREAS (WALLS AND FLOORS) TO BE PATCHED, FILLED, AND SKIM COATED WITH NEW ANTI-CRACKING SUBSTRATE, AND SEALED.
19. ALL BATHROOMS AND WET AREAS TO RECEIVE 5/8" DUROCK ON WALLS AND CEILING.
20. RESTAURANT LINE RIGERS TO RUN IN CHASE 2 HR RATED OFF CHASE FIRECARTO/SMOKESTOPPING AT FLOOR PENETRATIONS.

SHEET NOTES

A. WALL MOUNTED TOILET TO AVOID CONFLICTS WITH RATED SPACES BELOW
B. TRASH ROOM TO BE AIR CONDITIONED
C. LIFT UNDER SEPARATE PERMIT
D. ALL INTERIOR FINISHES TO COMPLY WITH FBC CHAPTER 8. SEE G-010, SECTION F FOR DETAILS.
E. ALL WOOD USED THROUGHOUT SHALL BE INHERENTLY FIRE RETARDANT
F. ALL EXIT ROOM ENTRY DOORS AND CORRIDOR DOORS TO BE 1 HOUR RATED

LEGEND

EXISTING PARTITION TO REMAIN
NEW PARTITION
NEW CMU PARTITION
A.I.C. SHAVING
EXISTING STRUCTURE
CMU CEILING/SOFFIT
EXISTING DOOR TO REMAIN
DOOR NUMBER
NEW DOOR
ELEVATION REFERENCE
DETAIL REFERENCE
HOSE BIB
F.S. FLOOR SINK
FD.-FLOOR DRAIN
W.-WASTE OUTLET
TD - TRENCH DRAIN
LEVEL CHANGE

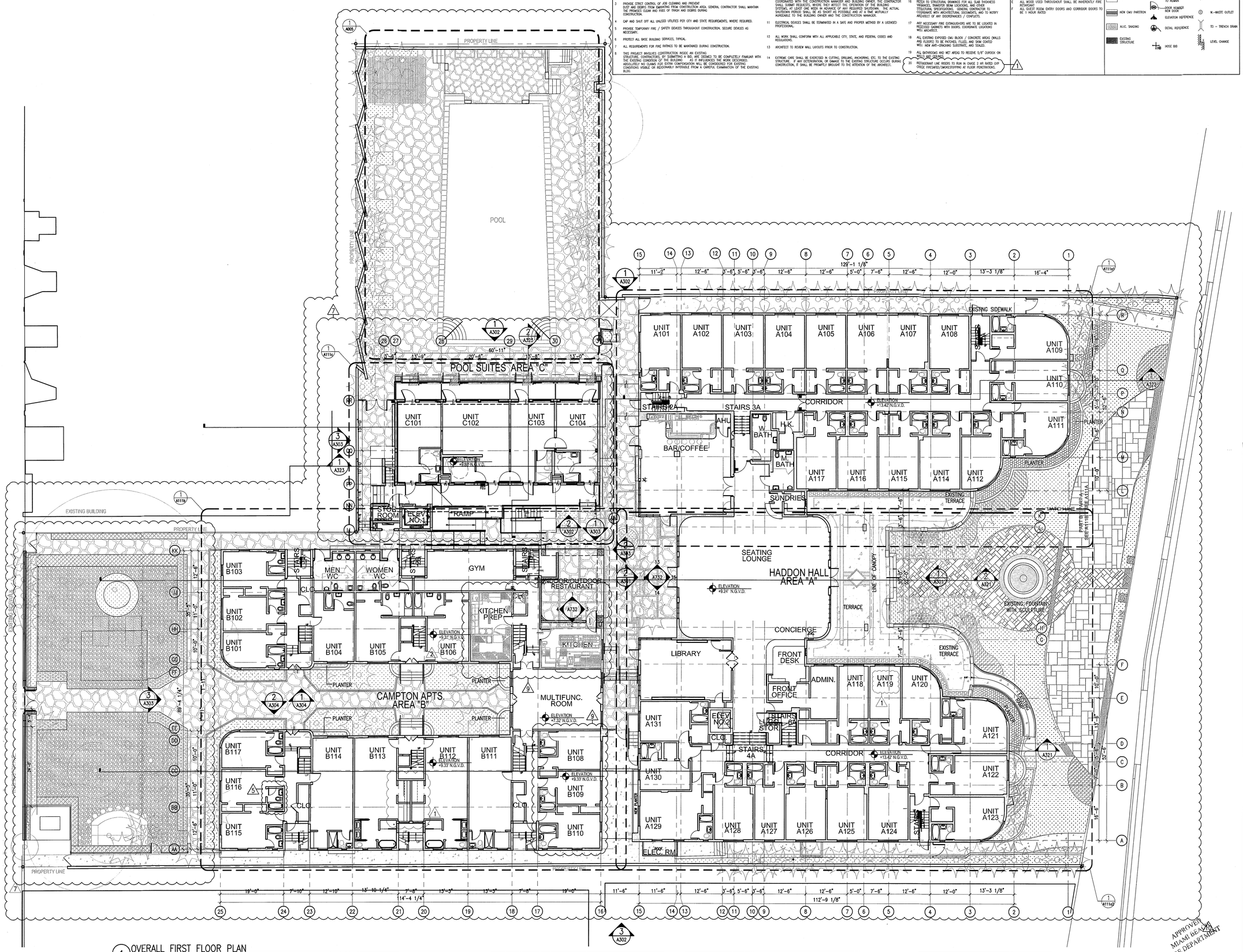

1 OVERALL FIRST FLOOR PLAN
SCALE: 3/32" = 1'-0"

APPROVED MIAMI BEACH FIRE DEPARTMENT

HADDON HALL
1500 COLLINS AVE
MIAMI BEACH, FL

KEYPLAN N.T.S.

REVISIONS

NO.	DESCRIPTION	ISSUE DATE
1	PROGRESS TO 100% CD	02-18-2014
2	PERMIT REVIEW COMMENTS	03-14-2014
5	GUESTROOM COORDINATION	04-17-2014
7	POOL SUITES WALLS	04-14-2014
9	KITCHEN REINFORCEMENT	05-30-2014
10	MASTER PERMIT COMMENTS	07-03-2014

MTCI
PRIVATE PROVIDER SERVICES, LLC
Construction Plans Review, Inspections, Testing & Consulting

	REVIEWER INITIALS	DATE REVIEWED
BUILDING	EM	11-10-14
STRUCTURAL		
MECHANICAL		
ELECTRICAL		
PLUMBING		
SITE CIVIL		

100% CONSTRUCTION DOCUMENT SET

NORTH

SEAL
Jonathan Cardello
Lic. # AR93391

ADD Inc Architecture Interiors Planning

One Biscayne Tower
Suite 1670
Two South
Biscayne Boulevard
Miami, Fl 33131
T. 305.482.8700
F. 305.482.8770
www.addinc.com
Lic. # AA26001507

Boston Miami

JOB NUMBER: 13036.00
CHECKED BY:
ISSUE DATE: FEBRUARY 18, 2014
SCALE: 3/32" = 1'-0"

SHEET TITLE

OVERALL FIRST FLOOR PLAN

SHEET NUMBER

A101

COPYRIGHT ADD INC 2011

DEMOLITION SHEET NOTES

1. EXISTING CONCRETE STAIRS TO BE DEMOLISHED IN THEIR ENTIRETY
2. INTERIOR PARTITIONS TO BE DEMOLISHED
3. SELECT DEMOLITION AT EXTERIOR CMU WALLS
4. CMU WALL TO BE DEMOLISHED IN ITS ENTIRETY
5. SELECT DEMOLITION OF INTERIOR AND EXTERIOR WALLS FOR NEW PROCEDURE
6. SELECT DEMOLITION OF FLOORING FOR NEW PROGRAM
7. FLOORING TO BE DEMOLISHED (INCLUDING AT CAMPTON INDOOR/ OUTDOOR RESTAURANT AND AT CAMPTON KITCHEN; AREAS TO RECEIVE NEW STRUCTURE.
8. REMOVE EXISTING PLUMBING FIXTURES
9. EXISTING FLOOR MATERIAL TO BE DEMOLISHED IN SELECT AREA; NEW FLOOR TO BE INSTALLED AT NEW FLOOR ELEVATION
10. REMOVE EXISTING WINDOW AND FRAME PATCH AND PAINT TO MATCH EXISTING FINISH
11. EXISTING WOOD FRAMED FOOT BRIDGE TO BE DEMOLISHED IN ITS ENTIRETY
12. HARDSCAPE TO BE DEMOLISHED FOR NEW ENTRANCE DRIVE CONFIGURATION AND WALKWAY (SEE LANDSCAPE PLAN).
13. HARDSCAPE TO BE DEMOLISHED; TO BE REPLACED WITH LANDSCAPE (SEE LANDSCAPE PLAN)
14. HISTORIC FOUNTAIN LOCATION TO REMAIN; TO BE RESTORED
15. EXISTING ENTRANCE TO REMAIN; SELECT DEMOLITION REQUIRED AT ADJACENT LOCATION FOR MATCHING PILLAR.
16. EXISTING CONCRETE RAMP TO BE DEMOLISHED IN ITS ENTIRETY.
17. EXISTING RETAINING WALL TO BE REMOVED IN ITS ENTIRETY.
18. EXISTING DOOR AND FRAMES TO BE REMOVED.

18A. EXISTING HISTORIC DOORS AND FRAMES TO REMAIN; TO BE RESTORED INCLUD. NEW GLAZING, FINISH, AND HARDWARE.

19. ROOFING TO BE REMOVED AND REDONE
20. ROOF SYSTEM AND FRAMING TO BE DEMOLISHED.
21. CONCRETE STEPS TO BE REMOVED.

21A. EXISTING EXTERIOR ON-GRADE PAVING MATERIAL TO BE REMOVED THROUGHOUT FOR UG UTILITY INSTALLATION IN AREAS OF WORK.

22. CONCRETE STRUCTURE TO BE REMOVED IN ITS ENTIRETY.
23. CONCRETE CURB TO BE DEMOLISHED.
24. EXISTING CONCRETE DECORATIVE RAIL TO BE REMOVED, POSTS TO REMAIN.
25. EXISTING COPING TO BE REMOVED.
26. REMOVE CONCRETE POOL DECK TILES.
27. EXISTING METAL RAIL TO BE REMOVED.
28. EXISTING POOL SHOWER TO BE RECONFIGURED
29. EXISTING WALL TO REMAIN IN ITS ENTIRETY.
30. POLE SIGN TO BE RESTORED.
31. EXISTING OVERHANG TO REMAIN
32. REMOVE EXISTING CHAIN-FENCING AND BARBED WIRE
33. REMOVE EXISTING THRU-WALL A/C UNIT. PATCH AND PAINT TO MATCH EXISTING FINISH
34. REMOVE EXISTING GLASS BLOCK PANELS.
35. REMOVE EXISTING WINDOW BARS, PATCH AND PAINT TO MATCH EXISTING.
36. REMOVE EXISTING WHEELS STOPS.
37. REMOVE EXISTING PAVING.
38. REMOVE & REROUTE EXISTING EXPOSED ELECTRICAL CONDUIT.
39. REMOVE EXISTING TV ANTENA
40. REMOVE EXISTING CONCRETE BALUSTRADE
41. CONCRETE POST TO REMAIN
42. REMOVE EXISTING MOSAIC TILES AT SOUTH PUMP ROOM WALL – POOLSIDE
43. DEMO PREP FOR PROPOSED BOULDERS. REFER TO SHEET A101.
44. RELOCATE EXISTING VENTILATION GRILL AT GUESTROOM
45. BATHROOMS IF CONFLICTS WITH NEW DROPPED CEILING. REMOVE EXISTING METAL RAILING
46. EXISTING RAMP TO REMAIN. HAND RAILS TO BE REPLACED AND BROUGHT UP TO CODE
47. REMOVE ALL EXISTING EXTERIOR STAIRWELL HANDRAILS AT CAMPTON APTS.; TO BE REPLACED WITH NEW CODE COMPLIANT
48. REMOVE WOOD DECK AND WOOD JOIST

REPLACEMENT & RESTORATION NOTES

- ALL BUILDING EXTERIORS TO BE RESTORED AND REPAINTED
- ALL EXISTING A/C WINDOW UNIT BOXES ARE TO BE REMOVED; WALLS TO BE BLOCKED UP, PATCHED, AND PAINTED
- EXISTING EXTERIOR DOORS AND WINDOWS TO BE REMOVED AND REPLACED WITH NEW TO MEET HURRICANE CODE REQUIREMENTS.
- ALL NEW WINDOWS IN HISTORIC BUILDINGS (HADDON HALL AND CAMPTON APARTMENTS) TO BE REPLACED TO MATCH HISTORIC MULLION PATTERN.
- ALL EXISTING WINDOW BARS TO BE REMOVED
- ALL EXTERIOR ELECTRICAL CONDUIT AND METERS TO BE INTERNALIZED AND RELOCATED OFF OF BUILDING FACADE WALLS AND OUT OF PUBLIC/GUEST AREAS, ETC., TYP.
- WHERE BATHROOM FINISHES ARE NOTED TO BE REMOVED AND REPLACED, CAUTION IS TO BE TAKEN. FLOOR STRUCTURE TO BE REPAIRED PER EXISTING CONDITION DISCOVERY AND DAMAGE DURING DEMOLITION. INFILL FLOOR WITH CEMENTITIOUS BACKER BOARD. SUBSTRATE WITH NEW CERAMIC TILE.
- REPAIR/REPLACE DAMAGED WOOD DECKING AT CAMPTON AND HADDON AS DETECTED DURING NEW ROOF WORK.
- REPAIR/REPLACE DAMAGED WOOD FLOORING AT ALL AREAS OF WORK.

1

LEGEND

PARTITION TO BE DEMOLISHED	EXISTING OUTLET – VOICE/DATA
EXISTING PARTITION TO REMAIN	EXISTING SWITCH
EXISTING BLOCK WALL TO REMAIN	EXISTING POWER OUTLET
NEW PARTITION	EXISTING VOICE/DATA OUTLET
N.I.C. SHADING	EXISTING THERMOSTAT
EXISTING STRUCTURE	EXISTING FIRE STROBE
EXISTING DOOR TO REMAIN	EXISTING FIRE EXTINGUISHER CABINET
DOOR TO BE REMOVED	RELOCATED THERMOSTAT
KEYNOTE INDICATOR	NEW POWER OUTLET
	RELOCATED SWITCH

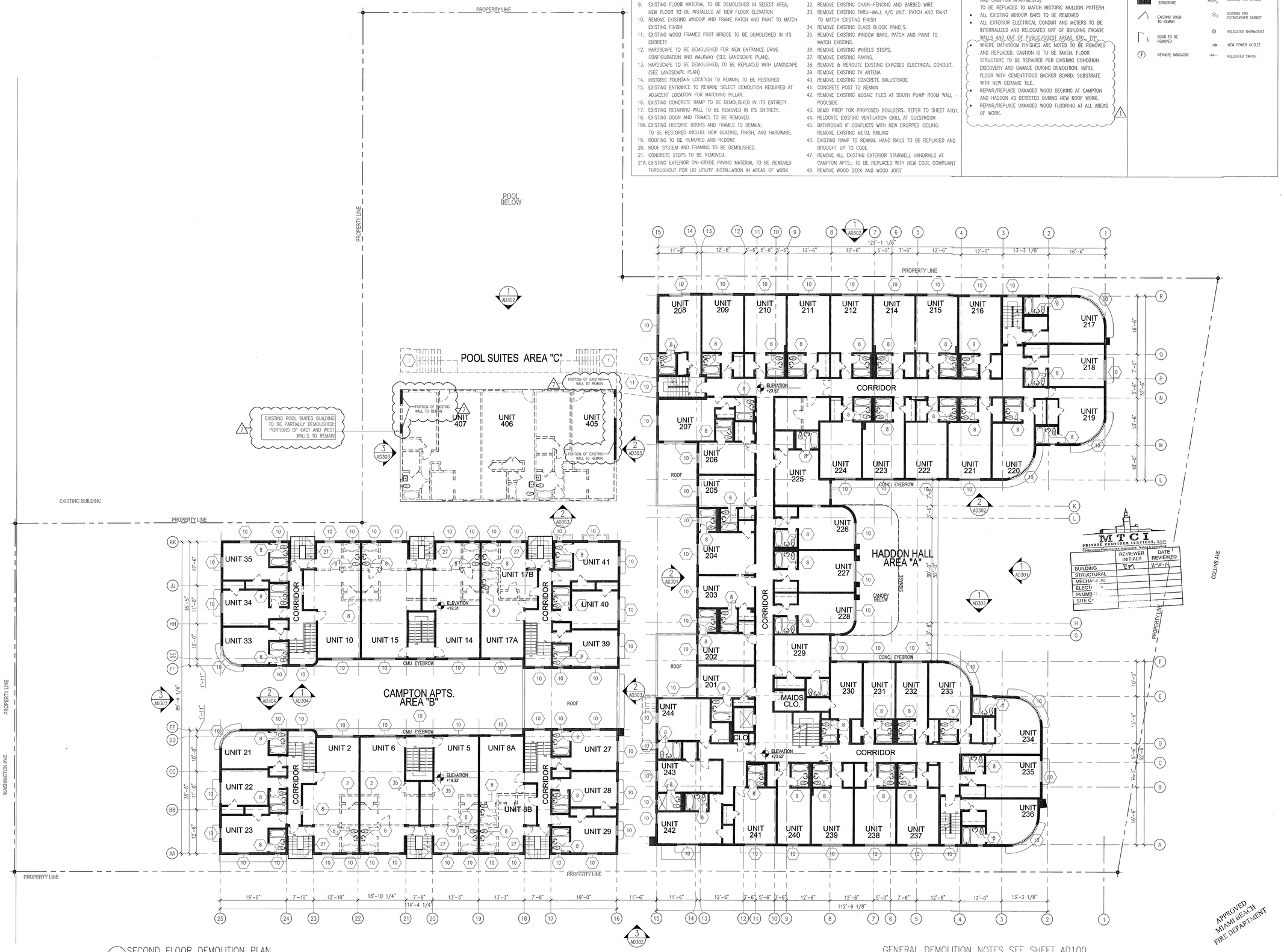

1 SECOND FLOOR DEMOLITION PLAN
SCALE: 3/32" = 1'-0"

GENERAL DEMOLITION NOTES SEE SHEET AD100

HADDON HALL
1500 COLLINS AVE

MIAMI BEACH, FL

KEYPLAN N.T.S.

REVISIONS

NO.	DESCRIPTION	ISSUE DATE
1	PROGRESS TO 100% CD	02-18-2014
2	POOL SUITES WALLS	04-04-2014

100% CONSTRUCTION DOCUMENT SET

NORTH SEAL

Jonathan Cardelo
Lic. # AR93391

ADD Inc Architecture Interiors Planning

One Biscayne Tower
Suite 1670
Two South
Biscayne Boulevard
Miami, Fl.33131
T. 305.482.8700
F. 305.482.8770
www.addinc.com
Lic. # AA26001507

Boston Miami

JOB NUMBER: 13036.00
CHECKED BY:
ISSUE DATE: FEBRUARY 18, 2014
SCALE: 3/32" = 1'-0"

SHEET TITLE

SECOND FLOOR DEMOLITION PLAN

SHEET NUMBER

AD102

COPYRIGHT ADD INC 2011

DEMOLITION SHEET NOTES

1. EXISTING CONCRETE STAIRS TO BE DEMOLISHED IN THEIR ENTIRETY
2. INTERIOR PARTITIONS TO BE DEMOLISHED
3. SELECT DEMOLITION AT EXTERIOR CMU WALLS
4. CMU WALL TO BE DEMOLISHED IN ITS ENTIRETY
5. SELECT DEMOLITION OF INTERIOR AND EXTERIOR WALLS FOR NEW PROCEDURE
6. SELECT DEMOLITION OF FLOORING FOR NEW PROGRAM
7. FLOORING TO BE DEMOLISHED (INCLUDING AT CAMPTON INDOOR/ OUTDOOR RESTAURANT AND AT CAMPTON KITCHEN; AREAS TO RECEIVE NEW STRUCTURE.
8. REMOVE EXISTING PLUMBING FIXTURES
9. EXISTING FLOOR MATERIAL TO BE DEMOLISHED IN SELECT AREA; NEW FLOOR TO BE INSTALLED AT NEW FLOOR ELEVATION
10. REMOVE EXISTING WINDOW AND FRAME PATCH AND PAINT TO MATCH EXISTING FINISH
11. EXISTING WOOD FRAMED FOOT BRIDGE TO BE DEMOLISHED IN ITS ENTIRETY
12. HARDSCAPE TO BE DEMOLISHED FOR NEW ENTRANCE DRIVE CONFIGURATION AND WALKWAY (SEE LANDSCAPE PLAN).
13. HARDSCAPE TO BE DEMOLISHED; TO BE REPLACED WITH LANDSCAPE (SEE LANDSCAPE PLAN)
14. HISTORIC FOUNTAIN LOCATION TO REMAIN; TO BE RESTORED
15. EXISTING ENTRANCE TO REMAIN; SELECT DEMOLITION REQUIRED AT ADJACENT LOCATION FOR MATCHING PILLAR.
16. EXISTING CONCRETE RAMP TO BE DEMOLISHED IN ITS ENTIRETY.
17. EXISTING RETAINING WALL TO BE REMOVED IN ITS ENTIRETY.
18. EXISTING DOOR AND FRAMES TO BE REMOVED.

18A. EXISTING HISTORIC DOORS AND FRAMES TO REMAIN; TO BE RESTORED INCLUD. NEW GLAZING, FINISH, AND HARDWARE.

19. ROOFING TO BE REMOVED AND REDONE
20. ROOF SYSTEM AND FRAMING TO BE DEMOLISHED.
21. CONCRETE STEPS TO BE REMOVED.

21A. EXISTING EXTERIOR ON-GRADE PAVING MATERIAL TO BE REMOVED THROUGHOUT FOR UG UTILITY INSTALLATION IN AREAS OF WORK.

22. CONCRETE STRUCTURE TO BE REMOVED IN ITS ENTIRETY.
23. CONCRETE CURB TO BE DEMOLISHED.
24. EXISTING CONCRETE DECORATIVE RAIL TO BE REMOVED, POSTS TO REMAIN.
25. EXISTING COPING TO BE REMOVED.
26. REMOVE CONCRETE POOL DECK TILES.
27. EXISTING METAL RAIL TO BE REMOVED.
28. EXISTING POOL SHOWER TO BE RECONFIGURED
29. EXISTING WALL TO REMAIN IN ITS ENTIRETY.
30. POLE SIGN TO BE RESTORED.
31. EXISTING OVERHANG TO REMAIN
32. REMOVE EXISTING CHAIN-FENCING AND BARBED WIRE
33. REMOVE EXISTING THRU-WALL A/C UNIT. PATCH AND PAINT TO MATCH EXISTING FINISH
34. REMOVE EXISTING GLASS BLOCK PANELS.
35. REMOVE EXISTING WINDOW BARS, PATCH AND PAINT TO MATCH EXISTING.
36. REMOVE EXISTING WHEELS STOPS.
37. REMOVE EXISTING PAVING.
38. REMOVE & REROUTE EXISTING EXPOSED ELECTRICAL CONDUIT.
39. REMOVE EXISTING TV ANTENA
40. REMOVE EXISTING CONCRETE BALUSTRADE
41. CONCRETE POST TO REMAIN
42. REMOVE EXISTING MOSAIC TILES AT SOUTH PUMP ROOM WALL – POOLSIDE
43. DEMO PREP FOR PROPOSED BOULDERS. REFER TO SHEET A1.1.
44. RELOCATE EXISTING VENTILATION GRILL AT GUESTROOM
45. BATHROOMS IF CONFLICTS WITH NEW DROPPED CEILING. REMOVE EXISTING METAL RAILING
46. EXISTING RAMP TO REMAIN. HAND RAILS TO BE REPLACED AND BROUGHT UP TO CODE
47. REMOVE ALL EXISTING EXTERIOR STAIRWELL HANDRAILS AT CAMPTON APTS.; TO BE REPLACED WITH NEW CODE COMPLIANT
48. REMOVE WOOD DECK AND WOOD JOIST

REPLACEMENT & RESTORATION NOTES

- ALL BUILDING EXTERIORS TO BE RESTORED AND REPAINTED
- ALL EXISTING A/C WINDOW UNIT BOXES ARE TO BE REMOVED; WALLS TO BE BLOCKED UP, PATCHED, AND PAINTED
- EXISTING EXTERIOR DOORS AND WINDOWS TO BE REMOVED AND REPLACED WITH NEW TO MEET HURRICANE CODE REQUIREMENTS.
- ALL NEW WINDOWS IN HISTORIC BUILDINGS (HADDON HALL AND CAMPTON APARTMENTS) TO BE REPLACED TO MATCH HISTORIC MULLION PATTERN.
- ALL EXISTING WINDOW BARS TO BE REMOVED
- ALL EXTERIOR ELECTRICAL CONDUIT AND METERS TO BE INTERNALIZED AND RELOCATED OFF OF BUILDING FACADE WALLS AND OUT OF PUBLIC/GUEST AREAS, ETC., TYP.
- WHERE BATHROOM FINISHES ARE NOTED TO BE REMOVED AND REPLACED, CAUTION IS TO BE TAKEN. FLOOR STRUCTURE TO BE REPAIRED PER EXISTING CONDITION DISCOVERY AND DAMAGE DURING DEMOLITION. INFILL FLOOR WITH CEMENTITIOUS BACKER BOARD. SUBSTRATE WITH NEW CERAMIC TILE.
- REPAIR/REPLACE DAMAGED WOOD DECKING AT CAMPTON AND HADDON AS DETECTED DURING NEW ROOF WORK.
- REPAIR/REPLACE DAMAGED WOOD FLOORING AT ALL AREAS OF WORK.

1

LEGEND

PARTITION TO BE DEMOLISHED	EXISTING OUTLET – VOICE/DATA
EXISTING PARTITION TO REMAIN	EXISTING SWITCH
EXISTING BLOCK WALL TO REMAIN	EXISTING POWER OUTLET
NEW PARTITION	EXISTING VOICE/DATA OUTLET
N.I.C. SHADING	EXISTING THERMOSTAT
EXISTING STRUCTURE	EXISTING FIRE STROBE
EXISTING DOOR TO REMAIN	EXISTING FIRE EXTINGUISHER CABINET
DOOR TO BE REMOVED	RELOCATED THERMOSTAT
	NEW POWER OUTLET
KEYNOTE INDICATOR	RELOCATED SWITCH

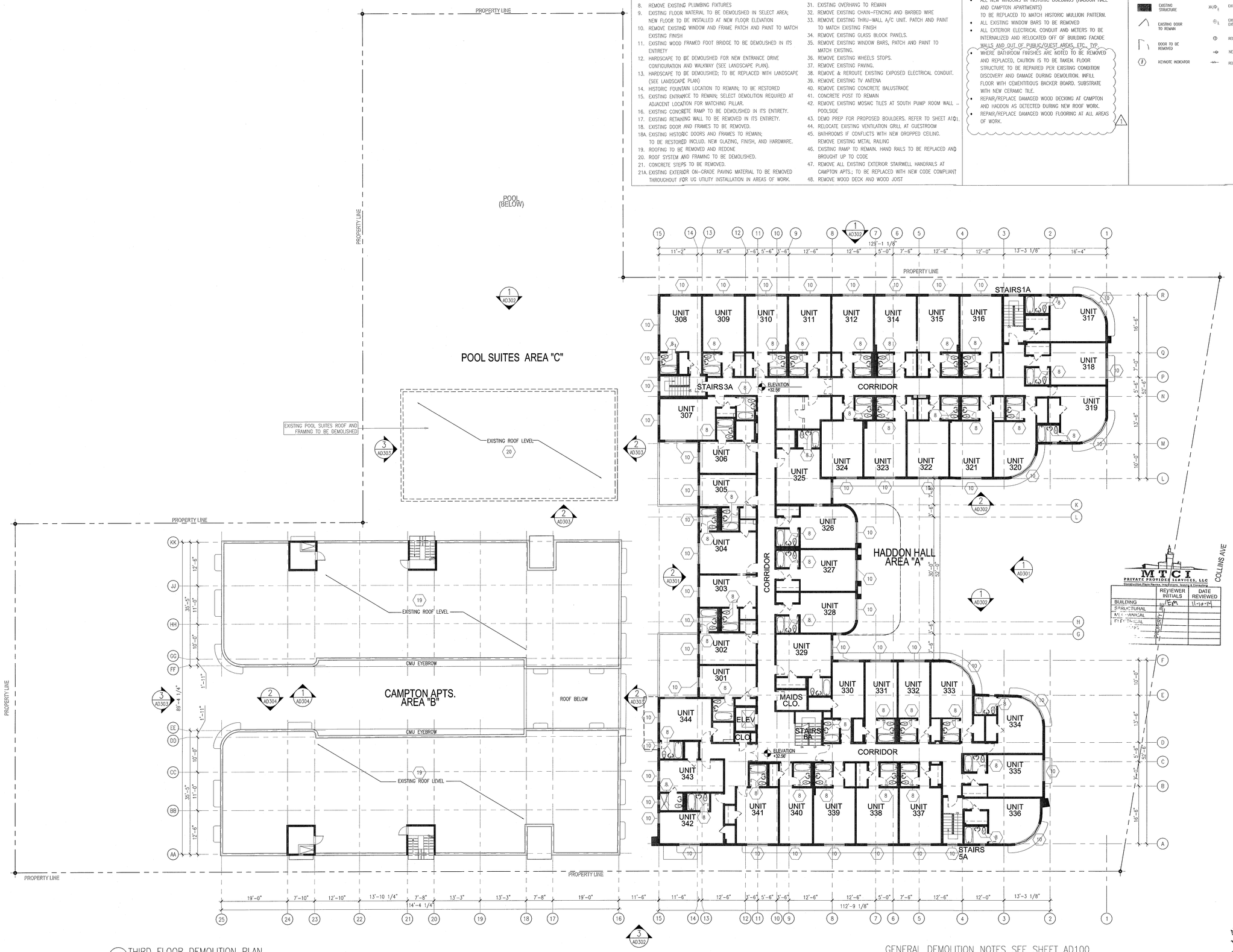

1 THIRD FLOOR DEMOLITION PLAN
SCALE: 3/32" = 1'-0"

GENERAL DEMOLITION NOTES SEE SHEET AD100

APPROVED MIAMI BEACH FIRE DEPARTMENT

HADDON HALL
1500 COLLINS AVE

MIAMI BEACH, FL

KEYPLAN N.T.S.

REVISIONS

NO.	DESCRIPTION	ISSUE DATE
1	PROGRESS TO 100% CD	02-18-2014

100% CONSTRUCTION DOCUMENT SET

NORTH

SEAL

5-22-14
Jonathan Cardello
Lic. # AR93391

ADD Inc Architecture Interiors Planning

One Biscayne Tower
Suite 1670
Two South
Biscayne Boulevard
Miami, Fl 33131
T. 305.482.8700
F. 305.482.8770
www.addinc.com
Lic. # AA26001507

Boston Miami

JOB NUMBER:	13036.00
CHECKED BY:	
ISSUE DATE:	FEBRUARY 18, 2014
SCALE:	3/32" = 1'-0"

SHEET TITLE

THIRD FLOOR DEMOLITION PLAN

SHEET NUMBER

AD103

COPYRIGHT ADD INC 2011

DEMOLITION SHEET NOTES

1. EXISTING CONCRETE STAIRS TO BE DEMOLISHED IN THEIR ENTIRETY
2. INTERIOR PARTITIONS TO BE DEMOLISHED
3. SELECT DEMOLITION AT EXTERIOR CMU WALLS
4. CMU WALL TO BE DEMOLISHED IN ITS ENTIRETY
5. SELECT DEMOLITION OF INTERIOR AND EXTERIOR WALLS FOR NEW PROCEDURE
6. SELECT DEMOLITION OF FLOORING FOR NEW PROGRAM
7. FLOORING TO BE DEMOLISHED (INCLUDING AT CAMPTON INDOOR/ OUTDOOR RESTAURANT AND AT CAMPTON KITCHEN; AREAS TO RECEIVE NEW STRUCTURE.
8. REMOVE EXISTING PLUMBING FIXTURES
9. EXISTING FLOOR MATERIAL TO BE DEMOLISHED IN SELECT AREA; NEW FLOOR TO BE INSTALLED AT NEW FLOOR ELEVATION
10. REMOVE EXISTING WINDOW AND FRAME PATCH AND PAINT TO MATCH EXISTING FINISH
11. EXISTING WOOD FRAMED FOOT BRIDGE TO BE DEMOLISHED IN ITS ENTIRETY
12. HARDSCAPE TO BE DEMOLISHED FOR NEW ENTRANCE DRIVE CONFIGURATION AND WALKWAY (SEE LANDSCAPE PLAN).
13. HARDSCAPE TO BE DEMOLISHED; TO BE REPLACED WITH LANDSCAPE (SEE LANDSCAPE PLAN)
14. HISTORIC FOUNTAIN LOCATION TO REMAIN; TO BE RESTORED
15. EXISTING ENTRANCE TO REMAIN; SELECT DEMOLITION REQUIRED AT ADJACENT LOCATION FOR MATCHING PILLAR.
16. EXISTING CONCRETE RAMP TO BE DEMOLISHED IN ITS ENTIRETY.
17. EXISTING RETAINING WALL TO BE REMOVED IN ITS ENTIRETY.
18. EXISTING DOOR AND FRAMES TO BE REMOVED.

18A. EXISTING HISTORIC DOORS AND FRAMES TO REMAIN; TO BE RESTORED INCLUD. NEW GLAZING, FINISH, AND HARDWARE.

19. ROOFING TO BE REMOVED AND REDONE
20. ROOF SYSTEM AND FRAMING TO BE DEMOLISHED.
21. CONCRETE STEPS TO BE REMOVED.

21A. EXISTING EXTERIOR ON-GRADE PAVING MATERIAL TO BE REMOVED THROUGHOUT FOR UG UTILITY INSTALLATION IN AREAS OF WORK.

22. CONCRETE STRUCTURE TO BE REMOVED IN ITS ENTIRETY.
23. CONCRETE CURB TO BE DEMOLISHED.
24. EXISTING CONCRETE DECORATIVE RAIL TO BE REMOVED, POSTS TO REMAIN.
25. EXISTING COPING TO BE REMOVED.
26. REMOVE CONCRETE POOL DECK TILES.
27. EXISTING METAL RAIL TO BE REMOVED.
28. EXISTING POOL SHOWER TO BE RECONFIGURED
29. EXISTING WALL TO REMAIN IN ITS ENTIRETY.
30. POLE SIGN TO BE RESTORED.
31. EXISITNG OVERHANG TO REMAIN
32. REMOVE EXISTING CHAIN-FENCING AND BARBED WIRE
33. REMOVE EXISTING THRU-WALL A/C UNIT. PATCH AND PAINT TO MATCH EXISTING FINISH
34. REMOVE EXISTING GLASS BLOCK PANELS.
35. REMOVE EXISTING WINDOW BARS, PATCH AND PAINT TO MATCH EXISTING.
36. REMOVE EXISTING WHEELS STOPS.
37. REMOVE EXISTING PAVING.
38. REMOVE & REROUTE EXISTING EXPOSED ELECTRICAL CONDUIT.
39. REMOVE EXISTING TV ANTENA
40. REMOVE EXISTING CONCRETE BALUSTRADE
41. CONCRETE POST TO REMAIN
42. REMOVE EXISTING MOSAIC TILES AT SOUTH PUMP ROOM WALL - POOLSIDE
43. DEMO PREP FOR PROPOSED BOULDERS. REFER TO SHEET A101.
44. RELOCATE EXISTING VENTILATION GRILL AT GUESTROOM
45. BATHROOMS IF CONFLICTS WITH NEW DROPPED CEILING. REMOVE EXISITNG METAL RAILING
46. EXISTING RAMP TO REMAIN. HAND RAILS TO BE REPLACED AND BROUGHT UP TO CODE
47. REMOVE ALL EXISTING EXTERIOR STAIRWELL HANDRAILS AT CAMPTON APTS.; TO BE REPLACED WITH NEW CODE COMPLIANT
48. REMOVE WOOD DECK AND WOOD JOIST

REPLACEMENT & RESTORATION NOTES

- ALL BUILDING EXTERIORS TO BE RESTORED AND REPAINTED
- ALL EXISTING A/C WINDOW UNIT BOXES ARE TO BE REMOVED; WALLS TO BE BLOCKED UP, PATCHED, AND PAINTED
- EXISTING EXTERIOR DOORS AND WINDOWS TO BE REMOVED AND REPLACED WITH NEW TO MEET HURRICANE CODE REQUIREMENTS.
- ALL NEW WINDOWS IN HISTORIC BUILDINGS (HADDON HALL AND CAMPTON APARTMENTS) TO BE REPLACED TO MATCH HISTORIC MULLION PATTERN.
- ALL EXISTING WINDOW BARS TO BE REMOVED
- ALL EXTERIOR ELECTRICAL CONDUIT AND METERS TO BE INTERNALIZED AND RELOCATED OFF OF BUILDING FACADE WALLS AND OUT OF PUBLIC/GUEST AREAS, ETC., TYP.
- WHERE BATHROOM FINISHES ARE NOTED TO BE REMOVED AND REPLACED, CAUTION IS TO BE TAKEN. FLOOR STRUCTURE TO BE REPAIRED PER EXISTING CONDITION DISCOVERY AND DAMAGE DURING DEMOLITION. INFILL FLOOR WITH CEMENTITIOUS BACKER BOARD. SUBSTRATE WITH NEW CERAMIC TILE.
- REPAIR/REPLACE DAMAGED WOOD DECKING AT CAMPTON AND HADDON AS DETECTED DURING NEW ROOF WORK.
- REPAIR/REPLACE DAMAGED WOOD FLOORING AT ALL AREAS OF WORK.

1

LEGEND

	PARTITION TO BE DEMOLISHED		EXISTING OUTLET - VOICE/DATA
	EXISTING PARTITION TO REMAIN		EXISTING SWITCH
	EXISTING BLOCK WALL TO REMAIN		EXISTING POWER OUTLET
	NEW PARTITION		EXISTING VOICE/DATA OUTLET
	N.I.C. SHADING		EXISTING THERMOSTAT
	EXISTING STRUCTURE		EXISTING FIRE STROBE
	EXISTING DOOR TO REMAIN		EXISTING FIRE EXTINGUISHER CABINET
	DOOR TO BE REMOVED		RELOCATED THERMOSTAT
			NEW POWER OUTLET
	KEYNOTE INDICATOR		RELOCATED SWITCH

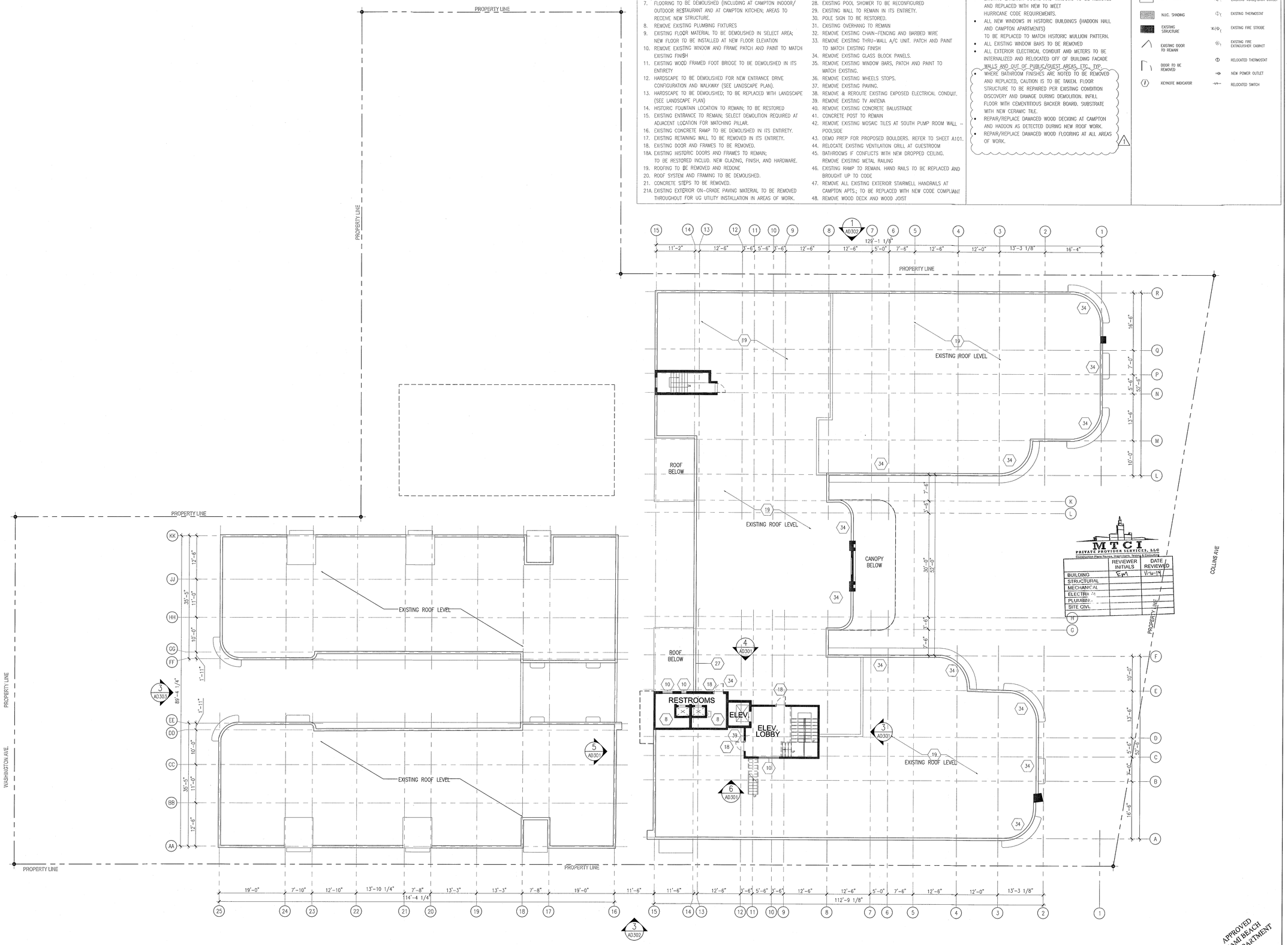

1 ROOF DECK DEMOLITION PLAN
SCALE: 3/32" = 1'-0"

GENERAL DEMOLITION NOTES SEE SHEET AD100

APPROVED MIAMI BEACH FIRE DEPARTMENT

HADDON HALL
1500 COLLINS AVE
MIAMI BEACH, FL

KEYPLAN N.T.S.

REVISIONS

NO.	DESCRIPTION	ISSUE DATE

100% CONSTRUCTION DOCUMENT SET

NORTH SEAL

5-22-14
Jonathan Cardello
Lic. # AR93391

ADD Inc Architecture Interiors Planning

One Biscayne Tower
Suite 1670
Two South
Biscayne Boulevard
Miami, Fl 33131
T. 305.482.8700
F. 305.482.8770
www.addinc.com
Lic. # AA26001507

Boston Miami

JOB NUMBER:	13036.00
CHECKED BY:	
ISSUE DATE:	FEBRUARY 18, 2014
SCALE:	3/32" = 1'-0"

SHEET TITLE

ROOF DECK DEMOLITION PLAN

SHEET NUMBER

AD104

COPYRIGHT ADD INC 2011

GENERAL DEMOLITION NOTES SEE SHEET AD100

DEMOLITION SHEET NOTES

1. EXISTING CONCRETE STAIRS TO BE DEMOLISHED IN THEIR ENTIRETY
2. INTERIOR PARTITIONS TO BE DEMOLISHED
3. SELECT DEMOLITION AT EXTERIOR CMU WALLS
4. CMU WALL TO BE DEMOLISHED IN ITS ENTIRETY
5. SELECT DEMOLITION OF INTERIOR AND EXTERIOR WALLS FOR NEW PROCEDURE.
6. SELECT DEMOLITION OF FLOORING FOR NEW PROGRAM
7. FLOORING TO BE DEMOLISHED (INCLUDING AT CAMPTON INDOOR/ OUTDOOR RESTAURANT AND AT CAMPTON KITCHEN; AREAS TO RECEIVE NEW STRUCTURE.
8. REMOVE EXISTING PLUMBING FIXTURES
9. EXISTING FLOOR MATERIAL TO BE DEMOLISHED IN SELECT AREA; NEW FLOOR TO BE INSTALLED AT NEW FLOOR ELEVATION
10. REMOVE EXISTING WINDOW AND FRAME PATCH AND PAINT TO MATCH EXISTING FINISH
11. EXISTING WOOD FRAMED FOOT BRIDGE TO BE DEMOLISHED IN ITS ENTIRETY
12. HARDSCAPE TO BE DEMOLISHED FOR NEW ENTRANCE DRIVE CONFIGURATION AND WALKWAY (SEE LANDSCAPE PLAN).
13. HARDSCAPE TO BE DEMOLISHED; TO BE REPLACED WITH LANDSCAPE (SEE LANDSCAPE PLAN)
14. HISTORIC FOUNTAIN LOCATION TO REMAIN; TO BE RESTORED
15. EXISTING ENTRANCE TO REMAIN; SELECT DEMOLITION REQUIRED AT ADJACENT LOCATION FOR MATCHING PILLAR.
16. EXISTING CONCRETE RAMP TO BE DEMOLISHED IN ITS ENTIRETY.
17. EXISTING RETAINING WALL TO BE REMOVED IN ITS ENTIRETY.
18. EXISTING DOOR AND FRAMES TO BE REMOVED.

18A. EXISTING HISTORIC DOORS AND FRAMES TO REMAIN; TO BE RESTORED INCLUD. NEW GLAZING, FINISH, AND HARDWARE.

19. ROOFING TO BE REMOVED AND REDONE
20. ROOF SYSTEM AND FRAMING TO BE DEMOLISHED.
21. CONCRETE STEPS TO BE REMOVED.

21A. EXISTING EXTERIOR ON-GRADE PAVING MATERIAL TO BE REMOVED THROUGHOUT FOR UG UTILITY INSTALLATION IN AREAS OF WORK.

22. CONCRETE STRUCTURE TO BE REMOVED IN ITS ENTIRETY.
23. CONCRETE CURB TO BE DEMOLISHED.
24. EXISTING CONCRETE DECORATIVE RAIL TO BE REMOVED, POSTS TO REMAIN.
25. EXISTING COPING TO BE REMOVED.
26. REMOVE CONCRETE POOL DECK TILES.
27. EXISTING METAL RAIL TO BE REMOVED.
28. EXISTING POOL SHOWER TO BE RECONFIGURED
29. EXISTING WALL TO REMAIN IN ITS ENTIRETY.
30. POLE SIGN TO BE RESTORED.
31. EXISTING OVERHANG TO REMAIN
32. REMOVE EXISTING CHAIN-FENCING AND BARBED WIRE
33. REMOVE EXISTING THRU-WALL A/C UNIT. PATCH AND PAINT TO MATCH EXISTING FINISH
34. REMOVE EXISTING GLASS BLOCK PANELS.
35. REMOVE EXISTING WINDOW BARS, PATCH AND PAINT TO MATCH EXISTING.
36. REMOVE EXISTING WHEELS STOPS.
37. REMOVE EXISTING PAVING.
38. REMOVE & REROUTE EXISTING EXPOSED ELECTRICAL CONDUIT.
39. REMOVE EXISTING TV ANTENA
40. REMOVE EXISTING CONCRETE BALUSTRADE
41. CONCRETE POST TO REMAIN
42. REMOVE EXISTING MOSAIC TILES AT SOUTH PUMP ROOM WALL - POOLSIDE
43. DEMO PREP FOR PROPOSED BOULDERS. REFER TO SHEET A101.
44. RELOCATE EXISTING VENTILATION GRILL AT GUESTROOM
45. BATHROOMS IF CONFLICTS WITH NEW DROPPED CEILING. REMOVE EXISTING METAL RAILING
46. EXISTING RAMP TO REMAIN. HAND RAILS TO BE REPLACED AND BROUGHT UP TO CODE
47. REMOVE ALL EXISTING EXTERIOR STAIRWELL HANDRAILS AT CAMPTON APTS.; TO BE REPLACED WITH NEW CODE COMPLIANT
48. REMOVE WOOD DECK AND WOOD JOIST

- ALL BUILDING EXTERIORS TO BE RESTORED AND REPAINTED
- ALL EXISTING A/C WINDOW UNIT BOXES ARE TO BE REMOVED; WALLS TO BE BLOCKED UP, PATCHED, AND PAINTED
- EXISTING EXTERIOR DOORS AND WINDOWS TO BE REMOVED AND REPLACED WITH NEW TO MEET HURRICANE CODE REQUIREMENTS.
- ALL NEW WINDOWS IN HISTORIC BUILDINGS (HADDON HALL AND CAMPTON APARTMENTS) TO BE REPLACED TO MATCH HISTORIC MULLION PATTERN.
- ALL EXISTING WINDOW BARS TO BE REMOVED
- ALL EXTERIOR ELECTRICAL CONDUIT AND METERS TO BE INTERNALIZED AND RELOCATED OFF OF BUILDING FACADE WALLS AND OUT OF PUBLIC/GUEST AREAS, ETC., TYP.
- WHERE BATHROOM FINISHES ARE NOTED TO BE REMOVED AND REPLACED, CAUTION IS TO BE TAKEN. FLOOR STRUCTURE TO BE REPAIRED PER EXISTING CONDITION DISCOVERY AND DAMAGE DURING DEMOLITION. INFILL FLOOR WITH CEMENTITIOUS BACKER BOARD. SUBSTRATE WITH NEW CERAMIC TILE.
- REPAIR/REPLACE DAMAGED WOOD DECKING AT CAMPTON AND HADDON AS DETECTED DURING NEW ROOF WORK.
- REPAIR/REPLACE DAMAGED WOOD FLOORING AT ALL AREAS OF WORK.

1

PARTITION TO BE DEMOLISHED	EXISTING OUTLET - VOICE/DATA
EXISTING PARTITION TO REMAIN	EXISTING SWITCH
EXISTING BLOCK WALL TO REMAIN	EXISTING POWER OUTLET
NEW PARTITION	EXISTING VOICE/DATA OUTLET
N.L.C. SHADING	EXISTING THERMOSTAT
EXISTING STRUCTURE	EXISTING FIRE STROBE
EXISTING DOOR TO REMAIN	EXISTING FIRE EXTINGUISHER CABINET
DOOR TO BE REMOVED	RELOCATED THERMOSTAT
	NEW POWER OUTLET
KEYNOTE INDICATOR	RELOCATED SWITCH

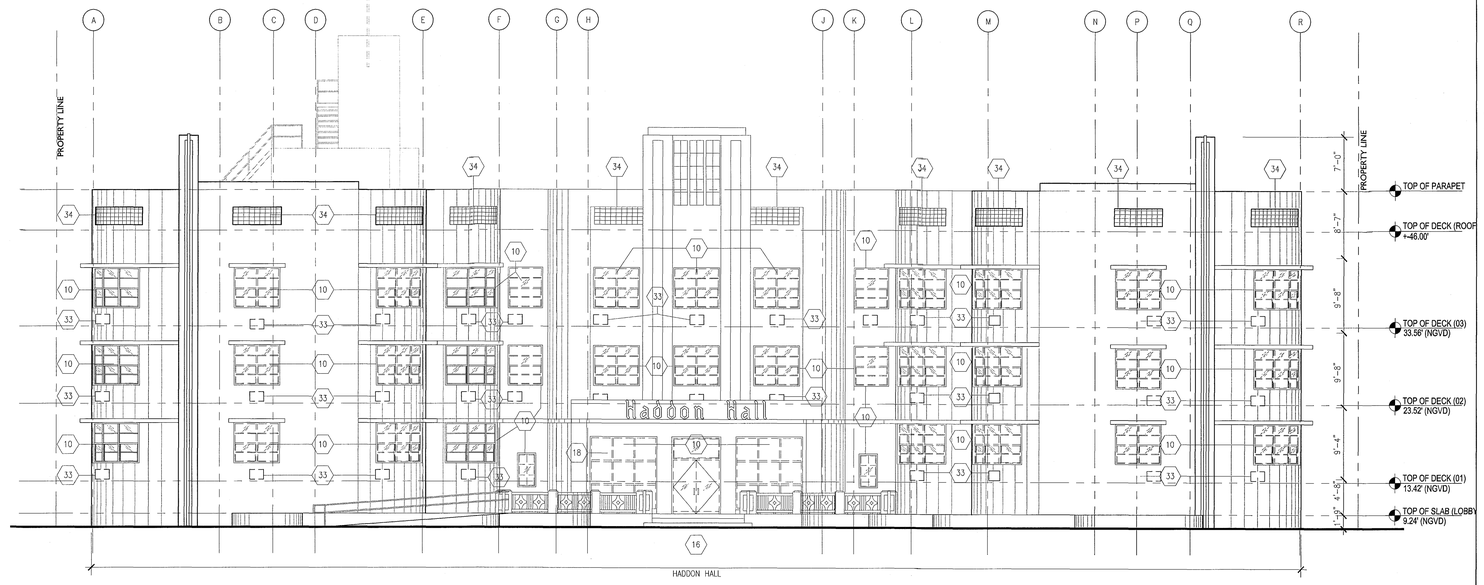

1 EXTERIOR EAST ELEVATION HADDON HALL
SCALE: 1/8" = 1'-0"

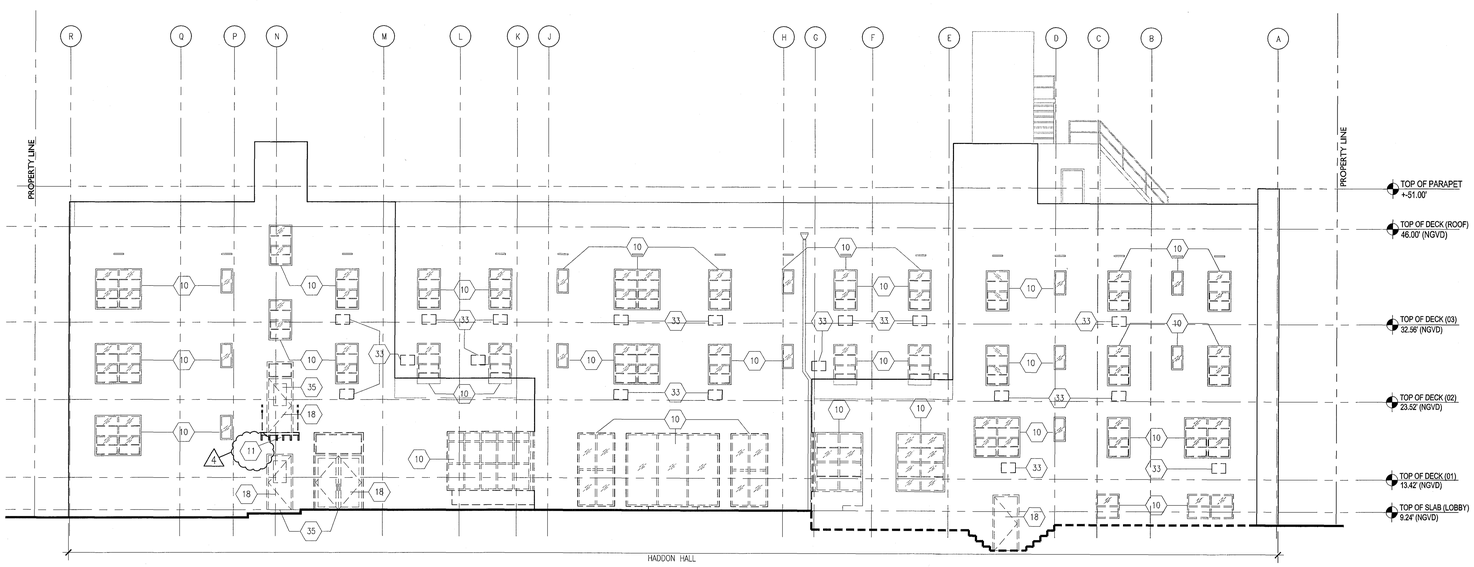

2 EXTERIOR WEST ELEVATION HADDON HALL
SCALE: 1/8" = 1'-0"

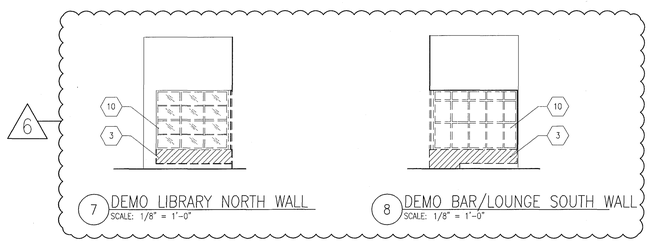

7 DEMO LIBRARY NORTH WALL
SCALE: 1/8" = 1'-0"

8 DEMO BAR/LOUNGE SOUTH WALL
SCALE: 1/8" = 1'-0"

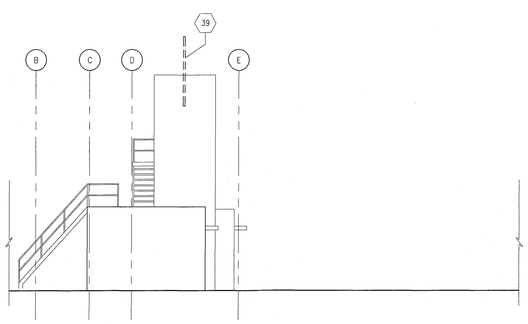

3 EXTERIOR EAST ELEVATION HADDON HALL ROOFTOP (EXISTING)
SCALE: 1/8" = 1'-0"

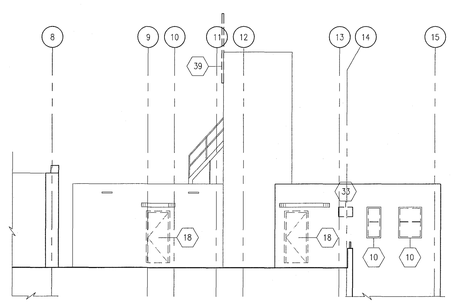

4 EXTERIOR NORTH ELEVATION HADDON HALL ROOFTOP (EXISTING)
SCALE: 1/8" = 1'-0"

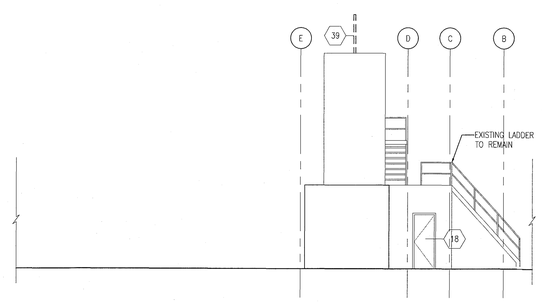

5 EXTERIOR WEST ELEVATION HADDON HALL ROOFTOP (EXISTING)
SCALE: 1/8" = 1'-0"

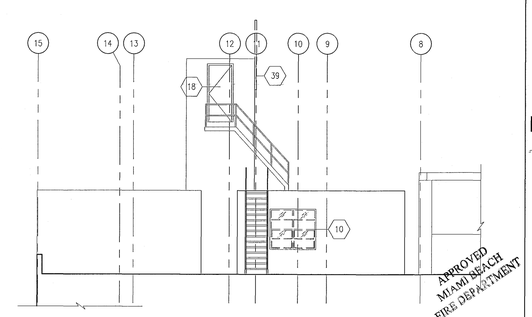

6 EXTERIOR SOUTH ELEVATION HADDON HALL ROOFTOP (EXISTING)
SCALE: 1/8" = 1'-0"

APPROVED MIAMI BEACH FIRE DEPARTMENT

HADDON HALL
1500 COLLINS AVE
MIAMI BEACH, FL

KEYPLAN N.T.S.

REVISIONS

NO.	DESCRIPTION	ISSUE DATE
1	PROGRESS TO 100% CD	02-18-2014
4	FIRE REVIEW COMMENTS	04-01-2014
6	P&Z COMMENTS	04-18-2014

MTCI PRIVATE PROVIDER SERVICES, LLC
Construction Plans Review, Inspections, Testing & Consultant

	REVIEWER INITIALS	DATE REVIEWED
BUILDING	EM	11-14-14
STRUCTURAL		
MECHANICAL		
ELECTRICAL		
PLUMBING		
SITE CIVIL		

100% CONSTRUCTION DOCUMENT SET

SEAL

5-22-14
Jonathan Cardello
Lic. # AR93391

ADD Inc Architecture Interiors Planning

One Biscayne Tower
Suite 1670
Two South
Biscayne Boulevard
Miami, Fl 33131
T. 305.482.8700
F. 305.482.8770
www.addinc.com
Lic. # AA26001507

Boston Miami

JOB NUMBER:	13036.00
CHECKED BY:	
ISSUE DATE:	FEBRUARY 18, 2014
SCALE:	1/8" = 1'-0"

SHEET TITLE

EXTERIOR DEMO
EAST AND WEST ELEV.
ROOF ELEVATIONS

SHEET NUMBER

AD301

COPYRIGHT ADD INC 2011

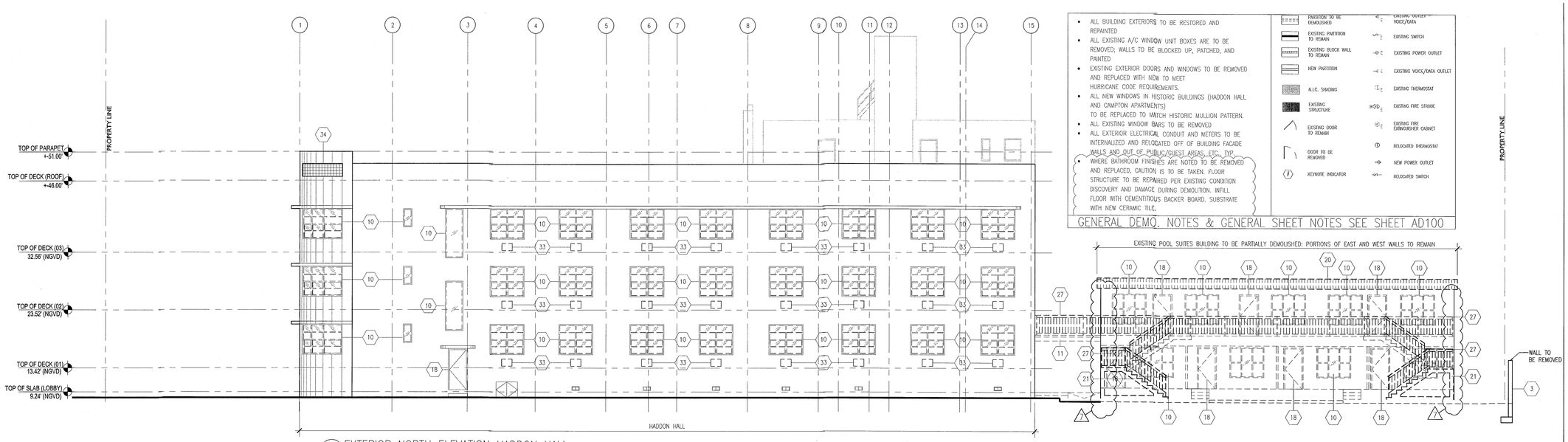

1 EXTERIOR NORTH ELEVATION HADDON HALL
SCALE: 1/8" = 1'-0"

- ALL BUILDING EXTERIORS TO BE RESTORED AND REPAINTED
- ALL EXISTING A/C WINDOW UNIT BOXES ARE TO BE REMOVED; WALLS TO BE BLOCKED UP, PATCHED, AND PAINTED
- EXISTING EXTERIOR DOORS AND WINDOWS TO BE REMOVED AND REPLACED WITH NEW TO MEET HURRICANE CODE REQUIREMENTS.
- ALL NEW WINDOWS IN HISTORIC BUILDINGS (HADDON HALL AND CAMPTON APARTMENTS) TO BE REPLACED TO MATCH HISTORIC MULLION PATTERN.
- ALL EXISTING WINDOW BARS TO BE REMOVED
- ALL EXTERIOR ELECTRICAL CONDUIT AND METERS TO BE INTERNALIZED AND RELOCATED OFF OF BUILDING FACADE WALLS AND OUT OF PUBLIC/GUEST AREAS, ETC., TYP.
- WHERE BATHROOM FINISHES ARE NOTED TO BE REMOVED AND REPLACED, CAUTION IS TO BE TAKEN. FLOOR STRUCTURE TO BE REPAIRED PER EXISTING CONDITION DISCOVERY AND DAMAGE DURING DEMOLITION. INFILL FLOOR WITH CEMENTITIOUS BACKER BOARD. SUBSTRATE WITH NEW CERAMIC TILE.

PARTITION TO BE DEMOLISHED	EXISTING OUTLET VOICE/DATA
EXISTING PARTITION TO REMAIN	EXISTING SWITCH
EXISTING BLOCK WALL TO REMAIN	EXISTING POWER OUTLET
NEW PARTITION	EXISTING VOICE/DATA OUTLET
A.L.C. SHADING	EXISTING THERMOSTAT
EXISTING STRUCTURE	EXISTING FIRE STROBE
EXISTING DOOR TO REMAIN	EXISTING FIRE EXTINGUISHER CABINET
DOOR TO BE REMOVED	RELOCATED THERMOSTAT
KEYNOTE INDICATOR	NEW POWER OUTLET
	RELOCATED SWITCH

GENERAL DEMO. NOTES & GENERAL SHEET NOTES SEE SHEET AD100

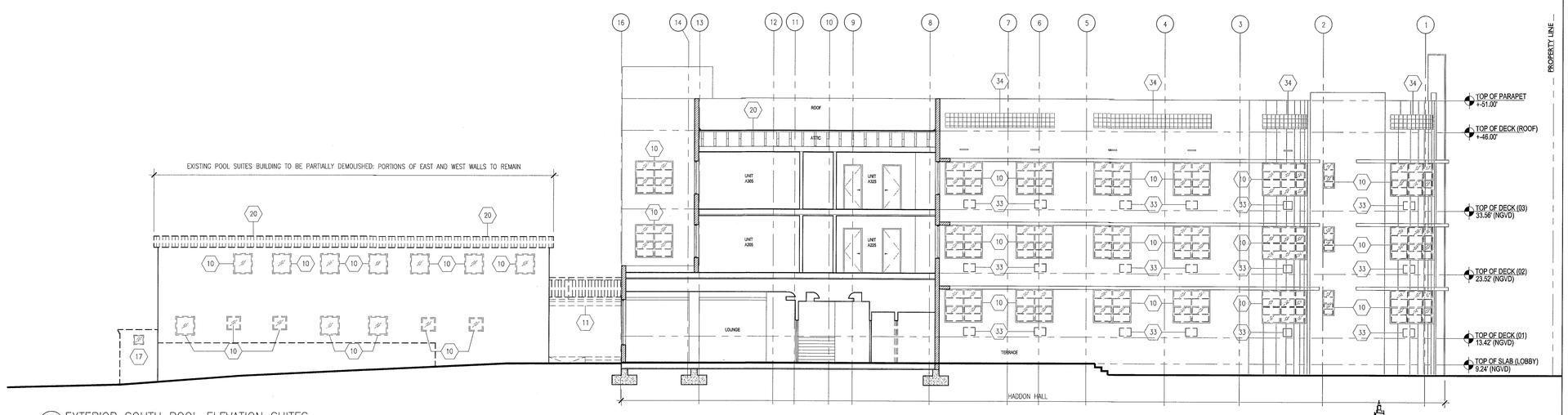

2 EXTERIOR SOUTH POOL ELEVATION SUITES
SCALE: 1/8" = 1'-0"

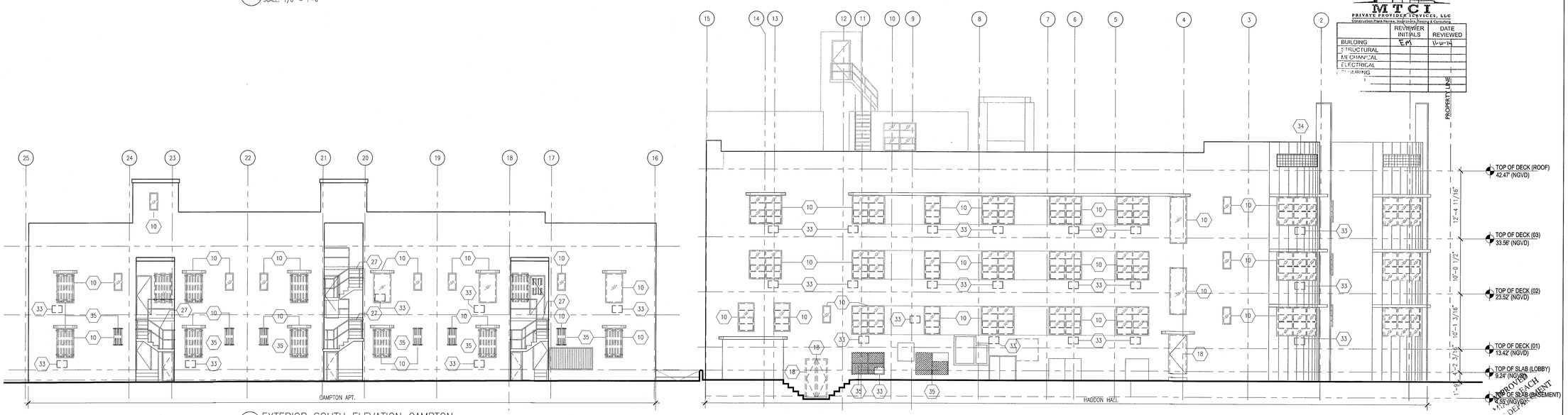

3 EXTERIOR SOUTH ELEVATION CAMPTON
SCALE: 1/8" = 1'-0"

MTCI
PRIVATE PROVIDER SERVICES, LLC
Construction Plans Review, Inspections, Testing & Consulting

	REVIEWER INITIALS	DATE REVIEWED
BUILDING	CM	11-12-14
STRUCTURAL		
MECHANICAL		
ELECTRICAL		
PLUMBING		

HADDON HALL
1500 COLLINS AVE
MIAMI BEACH, FL

KEYPLAN N.T.S.

REVISIONS

NO.	DESCRIPTION	ISSUE DATE
1	PROGRESS TO 100% CD	02-18-2014
2	POOL SUITES WALLS	04-04-2014

100% CONSTRUCTION DOCUMENT SET

SEAL

5.22.14
Jonathan Cardello
Lic. # AR93391

ADD Inc Architecture Interiors Planning

One Biscayne Tower
Suite 1670
Two South
Biscayne Boulevard
Miami, Fl 33131
T. 305.482.8700
F. 305.482.8770
www.addinc.com
Lic. # AA26001507

Boston Miami

JOB NUMBER: 13036.00
CHECKED BY:
ISSUE DATE: FEBRUARY 18, 2014
SCALE: 1/8" = 1'-0"

SHEET TITLE

EXTERIOR
EXISTING / DEMO
ELEVATIONS

SHEET NUMBER

AD302

APPROVED FOR MIAMI BEACH HISTORIC DESIGN

COPYRIGHT ADD INC 2011

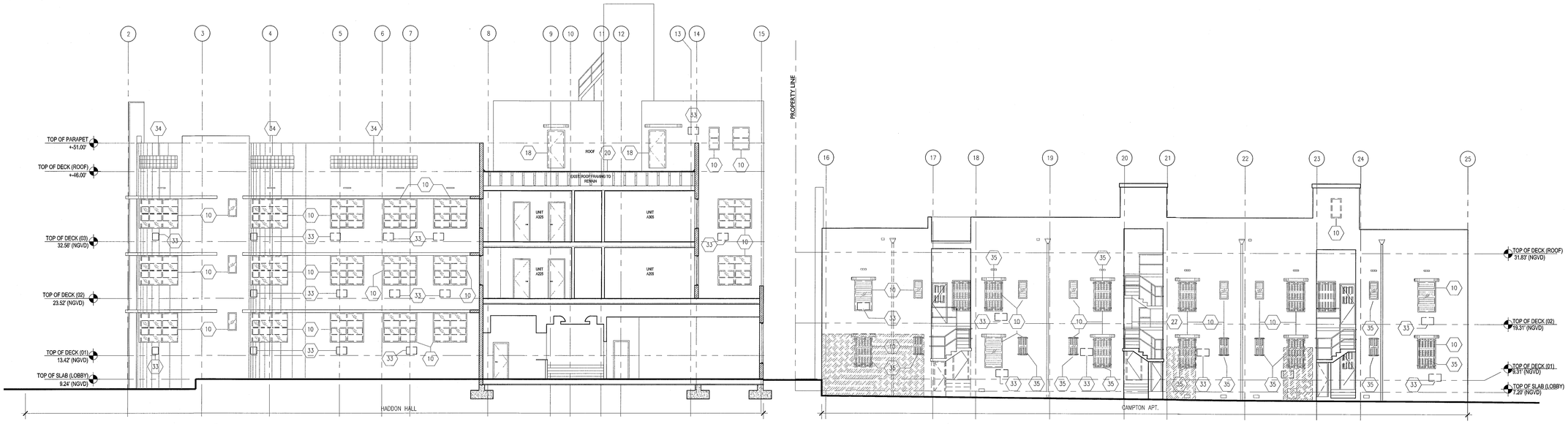

1 EXTERIOR NORTH ELEVATION CAMPTON
SCALE: 1/8" = 1'-0"

DEMOLITION SHEET NOTES

1. EXISTING CONCRETE STAIRS TO BE DEMOLISHED IN THEIR ENTIRETY
2. INTERIOR PARTITIONS TO BE DEMOLISHED
3. SELECT DEMOLITION AT EXTERIOR CMU WALLS
4. CMU WALL TO BE DEMOLISHED IN ITS ENTIRETY
5. SELECT DEMOLITION OF INTERIOR AND EXTERIOR WALLS FOR NEW PROCEDURE
6. SELECT DEMOLITION OF FLOORING FOR NEW PROGRAM
7. FLOORING TO BE DEMOLISHED (INCLUDING AT CAMPTON INDOOR/ OUTDOOR RESTAURANT AND AT CAMPTON KITCHEN; AREAS TO RECEIVE NEW STRUCTURE.
8. REMOVE EXISTING PLUMBING FIXTURES
9. EXISTING FLOOR MATERIAL TO BE DEMOLISHED IN SELECT AREA; NEW FLOOR TO BE INSTALLED AT NEW FLOOR ELEVATION
10. REMOVE EXISTING WINDOW AND FRAME PATCH AND PAINT TO MATCH EXISTING FINISH
11. EXISTING WOOD FRAMED FOOT BRIDGE TO BE DEMOLISHED IN ITS ENTIRETY
12. HARDSCAPE TO BE DEMOLISHED FOR NEW ENTRANCE DRIVE CONFIGURATION AND WALKWAY (SEE LANDSCAPE PLAN).
13. HARDSCAPE TO BE DEMOLISHED; TO BE REPLACED WITH LANDSCAPE (SEE LANDSCAPE PLAN)
14. HISTORIC FOUNTAIN LOCATION TO REMAIN; TO BE RESTORED
15. EXISTING ENTRANCE TO REMAIN; SELECT DEMOLITION REQUIRED AT ADJACENT LOCATION FOR MATCHING PILLAR.
16. EXISTING CONCRETE RAMP TO BE DEMOLISHED IN ITS ENTIRETY.
17. EXISTING RETAINING WALL TO BE REMOVED IN ITS ENTIRETY.
18. EXISTING DOOR AND FRAMES TO BE REMOVED.
18A. EXISTING HISTORIC DOORS AND FRAMES TO REMAIN; TO BE RESTORED INCLUD. NEW GLAZING, FINISH, AND HARDWARE.
19. ROOFING TO BE REMOVED AND REDONE
20. ROOF SYSTEM AND FRAMING TO BE DEMOLISHED.
21. CONCRETE STEPS TO BE REMOVED.
21A. EXISTING EXTERIOR ON-GRADE PAVING MATERIAL TO BE REMOVED THROUGHOUT FOR UG UTILITY INSTALLATION IN AREAS OF WORK.
22. CONCRETE STRUCTURE TO BE REMOVED IN ITS ENTIRETY.
23. CONCRETE CURB TO BE DEMOLISHED.
24. EXISTING CONCRETE DECORATIVE RAIL TO BE REMOVED, POSTS TO REMAIN.
25. EXISTING COPING TO BE REMOVED.
26. REMOVE CONCRETE POOL DECK TILES.
27. EXISTING METAL RAIL TO BE REMOVED.
28. EXISTING POOL SHOWER TO BE RECONFIGURED
29. EXISTING WALL TO REMAIN IN ITS ENTIRETY.
30. POLE SIGN TO BE RESTORED.
31. EXISTING OVERHANG TO REMAIN
32. REMOVE EXISTING CHAIN-FENCING AND BARBED WIRE
33. REMOVE EXISTING THRU-WALL A/C UNIT. PATCH AND PAINT TO MATCH EXISTING FINISH
34. REMOVE EXISTING GLASS BLOCK PANELS.
35. REMOVE EXISTING WINDOW BARS, PATCH AND PAINT TO MATCH EXISTING.
36. REMOVE EXISTING WHEELS STOPS.
37. REMOVE EXISTING PAVING.
38. REMOVE & REROUTE EXISTING EXPOSED ELECTRICAL CONDUIT.
39. REMOVE EXISTING TV ANTENA
40. REMOVE EXISTING CONCRETE BALUSTRADE
41. CONCRETE POST TO REMAIN
42. REMOVE EXISTING MOSAIC TILES AT SOUTH PUMP ROOM WALL – POOLSIDE
43. DEMO PREP FOR PROPOSED BOULDERS. REFER TO SHEET A101.
44. RELOCATE EXISTING VENTILATION GRILL AT GUESTROOM
45. BATHROOMS IF CONFLICTS WITH NEW DROPPED CEILING. REMOVE EXISTING METAL RAILING
46. EXISTING RAMP TO REMAIN. HAND RAILS TO BE REPLACED AND BROUGHT UP TO CODE
47. REMOVE ALL EXISTING EXTERIOR STAIRWELL HANDRAILS AT CAMPTON APTS.; TO BE REPLACED WITH NEW CODE COMPLIANT
48. REMOVE WOOD DECK AND WOOD JOIST

REPLACEMENT & RESTORATION NOTES

- ALL BUILDING EXTERIORS TO BE RESTORED AND REPAINTED
- ALL EXISTING A/C WINDOW UNIT BOXES ARE TO BE REMOVED; WALLS TO BE BLOCKED UP, PATCHED, AND PAINTED
- EXISTING EXTERIOR DOORS AND WINDOWS TO BE REMOVED AND REPLACED WITH NEW TO MEET HURRICANE CODE REQUIREMENTS.
- ALL NEW WINDOWS IN HISTORIC BUILDINGS (HADDON HALL AND CAMPTON APARTMENTS) TO BE REPLACED TO MATCH HISTORIC MULLION PATTERN.
- ALL EXISTING WINDOW BARS TO BE REMOVED
- ALL EXTERIOR ELECTRICAL CONDUIT AND METERS TO BE INTERNALIZED AND RELOCATED OFF OF BUILDING FACADE WALLS AND OUT OF PUBLIC/GUEST AREAS, ETC., TYP.
- WHERE BATHROOM FINISHES ARE NOTED TO BE REMOVED AND REPLACED, CAUTION IS TO BE TAKEN. FLOOR STRUCTURE TO BE REPAIRED PER EXISTING CONDITION DISCOVERY AND DAMAGE DURING DEMOLITION. INFILL FLOOR WITH CEMENTITIOUS BACKER BOARD. SUBSTRATE WITH NEW CERAMIC TILE.
- REPAIR/REPLACE DAMAGED WOOD DECKING AT CAMPTON AND HADDON AS DETECTED DURING NEW ROOF WORK.
- REPAIR/REPLACE DAMAGED WOOD FLOORING AT ALL AREAS OF WORK.

1

LEGEND

	PARTITION TO BE DEMOLISHED	E	EXISTING OUTLET – VOICE/DATA
	EXISTING PARTITION TO REMAIN	E	EXISTING SWITCH
	EXISTING BLOCK WALL TO REMAIN	E	EXISTING POWER OUTLET
	NEW PARTITION	E	EXISTING VOICE/DATA OUTLET
	N.I.C. SHADING	E	EXISTING THERMOSTAT
	EXISTING STRUCTURE	E	EXISTING FIRE STROBE
	EXISTING DOOR TO REMAIN	E	EXISTING FIRE EXTINGUISHER CABINET
	DOOR TO BE REMOVED		RELOCATED THERMOSTAT
F	KEYNOTE INDICATOR		NEW POWER OUTLET
			RELOCATED SWITCH

GENERAL DEMOLITION NOTES SEE SHEET AD100

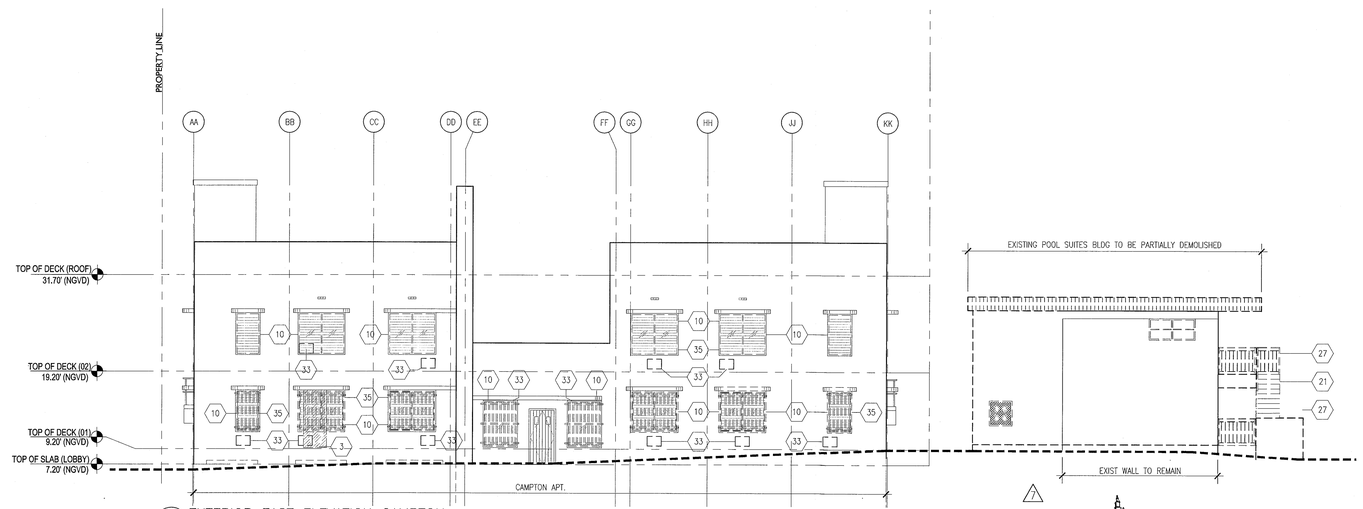

2 EXTERIOR EAST ELEVATION CAMPTON
SCALE: 1/8" = 1'-0"

MTCI
PRIVATE PROVIDER SERVICES, LLC
Construction Plans Review, Inspections, Testing & Consulting

	REVIEWER INITIALS	DATE REVIEWED
BUILDING	EM	1/13/14
STRUCTURAL		
MECHANICAL		
ELECTRICAL		
PLUMBING		
FIRE		

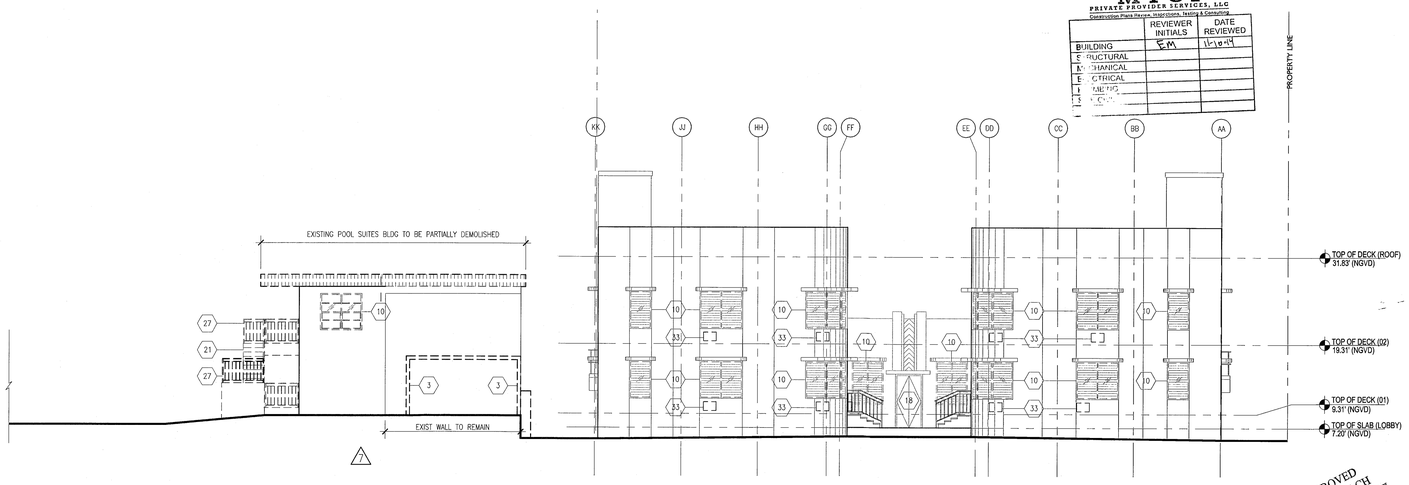

3 EXTERIOR WEST ELEVATION POOL SUITES
SCALE: 1/8" = 1'-0"

APPROVED
MIAMI BEACH
FIRE DEPARTMENT

HADDON HALL
1500 COLLINS AVE
MIAMI BEACH, FL

KEYPLAN N.T.S.

REVISIONS

NO.	DESCRIPTION	ISSUE DATE
1	PROGRESS TO 100% CD	02-18-2014
2	POOL SUITES WALLS	04-04-2014

100% CONSTRUCTION DOCUMENT SET

SEAL

Jonathan Cardello
Lic. # AR93391

ADD Inc Architecture Interiors Planning

One Biscayne Tower
Suite 1670
Two South
Biscayne Boulevard
Miami, Fl 33131
T. 305.482.8700
F. 305.482.8770
www.addinc.com
Lic. # AA26001507

Boston Miami

JOB NUMBER: 13036.00
CHECKED BY:
ISSUE DATE: FEBRUARY 18, 2014
SCALE: 1/8" = 1'-0"

SHEET TITLE

EXTERIOR EXISTING / DEMO ELEVATIONS

SHEET NUMBER

AD303

COPYRIGHT ADD INC 2011

GENERAL DEMOLITION NOTES

1. NOTIFY THE ARCHITECT OF ANY UNEXPECTED FIELD CONDITION OR ANY DISCREPANCY BEFORE PROCEEDING. GC IS TO COORDINATE THE COMPLETE SCOPE OF WORK FOR DEMO WITH CONSTRUCTION DOCUMENTS.
2. NO MAIN FRAME OR STRUCTURAL MEMBERS ARE TO BE MODIFIED, ALTERED OR CUT WITHOUT THE APPROVAL OF THE ARCHITECT AND STRUCTURAL ENGINEER.
3. WHEN DEMOLISHING MATERIALS NEXT TO ABUTTING MATERIALS, CARE MUST BE TAKEN TO AVOID DAMAGING ELEMENTS TO REMAIN. G.C. WILL BE RESPONSIBLE FOR ALL REPAIRS.
4. PROVIDE STRICT CONTROL OF JOB CLEANING AND PREVENT DUST AND DEBRIS FROM EMANATING FROM DEMOLITION CONSTRUCTION AREA.
5. COORDINATE DEBRIS REMOVAL WITH OWNER. ALL DEBRIS REMOVAL MUST BE PREFORMED IN ACCORDANCE WITH BUILDING MANAGEMENT PROCEDURES AND DERM REQUIREMENTS.
6. FIRE ALARM DEVICES (SMOKE DETECTORS AND HORNS) WITHIN DEMO SPACE SHALL REMAIN CONNECTED TO EXISTING SYSTEMS. SECURE DEVICES AS NECESSARY TO KEEP FROM HANGING FREELY UPON REMOVAL OF WALLS AND CEILING.
7. DEMOLITION IS NOT NECESSARILY LIMITED TO WHAT IS SHOWN ON DRAWINGS. THE INTENT IS TO INDICATE THE GENERAL SCOPE OF DEMOLITION REQUIRED.
8. DISCONNECT AND MAKE SAFE ALL ELECTRICAL EQUIPMENT AND ASSOCIATED BOXES, DEVICES AND WIRING IDENTIFIED FOR REMOVAL.
9. RELOCATION OF ANY EQUIPMENT, CABLING SWITCHES, AND CONDUIT PERTAINING TO DATA/COMMUNICATIONS SHALL BE VERIFIED WITH TELEPHONE COMPANIES, SERVICES OWNER OR TENANT AS REQUIRED.
10. ALL STAIRWAYS MUST REMAIN ACCESSIBLE AT ALL TIMES DURING DEMOLITION PER 207 FBC 3310. PROVIDE TEMPORARY STAIRWAY FLOOR NUMBERS SIGNS PER 2007 FBC 3310.3.
11. IF APPLICABLE, ALL EXISTING FLOOR MOUNTED OUTLETS TO BE REMOVED SHALL BE CAPPED OFF TO THE NEAREST JUNCTION BOX. FILL AND LEVEL FLOOR ACCEPT NEW FLOOR COVERINGS.
12. THE CONTRACTOR SHALL INSPECT THE EXISTING FIELD CONDITIONS AT THE SITE PRIOR TO THE START OF ANY WORK TO DETERMINE WHAT EFFECT THTE EXISTING CONDITIONS WILL HAVE ON HIS WORK. POTENTIAL PROBLEM AREAS SHALL BE BROUGHT TO THE ATTN. OF THE ARCHITECT AND/OR ENGINEER IMMEDIATELY.
13. SHUTDOWN OF EXISTING SYSTEMS FOR CONNECTION TO EXISTING SERVICES SHALL BE COORDINATED WITH THE CONSTRUCTION MANAGER AND BUILDING OWNER. THE CONTRACTOR SHALL SUBMIT REQUESTS, WHERE THEY AFFECT THE OPERATION OF THE BUILDING SYSTEMS, AT LEAST ONE WEEK IN ADVANCE OF ANY REQUIRED SHUTDOWN. THE ACTUAL SHUTDOWN PERIOD SHALL BE AS SHORT AS POSSIBLE AND AT A TIME MUTUALLY AGREEABLE TO THE BUILDING OWNER AND THE CONSTRUCTION MANAGER.
14. REMOVE ALL MISCELLANEOUS UNUSED CLIPS, ANCHORS, ETC. FROM MASONRY, WALLS, COLUMNS, BEAMS, AND DECKS.

DEMOLITION SHEET NOTES

1. EXISTING CONCRETE STAIRS TO BE DEMOLISHED IN THEIR ENTIRETY
2. INTERIOR PARTITIONS TO BE DEMOLISHED
3. SELECT DEMOLITION AT EXTERIOR CMU WALLS
4. CMU WALL TO BE DEMOLISHED IN ITS ENTIRETY
5. SELECT DEMOLITION OF INTERIOR AND EXTERIOR WALLS FOR NEW PROCEDURE
6. SELECT DEMOLITION OF FLOORING FOR NEW PROGRAM
7. FLOORING TO BE DEMOLISHED (INCLUDING AT CAMPTON INDOOR/OUTDOOR RESTAURANT AND AT CAMPTON KITCHEN; AREAS TO RECEIVE NEW STRUCTURE.
8. REMOVE EXISTING PLUMBING FIXTURES
9. EXISTING FLOOR MATERIAL TO BE DEMOLISHED IN SELECT AREA; NEW FLOOR TO BE INSTALLED AT NEW FLOOR ELEVATION
10. REMOVE EXISTING WINDOW AND FRAME PATCH AND PAINT TO MATCH EXISTING FINISH
11. EXISTING WOOD FRAMED FOOT BRIDGE TO BE DEMOLISHED IN ITS ENTIRETY
12. HARDSCAPE TO BE DEMOLISHED FOR NEW ENTRANCE DRIVE CONFIGURATION AND WALKWAY (SEE LANDSCAPE PLAN).
13. HARDSCAPE TO BE DEMOLISHED; TO BE REPLACED WITH LANDSCAPE (SEE LANDSCAPE PLAN).
14. HISTORIC FOUNTAIN LOCATION TO REMAIN; TO BE RESTORED
15. EXISTING ENTRANCE TO REMAIN; SELECT DEMOLITION REQUIRED AT ADJACENT LOCATION FOR MATCHING PILLAR.
16. EXISTING CONCRETE RAMP TO BE DEMOLISHED IN ITS ENTIRETY.
17. EXISTING RETAINING WALL TO BE REMOVED IN ITS ENTIRETY.
18. EXISTING DOOR AND FRAMES TO BE REMOVED.

18A. EXISTING HISTORIC DOORS AND FRAMES TO REMAIN; TO BE RESTORED INCLUD. NEW GLAZING, FINISH, AND HARDWARE.

19. ROOFING TO BE REMOVED AND REDONE
20. ROOF SYSTEM AND FRAMING TO BE DEMOLISHED.
21. CONCRETE STEPS TO BE REMOVED.

21A. EXISTING EXTERIOR ON-GRADE PAVING MATERIAL TO BE REMOVED THROUGHOUT FOR UG UTILITY INSTALLATION IN AREAS OF WORK.

22. CONCRETE STRUCTURE TO BE REMOVED IN ITS ENTIRETY.
23. CONCRETE CURB TO BE DEMOLISHED.
24. EXISTING CONCRETE DECORATIVE RAIL TO BE REMOVED, POSTS TO REMAIN.
25. EXISTING COPING TO BE REMOVED.
26. REMOVE CONCRETE POOL DECK TILES.
27. EXISTING METAL RAIL TO BE REMOVED.
28. EXISTING POOL SHOWER TO BE RECONFIGURED
29. EXISTING WALL TO REMAIN IN ITS ENTIRETY.
30. POLE SIGN TO BE RESTORED.
31. EXISTING OVERHANG TO REMAIN
32. REMOVE EXISTING CHAIN-FENCING AND BARBED WIRE
33. REMOVE EXISTING THRU-WALL A/C UNIT. PATCH AND PAINT TO MATCH EXISTING FINISH
34. REMOVE EXISTING GLASS BLOCK PANELS.
35. REMOVE EXISTING WINDOW BARS, PATCH AND PAINT TO MATCH EXISTING.
36. REMOVE EXISTING WHEELS STOPS.
37. REMOVE EXISTING PAVING.
38. REMOVE & REROUTE EXISTING EXPOSED ELECTRICAL CONDUIT.
39. REMOVE EXISTING TV ANTENA
40. REMOVE EXISTING CONCRETE BALUSTRADE
41. CONCRETE POST TO REMAIN
42. REMOVE EXISTING MOSAIC TILES AT SOUTH PUMP ROOM WALL – POOLSIDE
43. DEMO PREP FOR PROPOSED BOULDERS. REFER TO SHEET A101.
44. RELOCATE EXISTING VENTILATION GRILL AT GUESTROOM
45. BATHROOMS IF CONFLICTS WITH NEW DROPPED CEILING. REMOVE EXISTING METAL RAILING
46. EXISTING RAMP TO REMAIN. HAND RAILS TO BE REPLACED AND BROUGHT UP TO CODE
47. REMOVE ALL EXISTING EXTERIOR STAIRWELL HANDRAILS AT CAMPTON APTS.; TO BE REPLACED WITH NEW CODE COMPLIANT
48. REMOVE WOOD DECK AND WOOD JOIST

REPLACEMENT & RESTORATION NOTES

- ALL BUILDING EXTERIORS TO BE RESTORED AND REPAINTED
- ALL EXISTING A/C WINDOW UNIT BOXES ARE TO BE REMOVED; WALLS TO BE BLOCKED UP, PATCHED, AND PAINTED
- EXISTING EXTERIOR DOORS AND WINDOWS TO BE REMOVED AND REPLACED WITH NEW TO MEET HURRICANE CODE REQUIREMENTS.
- ALL NEW WINDOWS IN HISTORIC BUILDINGS (HADDON HALL AND CAMPTON APARTMENTS) TO BE REPLACED TO MATCH HISTORIC MULLION PATTERN.
- ALL EXISTING WINDOW BARS TO BE REMOVED
- ALL EXTERIOR ELECTRICAL CONDUIT AND METERS TO BE INTERNALIZED AND RELOCATED OFF OF BUILDING FACADE WALLS AND OUT OF PUBLIC/GUEST AREAS, ETC., TYP.
- WHERE BATHROOM FINISHES ARE NOTED TO BE REMOVED AND REPLACED, CAUTION IS TO BE TAKEN. FLOOR STRUCTURE TO BE REPAIRED PER EXISTING CONDITION DISCOVERY AND DAMAGE DURING DEMOLITION. INFILL FLOOR WITH CEMENTITIOUS BACKER BOARD. SUBSTRATE WITH NEW CERAMIC TILE.
- REPAIR/REPLACE DAMAGED WOOD DECKING AT CAMPTON AND HADDON AS DETECTED DURING NEW ROOF WORK.
- REPAIR/REPLACE DAMAGED WOOD FLOORING AT ALL AREAS OF WORK.

1

LEGEND

PARTITION TO BE DEMOLISHED	EXISTING OUTLET – VOICE/DATA
EXISTING PARTITION TO REMAIN	EXISTING SWITCH
EXISTING BLOCK WALL TO REMAIN	EXISTING POWER OUTLET
NEW PARTITION	EXISTING VOICE/DATA OUTLET
H.V.C. SHADING	EXISTING THERMOSTAT
EXISTING STRUCTURE	EXISTING FIRE STROBE
EXISTING DOOR TO REMAIN	EXISTING FIRE EXTINGUISHER CABINET
DOOR TO BE REMOVED	RELOCATED THERMOSTAT
	NEW POWER OUTLET
KEYNOTE INDICATOR	RELOCATED SWITCH

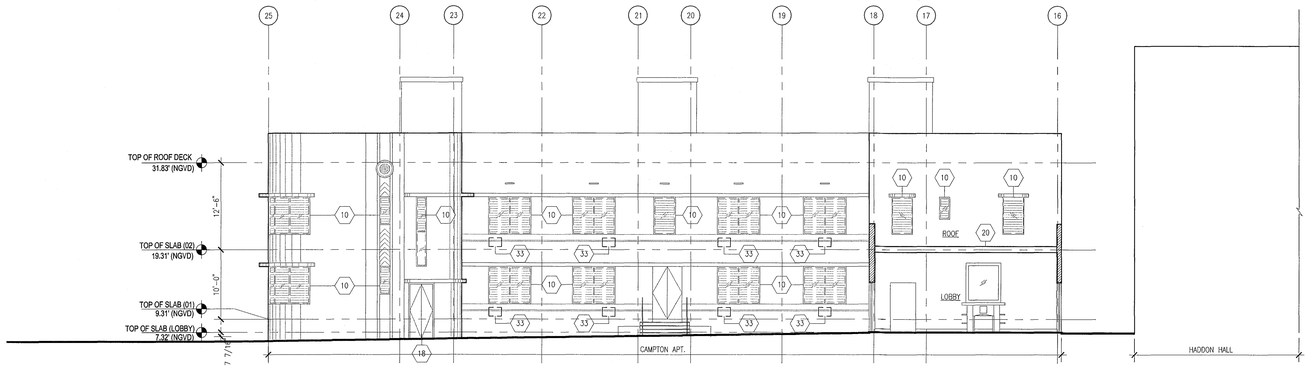

1 EXTERIOR NORTH ELEVATION CAMPTON COURTYARD
SCALE: 1/8" = 1'-0"

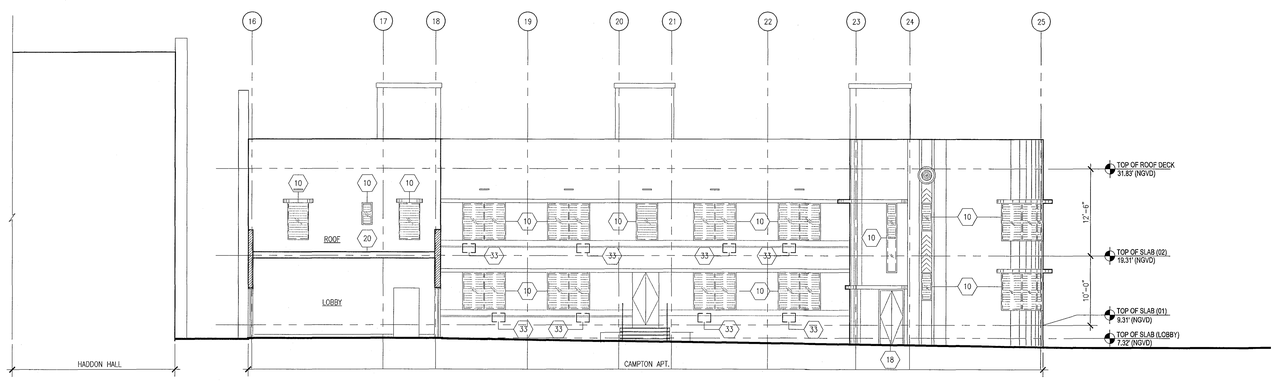

2 EXTERIOR ELEVATION SOUTH CAMPTON COURTYARD
SCALE: 1/8" = 1'-0"

MTCI
PRIVATE PROVIDER SERVICES, LLC
Construction Plans Review, Inspections, Testing & Consulting

	REVIEWER INITIALS	DATE REVIEWED
BUILDING	EN	11-19-14
STRUCTURAL		
MECHANICAL		
ELECTRICAL		
PLUMBING		
ENERGY		

APPROVED
MIAMI BEACH
FIRE DEPARTMENT

HADDON HALL
1500 COLLINS AVE
MIAMI BEACH, FL

KEYPLAN N.T.S.

REVISIONS

NO.	DESCRIPTION	ISSUE DATE
1	PROGRESS TO 100% CD	02-18-2014

100% CONSTRUCTION DOCUMENT SET

SEAL

5-22-14
Jonathan Cardello
Lic. # AR93391

ADD Inc Architecture Interiors Planning

One Biscayne Tower
Suite 1670
Two South
Biscayne Boulevard
Miami, Fl 33131
T. 305.482.8700
F. 305.482.8770
www.addinc.com
Lic. # AA26001507

Boston Miami

JOB NUMBER: 13036.00
CHECKED BY:
ISSUE DATE: FEBRUARY 18, 2014
SCALE: 1/8" = 1'-0"

SHEET TITLE

EXTERIOR
EXISTING / DEMO
ELEVATIONS

SHEET NUMBER

AD304

COPYRIGHT ADD INC 2011

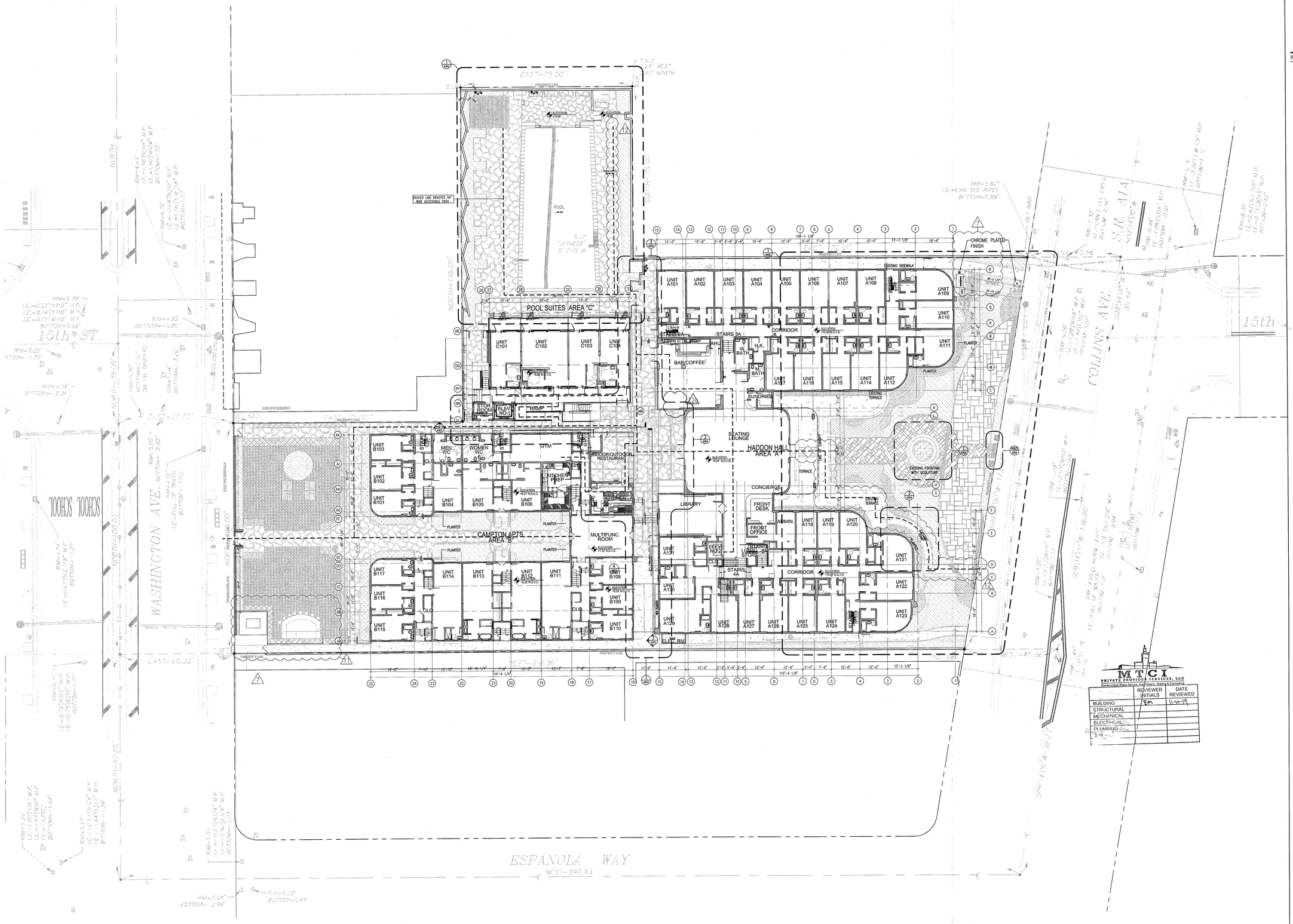

1 ARCHITECTURAL SITE PLAN
SCALE: 1/16" = 1'-0"

HADDON HALL
1500 COLLINS AVE.
MIAMI BEACH, FL

KEYPLAN N.T.S.

REVISIONS

NO.	DESCRIPTION	ISSUE DATE
7	POOL SUITES WALLS	04-04-2014
11	P&Z COMMENTS	07-14-2014
12	FIRE & MTCI PERMIT COMMENTS	08-21-2014
12A	FIRE & MTCI PERMIT COMMENTS	09-29-2014

100% CONSTRUCTION DOCUMENT SET

NORTH SEAL

10-9-14
Jonathan Cardello
Lic. # AR93391

ADD Inc Architecture Interiors Planning

One Biscayne Tower
Suite 1670
Two South
Biscayne Boulevard
Miami, Fl 33131
T. 305.482.8700
F. 305.482.8770
www.addinc.com
Lic. # AA26001507

Boston Miami

MTCI
PRIVATE PROVIDER SERVICES, LLC
Construction Plans Review, Inspection, Training & Consulting

	REVIEWER INITIALS	DATE REVIEWED
BUILDING	FM	11-10-14
STRUCTURAL		
MECHANICAL		
ELECTRICAL		
PLUMBING		
SITE		

JOB NUMBER:	13036.00
CHECKED BY:	
ISSUE DATE:	FEBRUARY 18, 2014
SCALE:	1/16" = 1'-0"

SHEET TITLE

ARCHITECTURAL SITE PLAN

SHEET NUMBER

A001

APPROVED MIAMI BEACH FIRE DEPARTMENT

COPYRIGHT ADD INC 2011

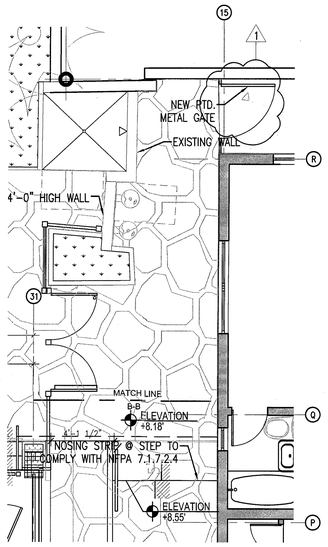

3 ENLARGED FIRST FLOOR PLAN – COURTYARD
SCALE: 1/4" = 1'-0"

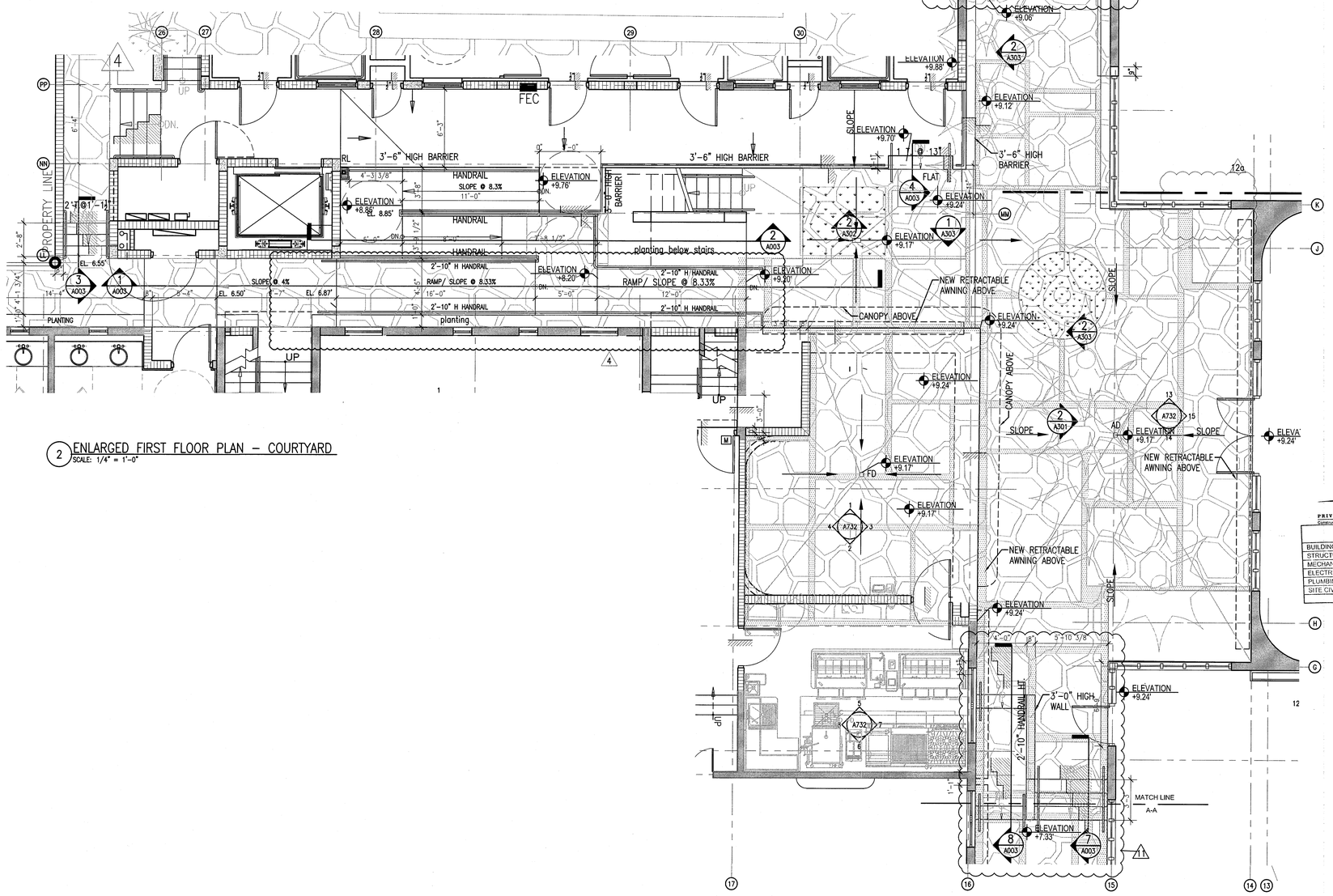

2 ENLARGED FIRST FLOOR PLAN – COURTYARD
SCALE: 1/4" = 1'-0"

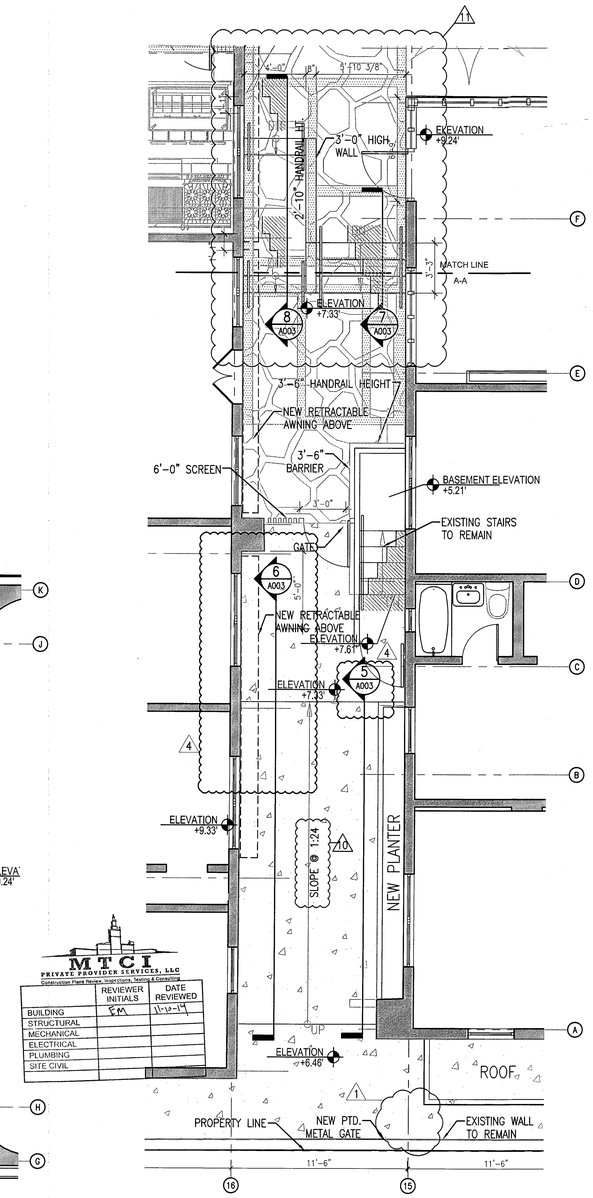

1 ENLARGED FIRST FLOOR PLAN – COURTYARD
SCALE: 1/4" = 1'-0"

MTCI
PRIVATE PROVIDER SERVICES, LLC
Construction Plans Review, Inspections, Testing & Consulting

	REVIEWER INITIALS	DATE REVIEWED
BUILDING	EM	11-12-14
STRUCTURAL		
MECHANICAL		
ELECTRICAL		
PLUMBING		
SITE CIVIL		

APPROVED
MIAMI BEACH
FIRE DEPARTMENT

HADDON HALL
1500 COLLINS AVE
MIAMI BEACH, FL

KEYPLAN N.T.S.

REVISIONS

NO.	DESCRIPTION	ISSUE DATE
1	PROGRESS TO 100% CD	02-18-2014
4	FIRE REVIEW COMMENTS	04-01-2014
10	MASTER PERMIT COMMENTS	07-03-2014
11	P&Z COMMENTS	07-14-2014
12a	FIRE & MTCI PERMIT COMMENTS	09-29-2014

100% CONSTRUCTION DOCUMENT SET

NORTH SEAL

10-9-14
Jonathan Cardello
Lic. # AR93391

ADD Inc Architecture Interiors Planning

One Biscayne Tower
Suite 1670
Two South
Biscayne Boulevard
Miami, Fl 33131
T. 305.482.8700
F. 305.482.8770
www.addinc.com
Lic. # AA26001507

Boston Miami

JOB NUMBER:	13036.00
CHECKED BY:	
ISSUE DATE:	FEBRUARY 18, 2014
SCALE:	1/4" = 1'-0"

SHEET TITLE

ENLARGED FIRST FLOOR PLAN - CENTER AREA 'A'

SHEET NUMBER

A002

COPYRIGHT ADD INC 2011

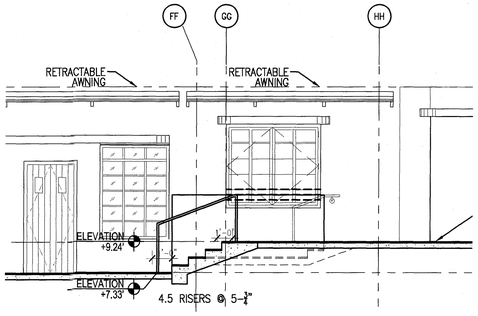

8 SECTION THRU STAIRS COURTYARD
SCALE: 1/4" = 1'-0"

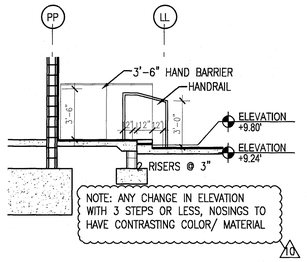

4 SECTION THRU STAIRS COURTYARD
SCALE: 1/4" = 1'-0"

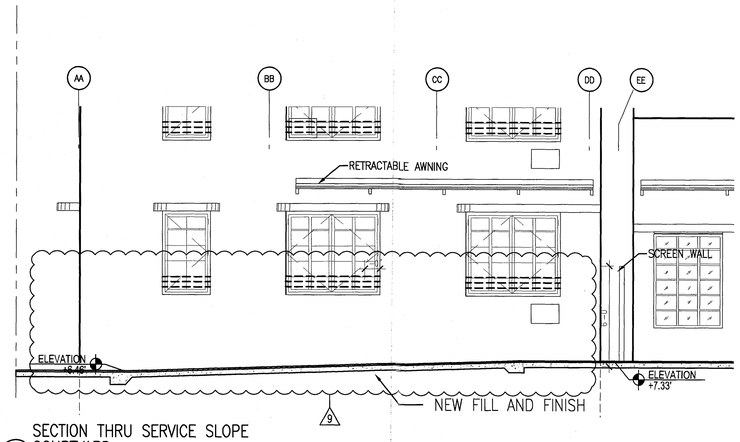

5 SECTION THRU SERVICE SLOPE COURTYARD
SCALE: 1/4" = 1'-0"

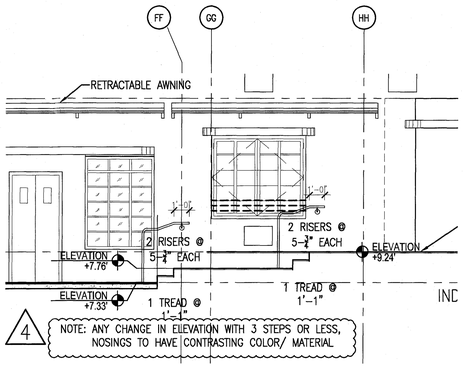

7 SECTION THRU STAIRS COURTYARD
SCALE: 1/4" = 1'-0"

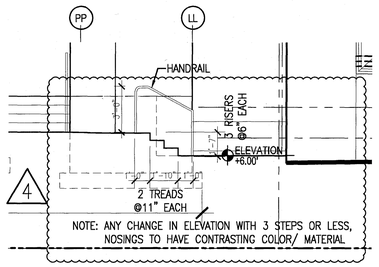

3 SECTION THRU STAIRS COURTYARD
SCALE: 1/4" = 1'-0"

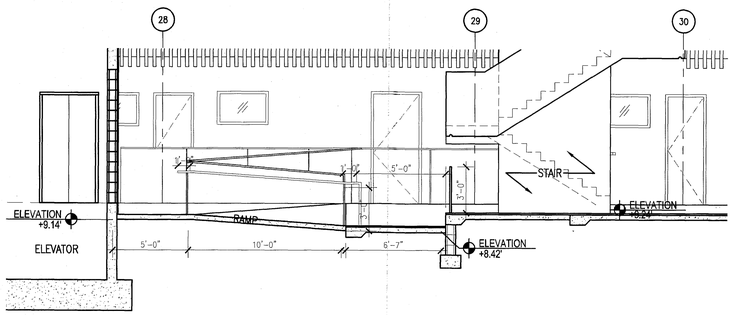

2 SECTION THRU RAMP COURTYARD
SCALE: 1/4" = 1'-0"

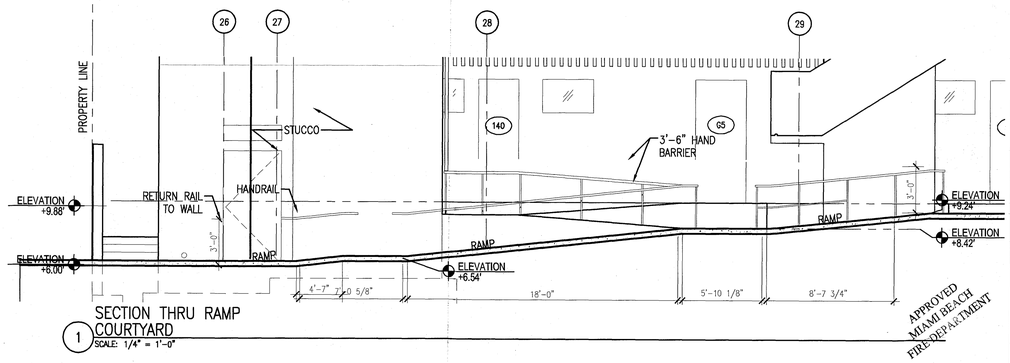

1 SECTION THRU RAMP COURTYARD
SCALE: 1/4" = 1'-0"

APPROVED MIAMI BEACH FIRE DEPARTMENT

MTCI PRIVATE PROVIDER SERVICES, LLC
Construction Plans Review, Inspections, Testing & Consulting

	REVIEWER INITIALS	DATE REVIEWED
BUILDING	EM	11-10-14
STRUCTURAL		
MECHANICAL		
ELECTRICAL		
PLUMBING		
GAS		

HADDON HALL
1500 COLLINS AVE
MIAMI BEACH, FL

KEYPLAN N.T.S.

REVISIONS

NO.	DESCRIPTION	ISSUE DATE
4	FIRE REVIEW COMMENTS	04-01-2014
9	KITCHEN REINFORCEMENT	05-30-2014
10	MASTER PERMIT COMMENTS	07-03-2014

100% CONSTRUCTION DOCUMENT SET

SEAL

8/4/14
Jonathan Cardello
Lic. # AR93391

ADD Inc Architecture Interiors Planning

One Biscayne Tower
Suite 1670
Two South
Biscayne Boulevard
Miami, Fl 33131
T. 305.482.8700
F. 305.482.8770
www.addinc.com
Lic. # AA26001507

Boston Miami

JOB NUMBER: 13036.00
CHECKED BY:
ISSUE DATE: FEBRUARY 18, 2014
SCALE: AS NOTED

SHEET TITLE

SITE DETAILS

SHEET NUMBER

A003

COPYRIGHT ADD INC 2011

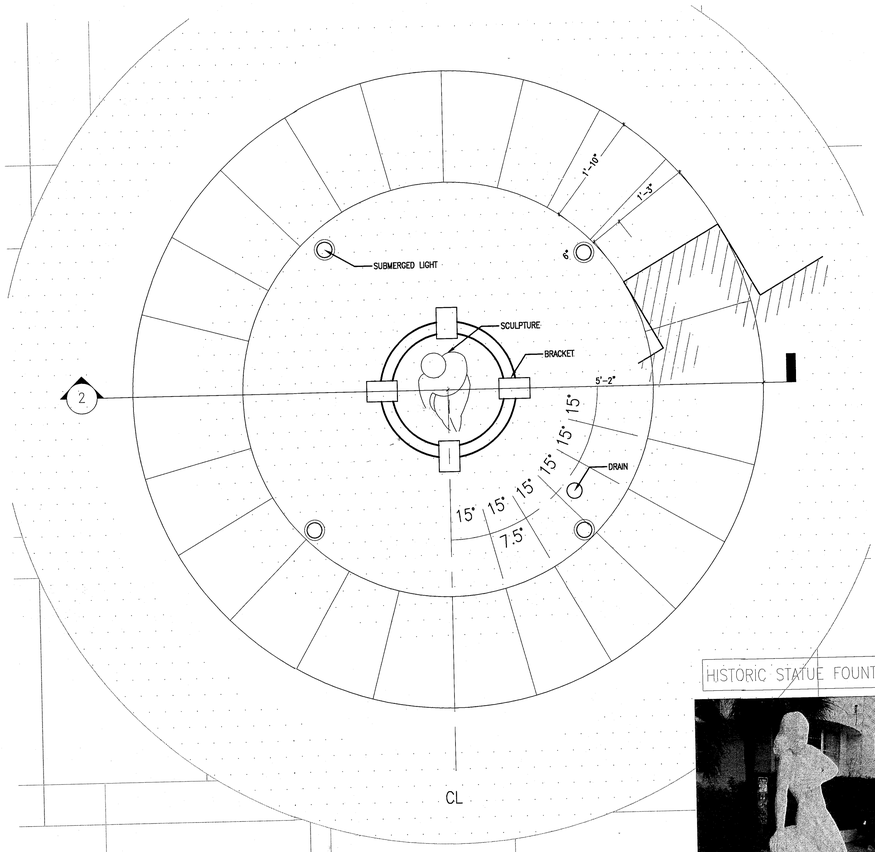

1 HADDON HALL – PLAN HISTORIC FOUNTAIN WITH SCULPTURE
SCALE: 1" = 1'-0"

HISTORIC STATUE FOUNTAIN

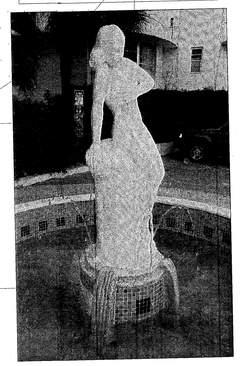

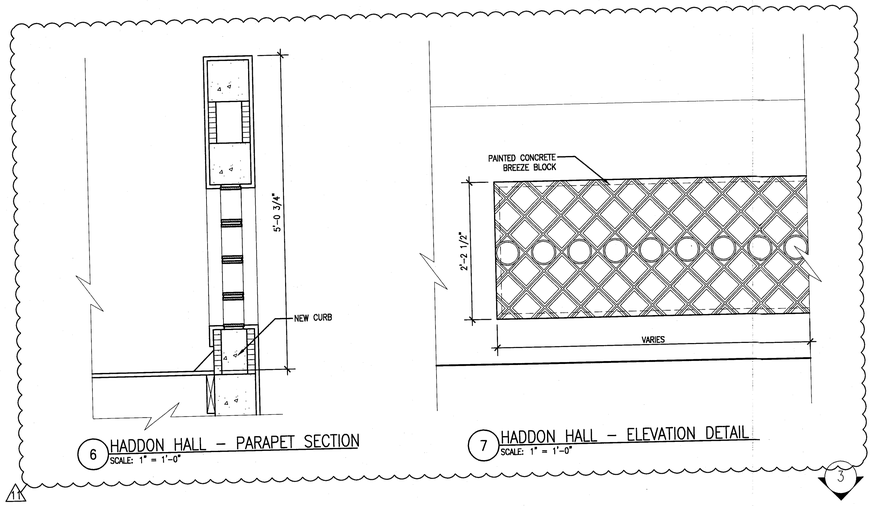

6 HADDON HALL – PARAPET SECTION
SCALE: 1" = 1'-0"

7 HADDON HALL – ELEVATION DETAIL
SCALE: 1" = 1'-0"

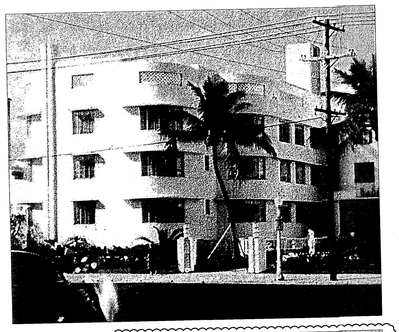

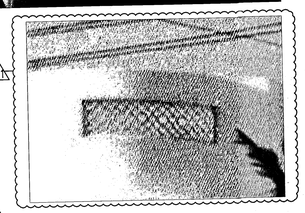

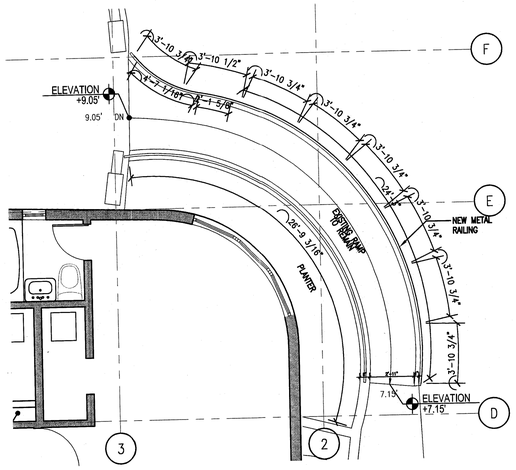

3 HADDON HALL – PLAN / EXISTING RAMP
SCALE: 1/4" = 1'-0"

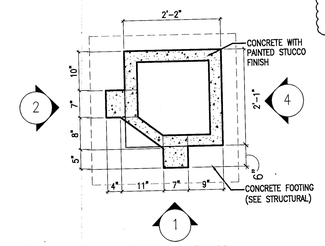

SECTION PLAN

4 HADDON HALL – HISTORIC PILLAR
SCALE: 1" = 1'-0"

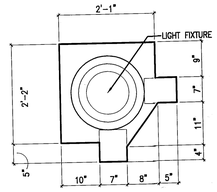

TOP VIEW

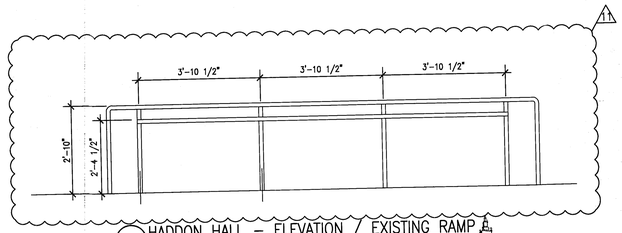

3a HADDON HALL – ELEVATION / EXISTING RAMP
SCALE: 1/4" = 1'-0"

HISTORIC FOUNTAIN SCOPE OF WORK: HISTORIC STATUE AND FOUNTAIN TO REMAIN IN EXISTING ORIGINAL LOCATION; RESTORE PLASTER STATUE – CAREFULLY REMOVE BUILT-UP LAYERS OF PLASTER/PAINT / ESPECIALLY AT 1940s ARTIST'S ENGRAVED SIGNATURE [ROBERT M. SCHWARTZ] ON STATUE TOWARD BASE; REPAIR AND REPLACE EXISTING DAMAGED TILES AT INTERIOR AND EXTERIOR FOUNTAIN SURFACES AS NEEDED; NEW TILES MUST MATCH EXACT COLOR, SIZE AND TEXTURE OF EXISTING TILE; RESTORE ALL PLASTER SURFACES TO NEW CONDITION; RESTORE AND UPGRADE LIGHTING AND FOUNTAIN TO NEW CONDITION; REFER TO TECHNICAL SPECIFICATIONS FOR MORE DETAIL ON RESTORATION PROCEDURES.

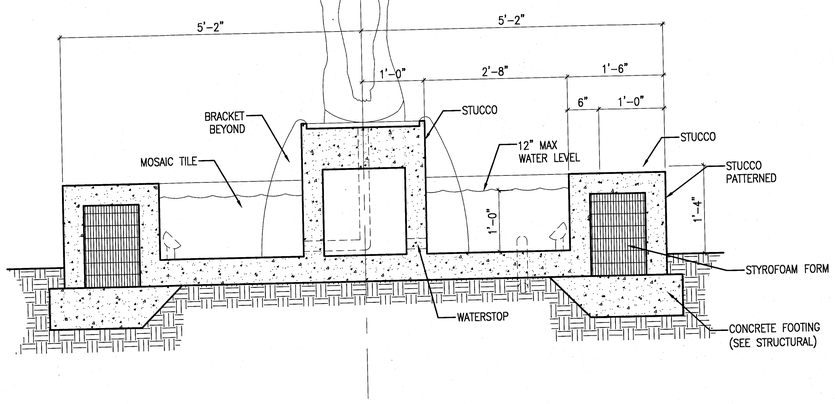

2 HADDON HALL – SECTION HISTORIC FOUNTAIN WITH STATUE
SCALE: 1" = 1'-0"

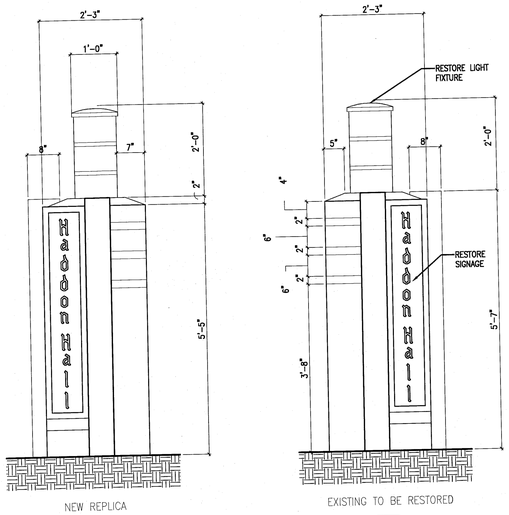

NEW REPLICA 1 | EXISTING TO BE RESTORED 2 | 3 | 4

5 HADDON HALL – ELEVATION HISTORIC PILLAR
SCALE: 1" = 1'-0"

APPROVED MIAMI BEACH FIRE DEPARTMENT

HADDON HALL
1500 COLLINS AVE
MIAMI BEACH, FL

KEYPLAN N.T.S.

REVISIONS

NO.	DESCRIPTION	ISSUE DATE
1	P&Z COMMENTS	07-14-2014

100% CONSTRUCTION DOCUMENT SET

SEAL

8-4-14
Jonathan Cardello
Lic. # AR93391

MTCI
PRIVATE PROVIDER SERVICES, LLC
Construction Plans Review, Inspections, Testing & Consulting

	REVIEWER INITIALS	DATE REVIEWED
BUILDING	EM	7-10-14
STRUCTURAL		
MECHANICAL		
ELECTRICAL		
PLUMBING		

ADD Inc Architecture Interiors Planning

One Biscayne Tower
Suite 1670
Two South
Biscayne Boulevard
Miami, Fl 33131
T. 305.482.8700
F. 305.482.8770
www.addinc.com
Lic. # AA26001507

Boston Miami

JOB NUMBER: 13036.00
CHECKED BY:
ISSUE DATE: FEBRUARY 18, 2014
SCALE: AS NOTED

SHEET TITLE

SITE DETAILS - HISTORIC FOUNTAIN, STATUE & PILLAR/ LANTERNS

SHEET NUMBER

A004

COPYRIGHT ADD INC 2011

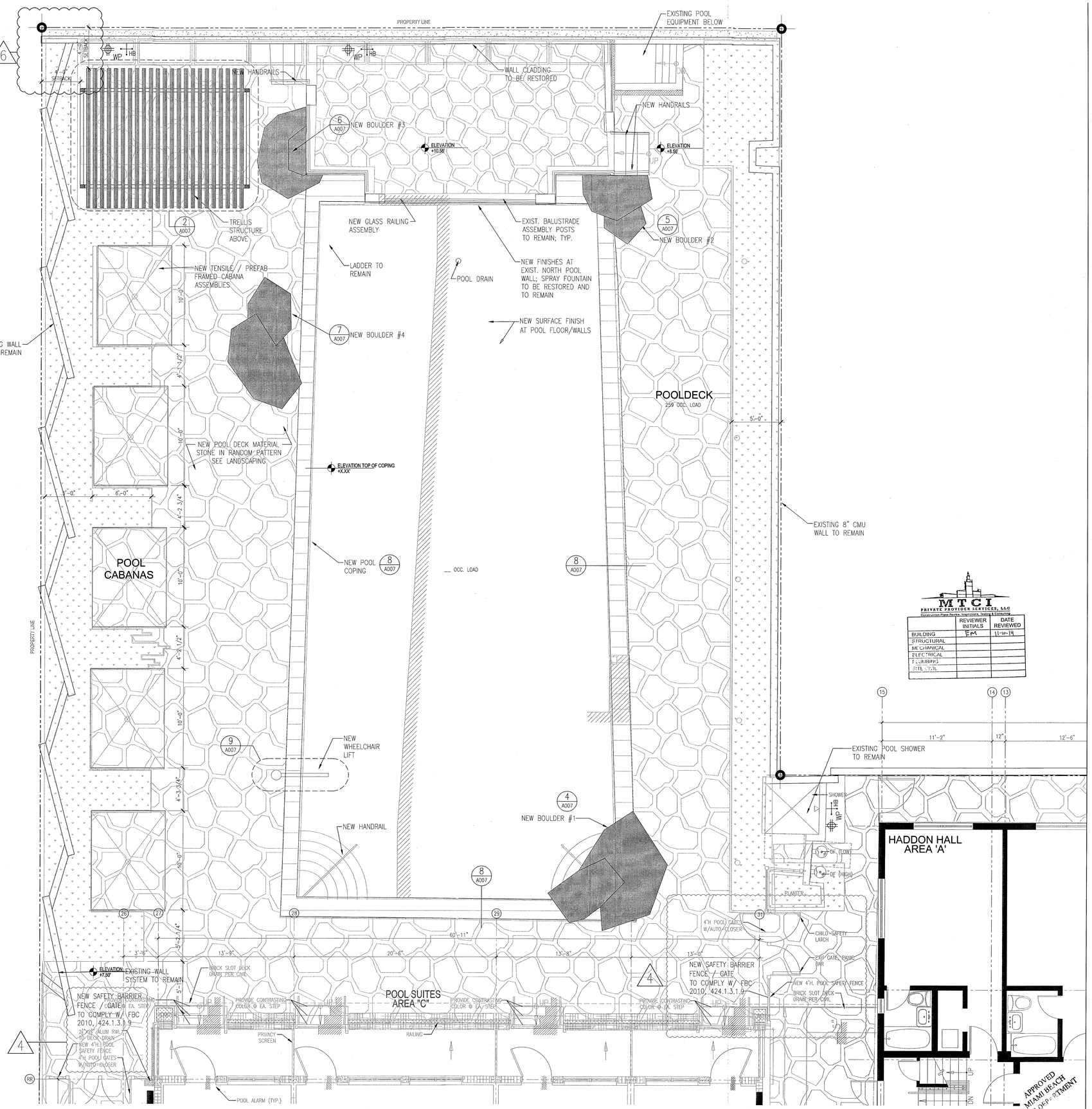

1 ENLARGED POOL DECK PLAN
SCALE: 1/4" = 1'-0"

MTCI
PRIVATE PROVIDER SERVICES, LLC
Construction Plans Review, Inspections, Testing & Contracting

	REVIEWER INITIALS	DATE REVIEWED
BUILDING	EM	11-10-14
STRUCTURAL		
MECHANICAL		
ELECTRICAL		
PLUMBING		
SITE CIVIL		

HADDON HALL
1500 COLLINS AVE

MIAMI BEACH, FL

KEYPLAN N.T.S.

REVISIONS

NO.	DESCRIPTION	ISSUE DATE
4	FIRE REVIEW COMMENTS	04-01-2014
5	P&Z COMMENTS	04-18-2014

100% CONSTRUCTION DOCUMENT SET

NORTH SEAL

Jonathan Cardello
Lic. # AR93391

ADD Inc Architecture Interiors Planning

One Biscayne Tower
Suite 1670
Two South
Biscayne Boulevard
Miami, Fl 33131
T. 305.482.8700
F. 305.482.8770
www.addinc.com
Lic. # AA26001507

Boston Miami

JOB NUMBER:	13036.00
CHECKED BY:	
ISSUE DATE:	FEBRUARY 18, 2014
SCALE:	1/4" = 1'-0"

SHEET TITLE

ENLARGED POOL DECK PLAN

SHEET NUMBER

A005

COPYRIGHT ADD INC 2011

1 ENLARGED ARCHITECTURAL SITE PLAN
SCALE: 3/16" = 1'-0"

HADDON HALL
1500 COLLINS AVE

MIAMI BEACH, FL

KEYPLAN N.T.S.

REVISIONS

NO.	DESCRIPTION	ISSUE DATE
1	P&Z COMMENTS	07-14-2014

100% CONSTRUCTION DOCUMENT SET

NORTH SEAL

Jonathan Cardello
Lic. # AR93391

ADD Inc Architecture Interiors Planning

One Biscayne Tower
Suite 1670
Two South
Biscayne Boulevard
Miami, Fl 33131
T. 305.482.8700
F. 305.482.8770
www.addinc.com
Lic. # AA26001507

Boston Miami

MTCI
PRIVATE PROVIDER SERVICES, LLC
Construction Plans Review, Inspections, Testing & Contracting

	REVIEWER INITIALS	DATE REVIEWED
BUILDING	EM	11-10-14
STRUCTURAL		
MECHANICAL		
ELECTRICAL		
PLUMBING		
CIVIL		

APPROVED
MIAMI BEACH
FIRE DEPARTMENT

JOB NUMBER:	13036.00
CHECKED BY:	
ISSUE DATE:	FEBRUARY 18, 2014
SCALE:	3/16" = 1'-0"

SHEET TITLE

ENLARGED ARCHITECTURAL SITE PLAN

SHEET NUMBER

A006

COPYRIGHT ADD INC 2011

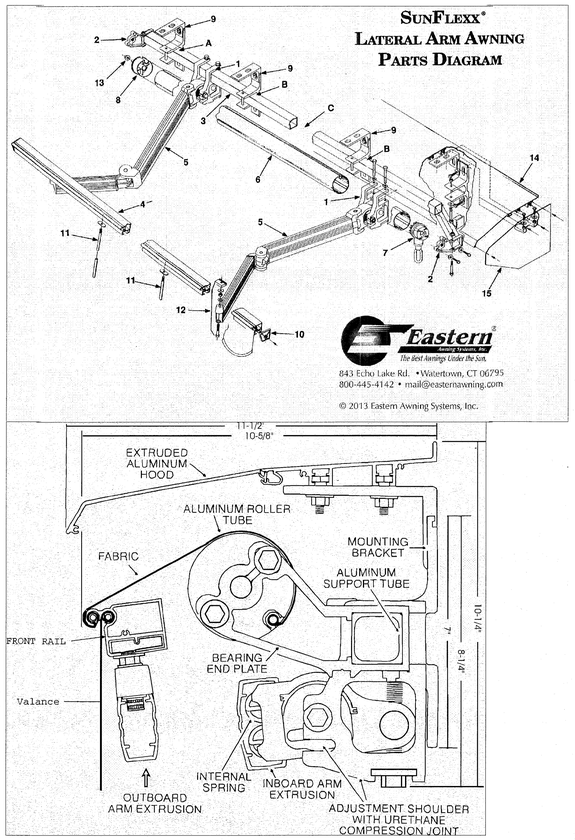

10 AWNING SPECIFICATION
SCALE: N.T.S.

7 NOT USED
SCALE: 1/2" = 1'-0"

6 NOT USED
SCALE: 1/2" = 1'-0"

5 NOT USED
SCALE: 1/2" = 1'-0"

4 NOT USED
SCALE: 1/2" = 1'-0"

POOL BOULDER GENERAL NOTES:

1. BOULDERS ARE TO BE CUSTOM FABRICATED OF 3/4" THICK POLYETHYLENE REINFORCED CONCRETE BY "URDL'S WATERFALL CREATIONS" DELRAY BEACH, FL. 561-278-3320, WWW.URDLS.NET
2. ONLY BOULDER PLANS HAVE BEEN PROVIDED FOR BIDDING. INTERIOR DESIGNER TO PROVIDE ADDITIONAL BOULDER 3-DIMENSION SHAPE INFO DURING CONSTRUCTION.
3. THE FABRICATED BOULDERS ARE TO LOOK & FEEL LIKE THE NATURAL STONE THAT THE INTERIOR DESIGNER SELECTS. THE INTERIOR DESIGNER TO PROVIDE STONE TYPE & COLOR TO MATCH.
4. BOULDERS ARE TO BE SUPPORTED ON THE POOL DECK PAVERS AND CANTILEVER OVER THE POOL COPING. FIELD-CUT & GROUT BOULDER IN-PLACE TO GIVE DESIGNER'S DESIRED APPEARANCE. THE BOULDERS SHALL BE ANCHORED IN-PLACE CAPABLE OF SUPPORTING, WITHOUT MOVING, NUMEROUS PEOPLE STANDING ANYWHERE ON THE BOULDER.
5. PROVIDE STRUCTURAL CALULATIONS SHOWING THAT THE BOULDERS & ANCHORAGE MEETS THE DESIGN INTENT.OF ITEM #4 ABOVE.

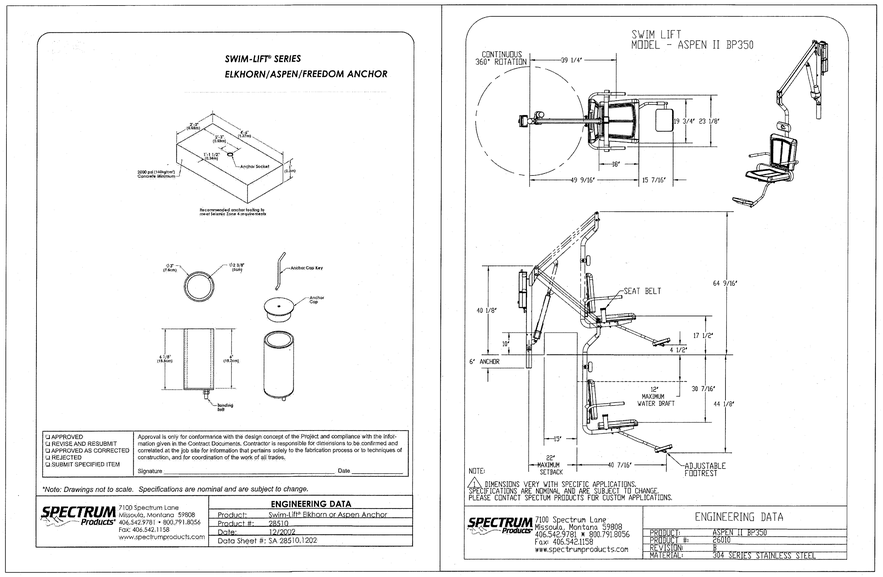

9 SPECTRUM-ASPEN II SWIM LIFT
SCALE: N.T.S.

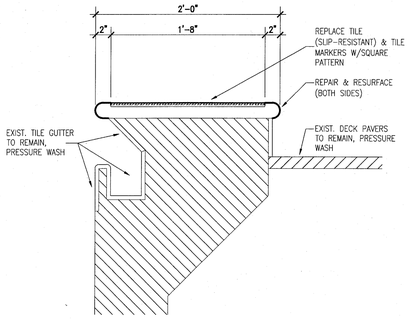

8 RE-TILE POOL COPING
SCALE: 1-1/2" = 1'-0"

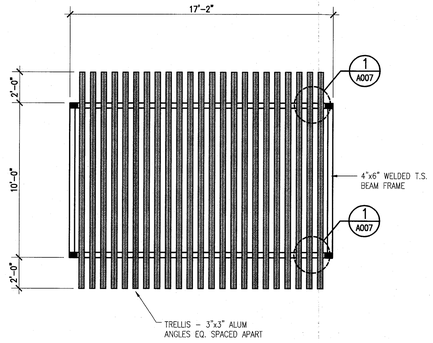

2 TRELLIS ROOF PLAN
SCALE: 1/4" = 1'-0"

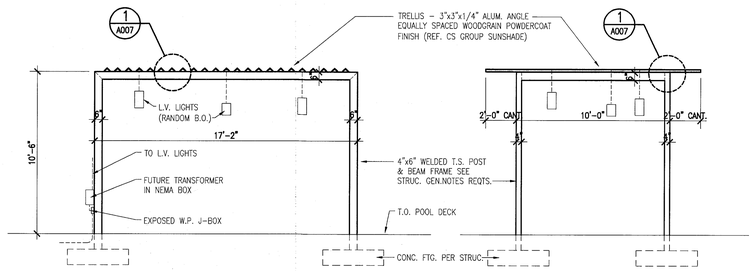

3 TRELLIS ELEVATIONS
SCALE: 1/4" = 1'-0"

MTCI
PRIVATE PROVIDER SERVICES, LLC
Construction Plans Review, Inspections, Testing & Consulting

	REVIEWER INITIALS	DATE REVIEWED
BUILDING	EM	11-10-14
STRUCTURAL		
MECHANICAL		
ELECTRICAL		
PLUMBING		
SITE PLAN		

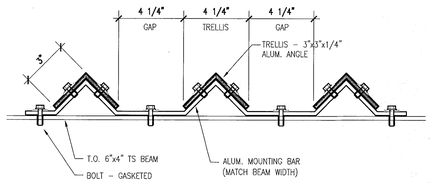

APPROVED MIAMI BEACH FIRE DEPARTMENT

1 TRELLIS MOUNTING DETAIL
SCALE: 3" = 1'-0"

HADDON HALL
1500 COLLINS AVE
MIAMI BEACH, FL

KEYPLAN N.T.S.

REVISIONS

NO.	DESCRIPTION	ISSUE DATE
1	PROGRESS TO 100% CD	02-18-2014
1	P&Z COMMENTS	07-14-2014

100% CONSTRUCTION DOCUMENT SET

SEAL

Jonathan Cardello
Lic. # AR93391

ADD Inc Architecture Interiors Planning

One Biscayne Tower
Suite 1670
Two South
Biscayne Boulevard
Miami, Fl 33131
T. 305.482.8700
F. 305.482.8770
www.addinc.com
Lic. # AA26001507

Boston Miami

JOB NUMBER: 13036.00
CHECKED BY:
ISSUE DATE: FEBRUARY 18, 2014
SCALE: VARIES

SHEET TITLE

MISCELLANEOUS SITE DETAILS

SHEET NUMBER

A007

COPYRIGHT ADD INC 2011

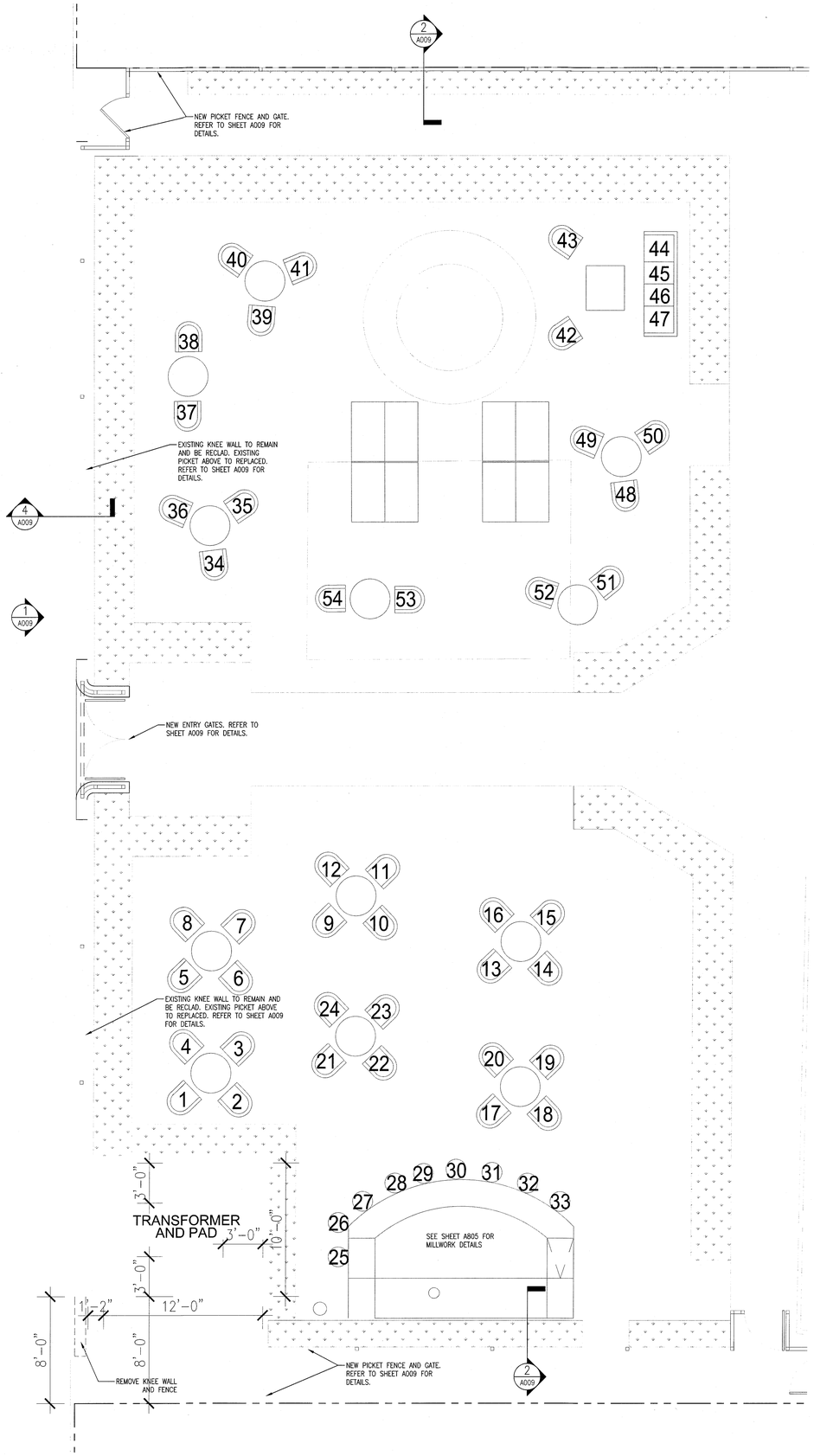

1 ENLARGED CAMPTON COURTYARD PLAN
SCALE: 1/4" = 1'-0"

FOOD & BEVERAGE SEATING CAPACITY

	SEATING [Qty. of chairs]		
	INDOOR	OUTDOOR	TOTALS
INDOOR/OUTDOOR RESTAURANT AT HADDON HALL AND CAMPTON APTS.	38	49	87
BAR/ COFFEE AT HADDON HALL	35	0	35
POOL & POOL DECK GROUND LEVEL	0	45	45
CAMPTON YARD AREA	0	54	54

NOTE:
- FOR OCCUPANCY LOAD CALCULATIONS REFER TO SHEET LS-101A
- NOTE FURNITURE ARE ALL LOOSE/MOVEABLE PIECES NOT TO BE ATTACHED TO THE FLOOR OR WALLS IN ANY WAY. TYPICAL AT ALL HISTORIC AREAS.

11

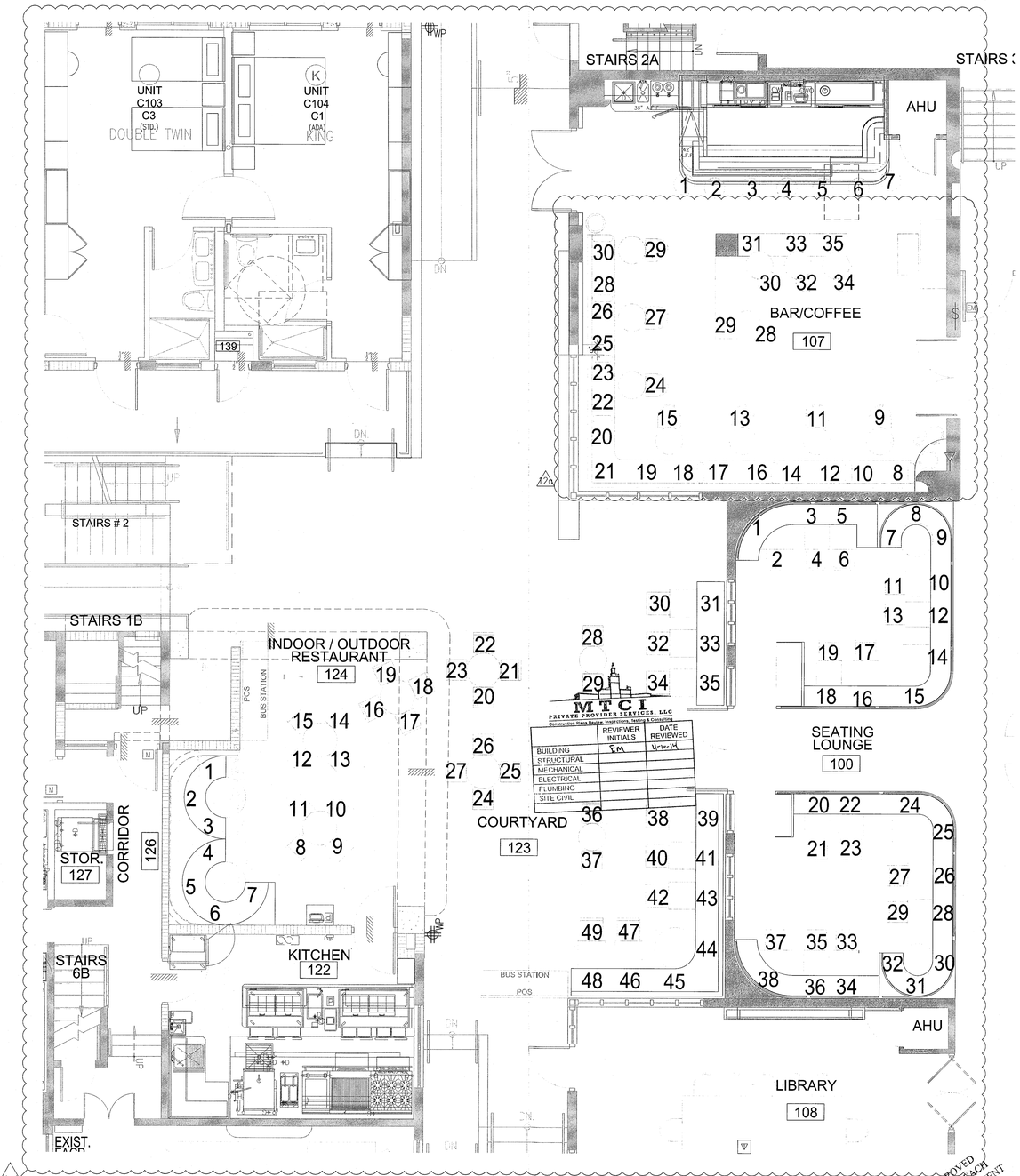

2 ENLARGED RESTAURANT/BAR SEATING PLAN
SCALE: 1/4" = 1'-0"

APPROVED MIAMI BEACH FIRE DEPARTMENT

HADDON HALL
1500 COLLINS AVE.
MIAMI BEACH, FL

KEYPLAN N.T.S.

REVISIONS

NO.	DESCRIPTION	ISSUE DATE
6	P&Z COMMENTS	04-18-2014
11	P&Z COMMENTS	07-14-2014
12a	FIRE PERMIT COMMENTS	09-29-2014

100% CONSTRUCTION DOCUMENT SET

NORTH SEAL

10-9-14
Jonathan Cardello
Lic. # AR93391

ADD Inc Architecture Interiors Planning

One Biscayne Tower
Suite 1670
Two South
Biscayne Boulevard
Miami, Fl 33131
T. 305.482.8700
F. 305.482.8770
www.addinc.com
Lic. # AA26001507

Boston Miami

JOB NUMBER:	13036.00
CHECKED BY:	
ISSUE DATE:	FEBRUARY 18, 2014
SCALE:	1/4" = 1'-0"

SHEET TITLE

ENLARGED ARCHITECTURAL SITE PLAN - CAMPTON YARD

SHEET NUMBER

A008 6

COPYRIGHT ADD INC 2011

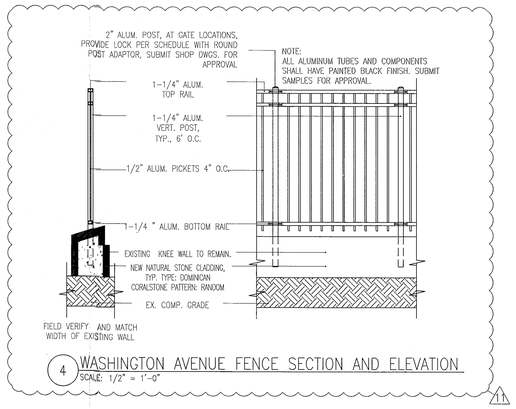

4 WASHINGTON AVENUE FENCE SECTION AND ELEVATION
SCALE: 1/2" = 1'-0"

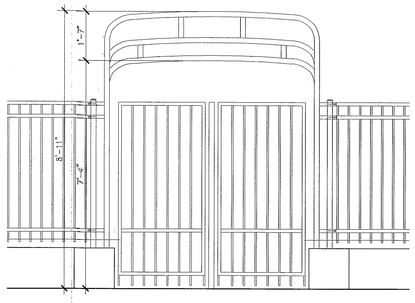

3 CAMPTON YARD GATE ELEVATION
SCALE: 1/2" = 1'-0"

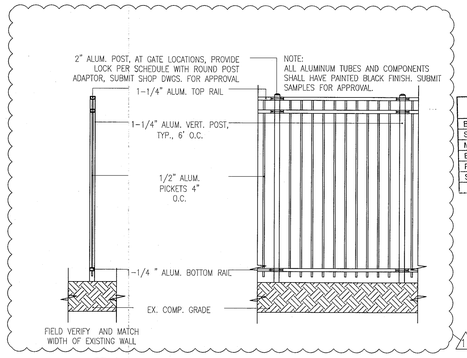

2 PROPERTY LINE FENCE SECTION AND ELEVATION
SCALE: 1/2" = 1'-0"

MTCI
PRIVATE PROVIDER SERVICES, LLC
Construction Plans Review, Inspections, Testing & Consulting

	REVIEWER INITIALS	DATE REVIEWED
BUILDING	EM	11-10-14
STRUCTURAL		
MECHANICAL		
ELECTRICAL		
PLUMBING		
SITE C/A		

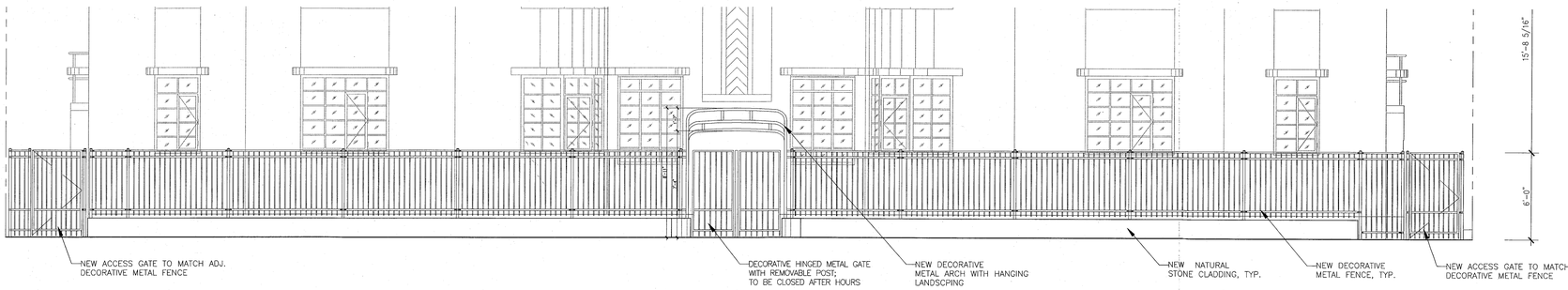

1 WASHINGTON AVENUE FENCE ELEVATION
SCALE: 1/4" = 1'-0"

APPROVED
MIAMI BEACH
FIRE DEPARTMENT

HADDON HALL
1500 COLLINS AVE

MIAMI BEACH, FL

KEYPLAN N.T.S.

REVISIONS

NO.	DESCRIPTION	ISSUE DATE
6	P&Z COMMENTS	04-18-2014
1	P&Z COMMENTS	07-14-2014

100% CONSTRUCTION DOCUMENT SET

NORTH SEAL

8-4-14
Jonathan Cardello
Lic. # AR93391

ADD Inc Architecture Interiors Planning

One Biscayne Tower
Suite 1670
Two South
Biscayne Boulevard
Miami, Fl 33131
T. 305.482.8700
F. 305.482.8770
www.addinc.com
Lic. # AA26001507

Boston Miami

JOB NUMBER: 13036.00
CHECKED BY:
ISSUE DATE: FEBRUARY 18, 2014
SCALE: 1/4" = 1'-0"

SHEET TITLE

SITE DETAILS - CAMPTON YARD

SHEET NUMBER

A009 6

COPYRIGHT ADD INC 2011

GENERAL NOTES

1. NOTIFY THE ARCHITECT OF ANY UNEXPECTED FIELD CONDITION OR ANY DISCREPANCY BEFORE PROCEEDING. GENERAL CONTRACTOR IS TO COORDINATE THE COMPLETE SCOPE OF WORK WITH CONSTRUCTION DOCUMENTS.
2. PROVIDE TEMPORARY SECURE ACCESS TO SPACE THROUGH CONSTRUCTION AND TEMPORARY LIGHT & POWER.
3. PROVIDE STRICT CONTROL OF JOB CLEANING AND PREVENT DUST AND DEBRIS FROM EMANATING FROM CONSTRUCTION AREA. GENERAL CONTRACTOR SHALL MAINTAIN THE PREMISES CLEAN AND FREE OF TRASH AND DEBRIS DURING CONSTRUCTION.
4. DAY AND SALT OFF ALL UNUSED UTILITIES PER CITY AND STATE REQUIREMENTS, WHERE REQUIRED.
5. PROVIDE TEMPORARY FIRE / SAFETY DEVICES THROUGHOUT CONSTRUCTION. SECURE DEVICES AS NECESSARY.
6. PROTECT ALL BASE BUILDING SURFACES, TYPICAL.
7. ALL REQUIREMENTS FOR FIRE RATINGS TO BE MAINTAINED DURING CONSTRUCTION.
8. THIS PROJECT INVOLVES CONSTRUCTION INSIDE AN EXISTING STRUCTURE. CONTRACTORS, BY SUBMITTING A BID, ARE DEEMED TO BE COMPLETELY FAMILIAR WITH THE EXISTING CONDITION OF THE BUILDING. AS IT INFLUENCES THE WORK DESCRIBED. ABSOLUTELY NO CLAIMS FOR EXTRA COMPENSATION WILL BE CONSIDERED FOR EXISTING CONDITIONS VISIBLE OR REASONABLY INFERABLE FROM A CAREFUL EXAMINATION OF THE EXISTING BLDG.
9. THE CONTRACTOR SHALL INSPECT THE EXISTING FIELD CONDITIONS AT THE SITE PRIOR TO THE START OF ANY WORK TO DETERMINE WHAT EFFECT THE EXISTING CONDITIONS WILL HAVE ON THEIR WORK. ANY POTENTIAL PROBLEM MUST BE BROUGHT TO THE ATTN. OF THE ARCHITECT AND/OR ENGINEER IMMEDIATELY.
10. SHUTDOWN OF EXISTING SYSTEMS FOR CONNECTION TO EXISTING SERVICES SHALL BE COORDINATED WITH THE CONSTRUCTION MANAGER AND BUILDING OWNER. THE CONTRACTOR SHALL SUBMIT REQUESTS, WHERE THEY AFFECT THE OPERATION OF THE BUILDING SYSTEMS, AT LEAST ONE WEEK IN ADVANCE OF ANY REQUIRED SHUTDOWN. THE ACTUAL SHUTDOWN PERIOD SHALL BE AS BRIEF AS POSSIBLE AND BE MUTUALLY AGREEABLE TO THE BUILDING OWNER AND THE CONSTRUCTION MANAGER.
11. ELECTRICAL DEVICES SHALL BE TERMINATED IN A NEAT AND PROPER METHOD BY A LICENSED PROFESSIONAL.
12. ALL WORK SHALL CONFORM WITH ALL APPLICABLE CITY, STATE, AND FEDERAL CODES AND REGULATIONS.
13. ARCHITECT TO REVIEW WALL LAYOUTS PRIOR TO CONSTRUCTION.
14. EXTREME CARE SHALL BE EXERCISED IN CUTTING, DRILLING, HACKSAWING, ETC. TO THE EXISTING STRUCTURE. IF ANY DEFORMATION, OR DAMAGE TO THE EXISTING STRUCTURE OCCURS DURING CONSTRUCTION, IT SHALL BE PROMPTLY BROUGHT TO THE ATTENTION OF THE ARCHITECT.
15. REFER TO ENGINEERING DRAWINGS FOR ALL POWER, DATA, MECHANICAL, PLUMBING & SECURITY RESPONSIBILITIES. SHOP DRAWINGS SHALL BE PROVIDED BY GENERAL CONTRACTOR TO COORDINATE WITH ARCHITECTURAL DOCUMENTS, AND TO NOTIFY ARCHITECT OF ANY DISCREPANCIES / CONFLICTS.
16. REFER TO STRUCTURAL DRAWINGS FOR ALL SLAB THICKNESS VARIANCES, TRANSITIONS, REFER LOCATIONS, AND OTHER STRUCTURAL SPECIFICATIONS. GENERAL CONTRACTOR TO COORDINATE WITH ARCHITECTURAL DOCUMENTS, AND TO NOTIFY ARCHITECT OF ANY DISCREPANCIES / CONFLICTS.
17. ANY NECESSARY FIRE EXTINGUISHERS ARE TO BE LOCATED IN RECESSED CABINETS WITH DOORS. COORDINATE LOCATIONS WITH ARCHITECT.
18. ALL EXISTING EXPOSED CMU BLOCK / CONCRETE AREAS (WALLS AND FLOORS) TO BE PATCHED, FILLED, AND SKIM COATED WITH NEW ANTI-CRACKING SUBSTRATE, AND SEALED.
19. ALL BATHROOMS AND WET AREAS TO RECEIVE 5/8" DURROCK ON WALLS AND CEILINGS.

SHEET NOTES

A. WALL MOUNTED TOILET TO AVOID CONFLICTS WITH RAISED SLABS BELOW
B. STORAGE ROOM TO BE AIR CONDITIONED
C. LIFT UNDER SEPARATE PERMIT
D. ALL INTERIOR FINISHES TO COMPLY WITH FBC CHAPTER 8. SEE G-012, SECTION F FOR DETAILS.
E. ALL WOOD USED THROUGHOUT SHALL BE INHERENTLY FIRE RESISTANT
F. ALL GUEST ROOM ENTRY DOORS AND CORRIDOR DOORS TO BE 1 HOUR RATED

LEGEND

- EXISTING PARTITION TO REMAIN
- NEW PARTITION
- NEW CMU PARTITION
- N.I.C. SWINGING
- EXISTING STRUCTURE
- CMU CEILING/SOFFIT
- EXISTING DOOR TO REMAIN
- DOOR NUMBER NEW DOOR
- ELEVATION REFERENCE
- DETAIL REFERENCE
- F.S. FLOOR SINK
- FD.-FLOOR DRAIN
- W.-WASTE OUTLET
- TD - TRENCH DRAIN
- LEVEL CHANGE

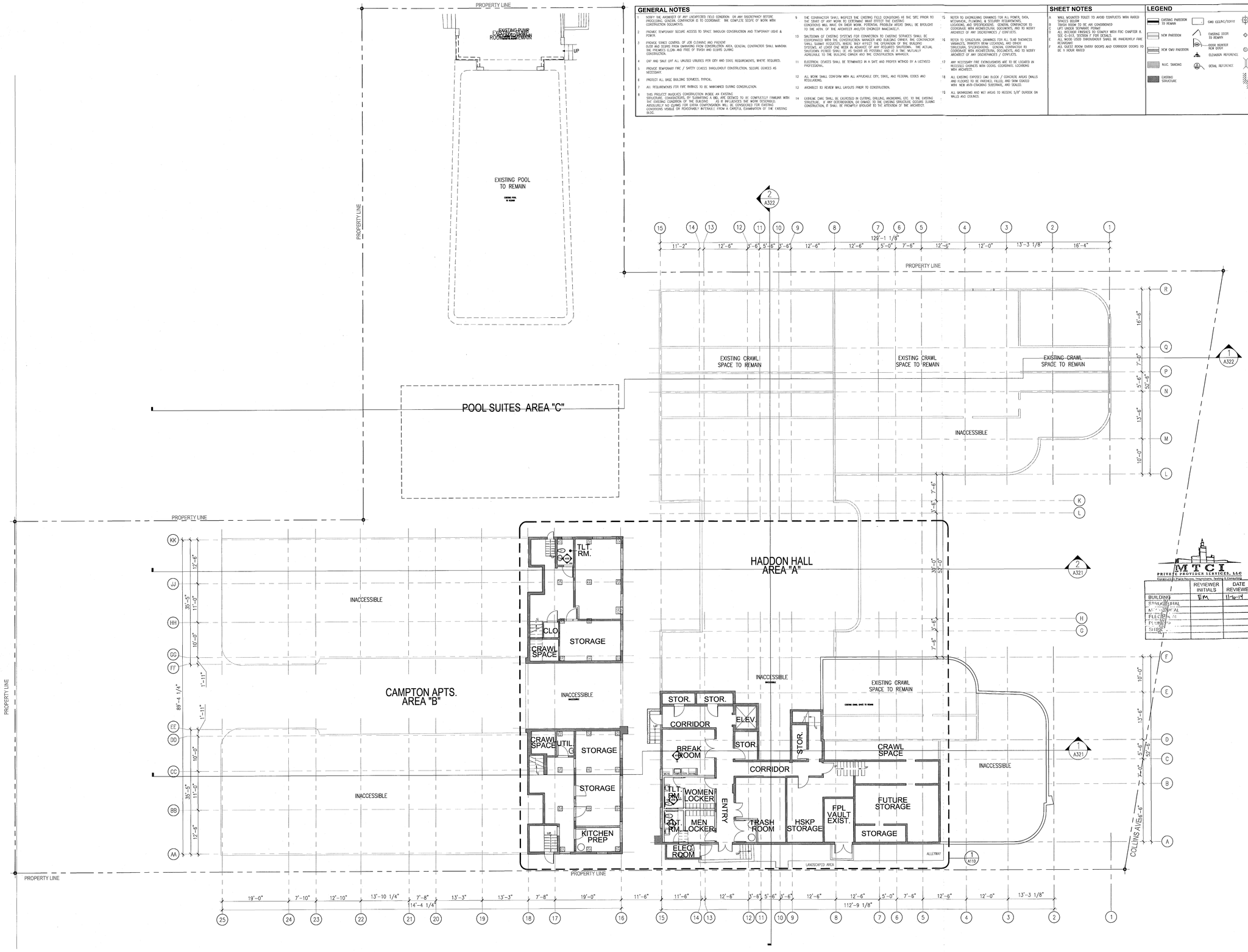

1 OVERALL BASEMENT FLOOR PLAN
SCALE: 3/32" = 1'-0"

HADDON HALL
1500 COLLINS AVE

MIAMI BEACH, FL

KEYPLAN N.T.S.

REVISIONS

NO.	DESCRIPTION	ISSUE DATE

MTCI PRIVATE PROVIDER SERVICES, LLC
Construction Plans Review, Inspections, Testing & Consulting

	REVIEWER INITIALS	DATE REVIEWED
BUILDING	EM	11-6-14
STRUCTURAL		
MECHANICAL		
ELECTRICAL		
PLUMBING		
SITE		

PERMIT SET

NORTH SEAL

Jonathan Cardello
Lic. # AR93391

ADD Inc Architecture Interiors Planning

One Biscayne Tower
Suite 1670
Two South
Biscayne Boulevard
Miami, Fl 33131
T. 305.482.8700
F. 305.482.8770
www.addinc.com
Lic. # AA26001507

Boston Miami

JOB NUMBER: 13036.00
CHECKED BY:
ISSUE DATE: JANUARY 24, 2014
SCALE: 3/32" = 1'-0"

SHEET TITLE

OVERALL BASEMENT FLOOR PLAN

SHEET NUMBER

A100

COPYRIGHT ADD INC 2011

APPROVED MIAMI BEACH FIRE DEPARTMENT

GENERAL NOTES

1. NOTIFY THE ARCHITECT OF ANY UNEXPECTED FIELD CONDITION OR ANY DISCREPANCY BEFORE PROCEEDING. GENERAL CONTRACTOR IS TO COORDINATE THE COMPLETE SCOPE OF WORK WITH CONSTRUCTION DOCUMENTS.
2. PROVIDE TEMPORARY SECURE ACCESS TO SPACE THROUGH CONSTRUCTION AND TEMPORARY LIGHT & POWER.
3. PROVIDE STRICT CONTROL OF JOB CLEANING AND FIREFIGHT DUST AND DEBRIS FROM EMANATING FROM CONSTRUCTION AREA. GENERAL CONTRACTOR SHALL MAINTAIN THE PREMISES CLEAN AND FREE OF TRASH AND DEBRIS DURING CONSTRUCTION.
4. CAP AND SHUT OFF ALL UNUSED UTILITIES PER CITY AND STATE REQUIREMENTS, WHERE REQUIRED.
5. PROVIDE TEMPORARY FIRE / SAFETY DEVICES THROUGHOUT CONSTRUCTION. SECURE DEVICES AS NECESSARY.
6. PROTECT ALL BUILDING SERVICES, TYPICAL.
7. ALL REQUIREMENTS FOR FIRE RATINGS TO BE MAINTAINED DURING CONSTRUCTION.
8. THIS PROJECT INVOLVES CONSTRUCTION INSIDE AN EXISTING STRUCTURE. CONTRACTORS, BY SUBMITTING A BID, ARE DEEMED TO BE COMPLETELY FAMILIAR WITH THE EXISTING CONDITION OF THE BUILDING. AS IS INFLUENCES THE WORK DESCRIBED, IMPLICITLY NO CLAIMS FOR EXTRA COMPENSATION WILL BE CONSIDERED FOR EXISTING CONDITIONS VISIBLE OR REASONABLY INFERABLE FROM A CAREFUL EXAMINATION OF THE EXISTING BLDG.
9. THE CONTRACTOR SHALL INSPECT THE EXISTING FIELD CONDITIONS AT THE SITE PRIOR TO THE START OF ANY WORK TO DETERMINE WHAT EFFECT THE EXISTING CONDITIONS WILL HAVE ON THEIR WORK. POTENTIAL PROBLEM AREAS SHALL BE BROUGHT TO THE ATTN. OF THE ARCHITECT AND/OR ENGINEER IMMEDIATELY.
10. SHUTDOWN OF EXISTING SYSTEMS FOR CONNECTION TO EXISTING SERVICES SHALL BE COORDINATED WITH THE CONSTRUCTION MANAGER AND BUILDING OWNER. THE CONTRACTOR SHALL SUBMIT REQUESTS, WHERE THEY AFFECT THE OPERATION OF THE BUILDING SYSTEMS, AT LEAST ONE WEEK IN ADVANCE OF ANY REQUIRED SHUTDOWN. THE ACTUAL SHUTDOWN SHALL BE SCHEDULED TO MINIMIZE DISRUPTION AND BE MUTUALLY AGREEABLE TO THE BUILDING OWNER AND THE CONSTRUCTION MANAGER.
11. ELECTRICAL DEVICES SHALL BE TERMINATED IN A SAFE AND PROPER METHOD BY A LICENSED PROFESSIONAL.
12. ALL WORK SHALL CONFORM WITH ALL APPLICABLE CITY, STATE, AND FEDERAL CODES AND REGULATIONS.
13. ARCHITECT TO REVIEW WALL LAYOUTS PRIOR TO CONSTRUCTION.
14. EXTREME CARE SHALL BE EXERCISED IN CUTTING, DRILLING, ANCHORING, ETC. TO THE EXISTING STRUCTURE. IF ANY DETERIORATION, OR DAMAGE TO THE EXISTING STRUCTURE OCCURS DURING CONSTRUCTION, IT SHALL BE PROMPTLY BROUGHT TO THE ATTENTION OF THE ARCHITECT.
15. REFER TO ENGINEERING DRAWINGS FOR ALL POWER, DATA, MECHANICAL, PLUMBING, & SECURITY REQUIREMENTS, LOCATIONS, AND SPECIFICATIONS. GENERAL CONTRACTOR TO COORDINATE WITH ARCHITECTURAL DOCUMENTS, AND TO NOTIFY ARCHITECT OF ANY DISCREPANCIES / CONFLICTS.
16. REFER TO STRUCTURAL DRAWINGS FOR ALL SLAB THICKNESS VARIANCES, TRANSFER BEAM LOCATIONS, AND OTHER STRUCTURAL SPECIFICATIONS. GENERAL CONTRACTOR TO COORDINATE WITH ARCHITECTURAL DOCUMENTS, AND TO NOTIFY ARCHITECT OF ANY DISCREPANCIES / CONFLICTS.
17. ANY NECESSARY FIRE EXTINGUISHERS ARE TO BE LOCATED IN RECESSED CABINETS WITH DOORS. COORDINATE LOCATIONS WITH ARCHITECT.
18. ALL EXISTING EXPOSED CMU BLOCK / CONCRETE AREAS (WALLS AND FLOORS) TO BE PATCHED, FILLED, AND SKIM COATED WITH NEW ANTI-CRACKING SUBSTRATE, AND SEALED.
19. ALL BATHROOMS AND WET AREAS TO RECEIVE 5/8" DUROCK ON WALLS AND CEILINGS.
20. RETROGRAM LIVE RISERS TO RUN IN CHASE 2 HR RATED GYP CHASE FIRESWEEL/SMOKESTOPPING AT FLOOR PENETRATIONS.

SHEET NOTES

A. WALL MOUNTED TOILET TO AVOID CONFLICTS WITH RATED SPACES BELOW
B. TRASH ROOM TO BE AIR CONDITIONED
C. LIFT UNDER SEPARATE PERMIT
D. ALL INTERIOR FINISHES TO COMPLY WITH FBC CHAPTER 8, SEE G-010, SECTION 7 FOR DETAILS.
E. ALL WOOD USED THROUGHOUT SHALL BE INHERENTLY FIRE RETARDANT
F. ALL GUEST ROOM ENTRY DOORS AND CORRIDOR DOORS TO BE 1 HOUR RATED

LEGEND

- EXISTING PARTITION TO REMAIN
- NEW PARTITION
- NEW CMU PARTITION
- N.I.C. SHADING
- EXISTING STRUCTURE
- CMU CEILING/SOFFIT
- EXISTING DOOR TO REMAIN
- DOOR NUMBER NEW DOOR
- ELEVATION REFERENCE
- DETAIL REFERENCE
- HOSE BIB
- F.S. FLOOR SINK
- FD.-FLOOR DRAIN
- W.-WASTE OUTLET
- TD - TRENCH DRAIN
- LEVEL CHANGE

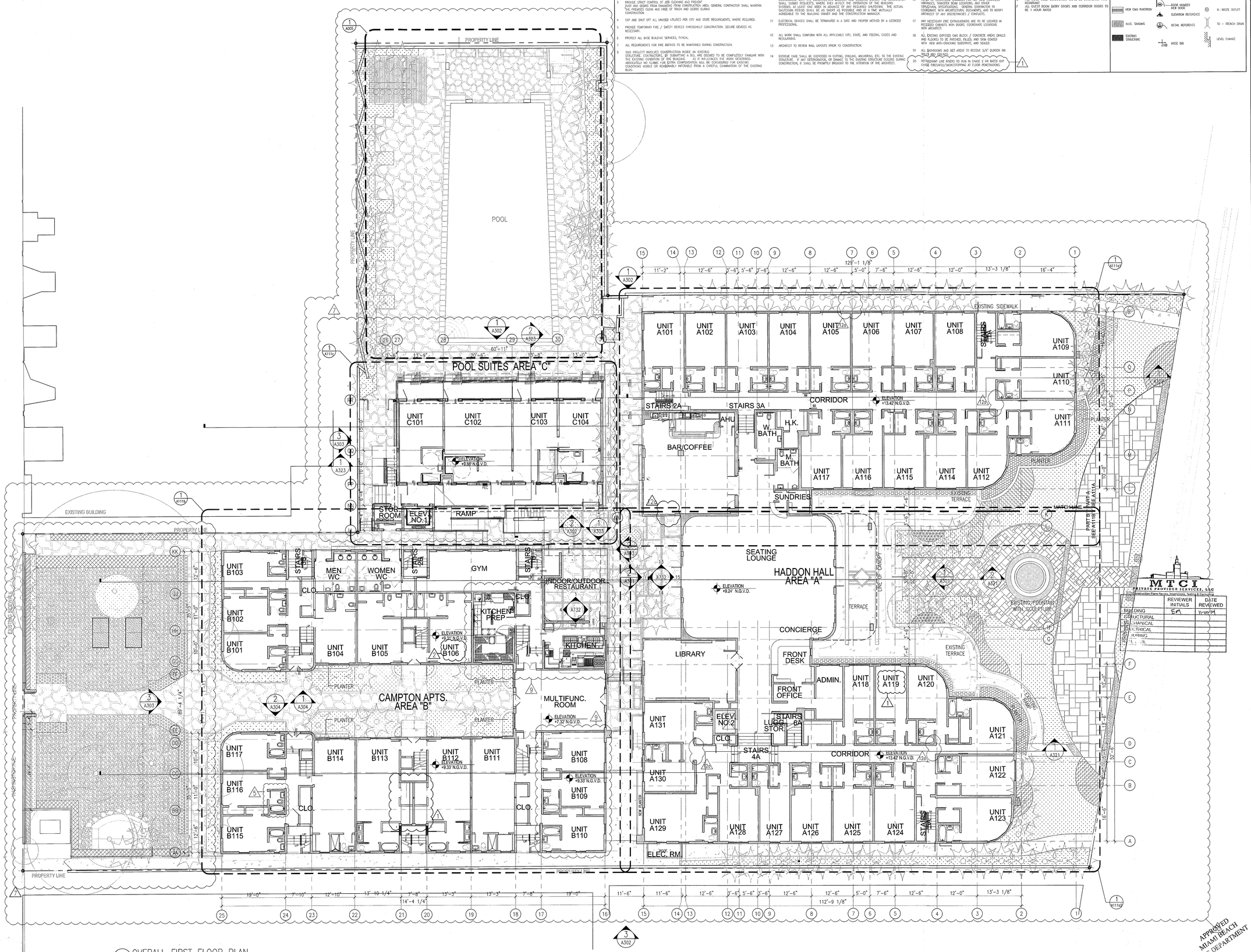

1 OVERALL FIRST FLOOR PLAN
SCALE: 3/32" = 1'-0"

MTCI
PRIVATE PROVIDER SERVICES, LLC
Building Inspection Plans Review, Inspections, Testing & Consulting

BUILDING	REVIEWER INITIALS	DATE REVIEWED
STRUCTURAL	EM	11-10-14
MECHANICAL		
ELECTRICAL		
PLUMBING		
FIRE		

APPROVED MIAMI BEACH FIRE DEPARTMENT

HADDON HALL
1500 COLLINS AVE
MIAMI BEACH, FL

KEYPLAN N.T.S.

REVISIONS

NO.	DESCRIPTION	ISSUE DATE
1	PROGRESS TO 100% CD	02-18-2014
2	PERMIT REVIEW COMMENTS	03-14-2014
5	GUESTROOM COORDINATION	04-17-2014
7	POOL SUITES WALLS	04-14-2014
9	KITCHEN REINFORCEMENT	05-30-2014
10	MASTER PERMIT COMMENTS	07-03-2014
12	FIRE PERMIT COMMENTS	09-29-2014

100% CONSTRUCTION DOCUMENT SET

NORTH SEAL

10-9-14
Jonathan Cardello
Lic. # AR93391

ADD Inc Architecture Interiors Planning

One Biscayne Tower
Suite 1670
Two South
Biscayne Boulevard
Miami, Fl 33131
T. 305.482.8700
F. 305.482.8770
www.addinc.com
Lic. # AA26001507

Boston Miami

JOB NUMBER: 13036.00
CHECKED BY:
ISSUE DATE: FEBRUARY 18, 2014
SCALE: 3/32" = 1'-0"

SHEET TITLE

OVERALL FIRST FLOOR PLAN

SHEET NUMBER

A101

COPYRIGHT ADD INC 2011

GENERAL NOTES

1. NOTIFY THE ARCHITECT OF ANY UNEXPECTED FIELD CONDITION OR ANY DISCREPANCY BEFORE PROCEEDING. GENERAL CONTRACTOR IS TO COORDINATE THE COMPLETE SCOPE OF WORK WITH CONSTRUCTION DOCUMENTS.
2. PROVIDE TEMPORARY SECURE ACCESS TO SPACE THROUGH CONSTRUCTION AND TEMPORARY LIGHT & POWER.
3. PROVIDE STRICT CONTROL OF JOB CLEANING AND PREVENT DUST AND DEBRIS FROM EMANATING FROM CONSTRUCTION AREA. GENERAL CONTRACTOR SHALL MAINTAIN THE PREMISES CLEAN AND FREE OF TRASH AND DEBRIS DURING CONSTRUCTION.
4. CAP AND SHUT OFF ALL UNUSED UTILITIES PER CITY AND STATE REQUIREMENTS, WHERE REQUIRED.
5. PROVIDE TEMPORARY FIRE / SAFETY DEVICES THROUGHOUT CONSTRUCTION. SECURE DEVICES AS NECESSARY.
6. PROTECT ALL BASIC BUILDING SERVICES, TYPICAL.
7. ALL REQUIREMENTS FOR FIRE RATINGS TO BE MAINTAINED DURING CONSTRUCTION.
8. THIS PROJECT INVOLVES CONSTRUCTION INSIDE AN EXISTING STRUCTURE. CONTRACTORS, BY SUBMITTING A BID, ARE DEEMED TO BE COMPLETELY FAMILIAR WITH THE EXISTING CONDITION OF THE BUILDING. AS IT INFLUENCES THE WORK DESCRIBED. ABSOLUTELY NO CLAIMS FOR EXTRA COMPENSATION WILL BE CONSIDERED FOR EXISTING CONDITIONS VISIBLE OR REASONABLY INFERABLE FROM A CAREFUL EXAMINATION OF THE EXISTING BLDG.
9. THE CONTRACTOR SHALL INSPECT THE EXISTING FIELD CONDITIONS AT THE SITE PRIOR TO THE START OF ANY WORK TO DETERMINE WHAT EFFECT THE EXISTING CONDITIONS WILL HAVE ON THEIR WORK. POTENTIAL PROBLEM AREAS SHALL BE BROUGHT TO THE ATTN. OF THE ARCHITECT AND/OR ENGINEER IMMEDIATELY.
10. SHUTDOWN OF EXISTING SYSTEMS FOR CONNECTION TO EXISTING SERVICES SHALL BE COORDINATED WITH THE BUILDING MANAGEMENT AND OWNER. GENERAL CONTRACTOR SHALL SUBMIT REQUESTS, WHERE THEY AFFECT THE OPERATION OF THE BUILDING SYSTEMS, AT LEAST ONE WEEK IN ADVANCE OF ANY REQUIRED SHUTDOWN. THE ACTUAL SHUTDOWN PERIOD SHALL BE AS SHORT AS POSSIBLE AND AT A TIME MUTUALLY AGREEABLE TO THE BUILDING OWNER AND THE CONSTRUCTION MANAGER.
11. ELECTRICAL DEVICES SHALL BE TERMINATED IN A SAFE AND PROPER METHOD BY A LICENSED PROFESSIONAL.
12. ALL WORK SHALL CONFORM WITH ALL APPLICABLE CITY, STATE, AND FEDERAL CODES AND REGULATIONS.
13. ARCHITECT TO REVIEW WALL LAYOUTS PRIOR TO CONSTRUCTION.
14. EXTREME CARE SHALL BE EXERCISED IN CUTTING, DRILLING, ANCHORING, ETC. TO THE EXISTING STRUCTURE. IF ANY DETERIORATION, OR DAMAGE TO THE EXISTING STRUCTURE OCCURS DURING CONSTRUCTION, IT SHALL BE PROMPTLY BROUGHT TO THE ATTENTION OF THE ARCHITECT.
15. REFER TO ENGINEERING DRAWINGS FOR ALL POWER, DATA, MECHANICAL, PLUMBING, & SECURITY REQUIREMENTS, LOCATIONS, AND SPECIFICATIONS. GENERAL CONTRACTOR TO COORDINATE WITH ARCHITECTURAL DOCUMENTS, AND TO NOTIFY ARCHITECT OF ANY DISCREPANCIES / CONFLICTS.
16. REFER TO STRUCTURAL DRAWINGS FOR ALL SLAB THICKNESS VARIANCES, TRANSFER BEAM LOCATIONS, AND OTHER STRUCTURAL SPECIFICATIONS. GENERAL CONTRACTOR TO COORDINATE WITH ARCHITECTURAL DOCUMENTS, AND TO NOTIFY ARCHITECT OF ANY DISCREPANCIES / CONFLICTS.
17. ANY NECESSARY FIRE EXTINGUISHERS ARE TO BE LOCATED IN RECESSED CABINETS WITH DOORS. COORDINATE LOCATIONS WITH ARCHITECT.
18. ALL EXISTING EXPOSED CMU BLOCK / CONCRETE AREAS (WALLS AND FLOORS) TO BE PATCHED, FILLED, AND SKIM COATED WITH NON ANTI-CHIGGING SUBSTRATE, AND SEALED.
19. ALL BATHROOMS AND WET AREAS TO RECEIVE 5/8" DURAROCK ON WALLS AND CEILINGS.
20. PATHOGENIC LINE RISERS TO RUN IN CHASE 2 HR RATED GYP CHASE, FIRECAVITY/SMOKESTOPPING AT FLOOR PENETRATIONS.

SHEET NOTES

A. WALL MOUNTED TOILET TO AVOID CONFLICTS WITH RATED SPACES BELOW
B. TRASH ROOM TO BE AIR CONDITIONED
C. LIFT UNDER SEPARATE PERMIT
D. ALL INTERIOR FINISHES TO COMPLY WITH FBC CHAPTER 8. SEE G-012, SECTION F FOR DETAILS.
E. ALL WOOD USED THROUGHOUT SHALL BE INHERENTLY FIRE RETARDANT.
F. ALL GUEST ROOM ENTRY DOORS AND CORRIDOR DOORS TO BE 1 HOUR RATED

LEGEND

- EXISTING PARTITION TO REMAIN
- NEW PARTITION
- NEW CMU PARTITION
- MLLC. SHADOWS
- EXISTING STRUCTURE
- CMU CEILING/SOFFIT
- EXISTING DOOR TO REMAIN
- DOOR NUMBER NEW DOOR
- ELEVATION REFERENCE
- DETAIL REFERENCE
- HOSE BIB
- F.S. FLOOR SINK
- FD.-FLOOR DRAIN
- W.-WASTE OUTLET
- TD - TRENCH DRAIN
- LEVEL CHANGE

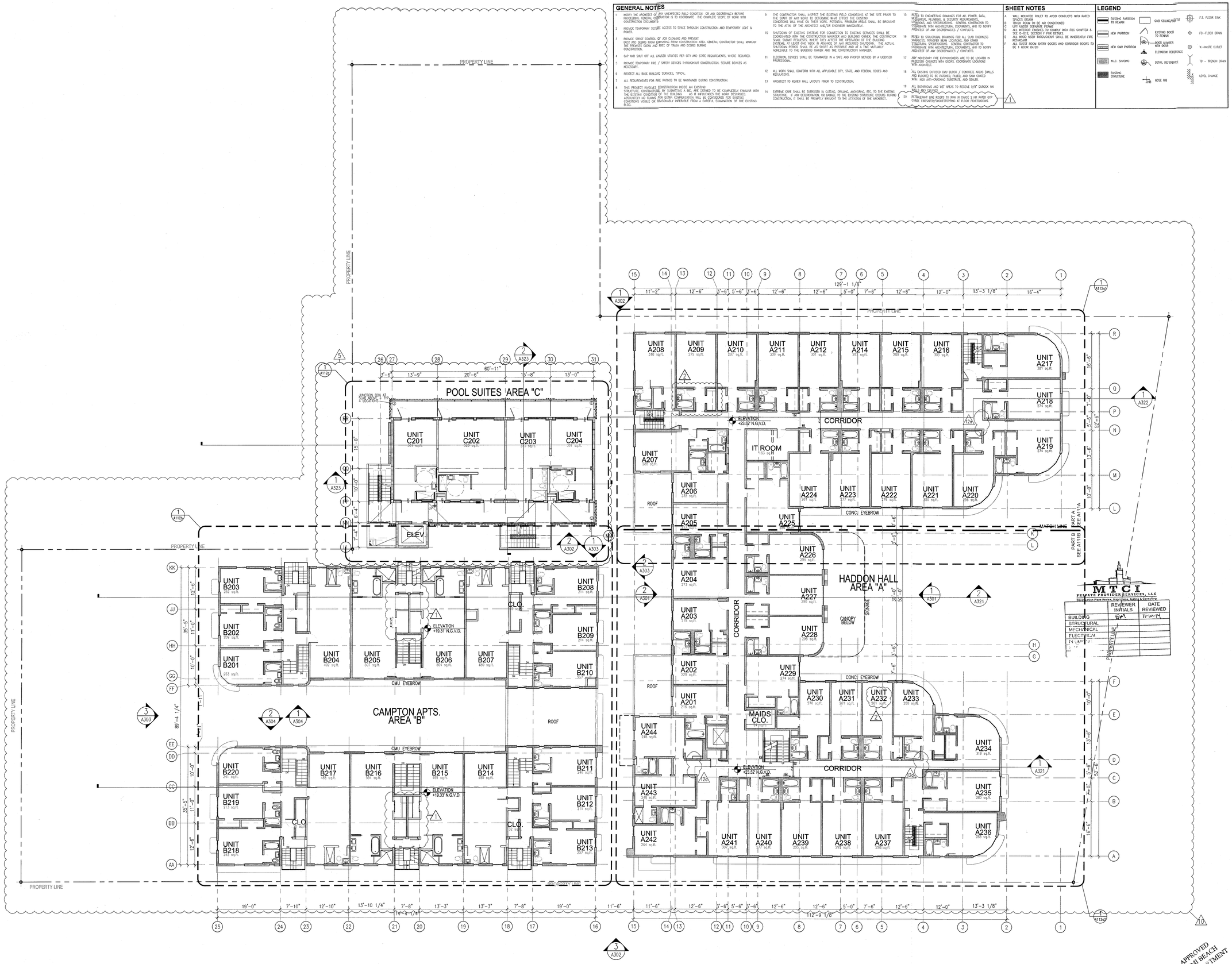

MTCI
PRIVATE PROVIDER SERVICES, LLC
Construction Plans Review, Inspections, Testing & Consulting

	REVIEWER INITIALS	DATE REVIEWED
BUILDING	EWM	11-10-14
STRUCTURAL		
MECHANICAL		
ELECTRICAL		
PLUMBING		

APPROVED MIAMI BEACH FIRE DEPARTMENT

HADDON HALL
1500 COLLINS AVE
MIAMI BEACH, FL

KEYPLAN N.T.S.

REVISIONS

NO.	DESCRIPTION	ISSUE DATE
1	PROGRESS TO 100% CD	02-18-2014
2	PERMIT REVIEW COMMENTS	03-14-2014
3	GUESTROOM COORDINATION	03-14-2014
10	MASTER PERMIT COMMENTS	07-03-2014
12	FIRE PERMIT COMMENTS	09-29-2014

100% CONSTRUCTION DOCUMENT SET

NORTH SEAL

Jonathan Cardello
Lic. # AR93391

ADD Inc Architecture Interiors Planning

One Biscayne Tower
Suite 1670
Two South
Biscayne Boulevard
Miami, Fl 33131
T. 305.482.8700
F. 305.482.8770
www.addinc.com
Lic. # AA26001507

Boston Miami

JOB NUMBER: 13036.00
CHECKED BY:
ISSUE DATE: FEBRUARY 18, 2014
SCALE: 3/32" = 1'-0"

SHEET TITLE

ARCHITECTURAL SECOND FLOOR PLAN

SHEET NUMBER

A102

COPYRIGHT ADD INC 2011

GENERAL NOTES

1. NOTIFY THE ARCHITECT OF ANY UNEXPECTED FIELD CONDITION OR ANY DISCREPANCY BEFORE PROCEEDING. GENERAL CONTRACTOR IS TO COORDINATE THE COMPLETE SCOPE OF WORK WITH CONSTRUCTION DOCUMENTS.
2. PROVIDE TEMPORARY SECURE ACCESS TO SPACE THROUGH CONSTRUCTION AND TEMPORARY LIGHT & POWER.
3. PROVIDE STRICT CONTROL OF JOB CLEANING AND PREVENT DUST AND DEBRIS FROM EMANATING FROM CONSTRUCTION AREA. GENERAL CONTRACTOR SHALL MAINTAIN THE PREMISES CLEAN AND FREE OF TRASH AND DEBRIS DURING CONSTRUCTION.
4. CAP AND SHUT OFF ALL UNUSED UTILITIES PER CITY AND STATE REQUIREMENTS, WHERE REQUIRED.
5. PROVIDE TEMPORARY FIRE / SAFETY DEVICES THROUGHOUT CONSTRUCTION. SECURE DEVICES AS NECESSARY.
6. PROTECT ALL BASE BUILDING SERVICES, TYPICAL.
7. ALL REQUIREMENTS FOR FIRE RATINGS TO BE MAINTAINED DURING CONSTRUCTION.
8. THIS PROJECT INVOLVES CONSTRUCTION INSIDE AN EXISTING STRUCTURE. CONTRACTORS, BY SUBMITTING A BID, ARE DEEMED TO BE COMPLETELY FAMILIAR WITH THE EXISTING CONDITIONS OF THE BUILDING. AS IT INFLUENCES THE WORK DESCRIBED. ABSOLUTELY NO CLAIMS FOR EXTRA COMPENSATION WILL BE CONSIDERED FOR EXISTING CONDITIONS VISIBLE OR REASONABLY INFERABLE FROM A CAREFUL EXAMINATION OF THE EXISTING BLDG.
9. THE CONTRACTOR SHALL INSPECT THE EXISTING FIELD CONDITIONS AT THE SITE PRIOR TO THE START OF ANY WORK TO DETERMINE WHAT EFFECT THE EXISTING CONDITIONS WILL HAVE ON THEIR WORK. POTENTIAL PROBLEM AREAS SHALL BE BROUGHT TO THE ATTN. OF THE ARCHITECT AND/OR ENGINEER IMMEDIATELY.
10. SHUTDOWNS OF EXISTING SYSTEMS FOR CONNECTION TO EXISTING SERVICES SHALL BE COORDINATED WITH THE CONSTRUCTION MANAGER AND BUILDING OWNER. THE CONTRACTOR SHALL SUBMIT REQUESTS, WHERE THEY AFFECT THE OPERATION OF THE BUILDING, 48 HOURS PRIOR TO THE TIME OF SHUTDOWN. UNLESS OTHERWISE INDICATED, THE ACTUAL SHUTDOWN PERIOD SHALL BE AS SHORT AS POSSIBLE AND AT A TIME MUTUALLY AGREEABLE TO THE BUILDING OWNER AND THE CONSTRUCTION MANAGER.
11. ELECTRICAL DEVICES SHALL BE TERMINATED IN A SAFE AND PROPER METHOD BY A LICENSED PROFESSIONAL.
12. ALL WORK SHALL CONFORM WITH ALL APPLICABLE CITY, STATE, AND FEDERAL CODES AND REGULATIONS.
13. ARCHITECT TO REVIEW WALL LAYOUTS PRIOR TO CONSTRUCTION.
14. EXTREME CARE SHALL BE EXERCISED IN CUTTING, DRILLING, ANCHORING, ETC. TO THE EXISTING STRUCTURE. IF ANY DETERIORATION, OR DAMAGE TO THE EXISTING STRUCTURE OCCURS DURING CONSTRUCTION, IT SHALL BE PROMPTLY BROUGHT TO THE ATTENTION OF THE ARCHITECT.
15. REFER TO ENGINEERING DRAWINGS FOR ALL POWER, DATA, MECHANICAL EQUIPMENT, EMERGENCY REQUIREMENTS, LOCATIONS, AND SPECIFICATIONS. GENERAL CONTRACTOR TO COORDINATE WITH ARCHITECTURAL DOCUMENTS, AND TO NOTIFY ARCHITECT OF ANY DISCREPANCIES / CONFLICTS.
16. REFER TO STRUCTURAL DRAWINGS FOR ALL SLAB THICKNESS VARIANCES, TURNDOWN BEAM LOCATIONS, AND OTHER STRUCTURAL SPECIFICATIONS. GENERAL CONTRACTOR TO COORDINATE WITH ARCHITECTURAL DOCUMENTS, AND TO NOTIFY ARCHITECT OF ANY DISCREPANCIES / CONFLICTS.
17. ADD NECESSARY FIRE EXTINGUISHERS ARE TO BE LOCATED IN RECESSED CABINETS WITH DOORS. COORDINATE LOCATIONS WITH ARCHITECT.
18. ALL EXISTING EXPOSED CMU BLOCK / CONCRETE AREAS (WALLS AND FLOORS) TO BE PATCHED, FILLED, AND SKIM COATED WITH NEW ANTI-SMOKING SUBSTRATE, AND SEALED.
19. ALL BATHROOMS AND WET AREAS TO RECEIVE 5/8" DURAROCK ON WALLS AND CEILINGS.
20. RETROFIT NEW FIREFRS TO RUN IN GWB'S 2 HR RATED CHASE FIREWRED/SMOKESTOPPING AT FLOOR PENETRATIONS.

SHEET NOTES

A. WALL MOUNTED TOILET TO AVOID CONFLICTS WITH RATED WALL ASSEMBLY.
B. TRASH ROOM TO BE AIR CONDITIONED
C. LEFT UNDER SEPARATE PERMIT
D. ALL INTERIOR FINISHES TO COMPLY WITH FBC CHAPTER 8, SEE G-012, SECTION F FOR DETAILS.
E. ALL WOOD USED THROUGHOUT SHALL BE INHERENTLY FIRE RETARDANT
F. ALL GUEST ROOM ENTRY DOORS AND CORRIDOR DOORS TO BE 1 HOUR RATED

LEGEND

- EXISTING PARTITION TO REMAIN
- NEW PARTITION
- NEW CMU PARTITION
- M.E.C. SHAFTS
- EXISTING STRUCTURE
- GWB CEILING/SOFFIT
- EXISTING DOOR TO REMAIN
- DOOR NUMBER NEW DOOR
- ELEVATION REFERENCE
- DETAIL REFERENCE
- NOISE BIB
- F.S. FLOOR SINK
- FD.-FLOOR DRAIN
- W.-WASTE OUTLET
- TD - TRENCH DRAIN
- LEVEL CHANGE

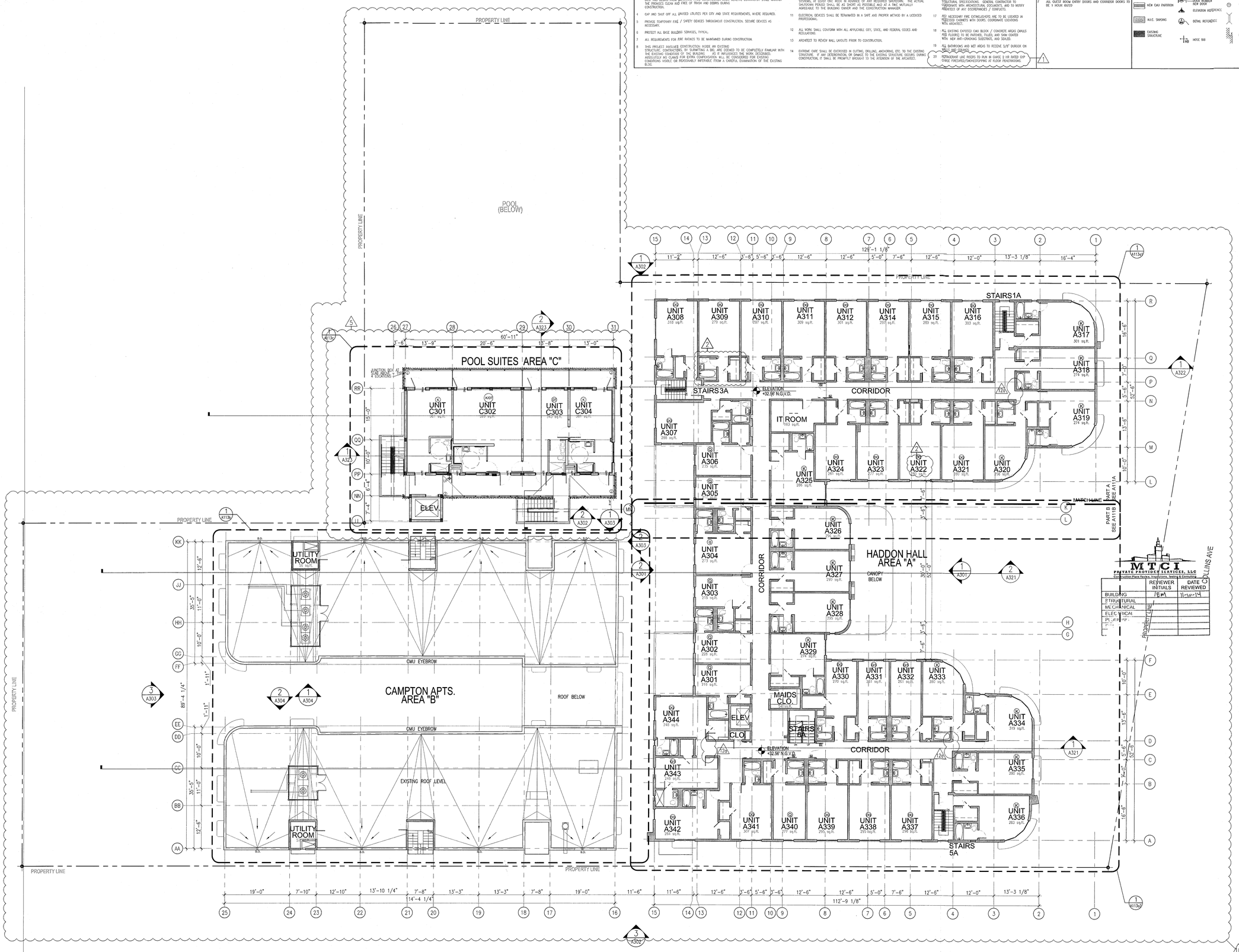

HADDON HALL
1500 COLLINS AVE
MIAMI BEACH, FL

KEYPLAN N.T.S.

REVISIONS		
NO.	DESCRIPTION	ISSUE DATE
1	PROGRESS TO 100% CD	02-18-2014
2	PERMIT REVIEW COMMENTS	03-14-2014
5	GUESTROOM COORDINATION	03-14-2014
10	MASTER PERMIT COMMENTS	07-03-2014
12	FIRE PERMIT COMMENTS	09-29-2014

100% CONSTRUCTION DOCUMENT SET

NORTH SEAL

10-9-14
Jonathan Cardello
Lic. # AR93391

ADD Inc Architecture Interiors Planning

One Biscayne Tower
Suite 1670
Two South
Biscayne Boulevard
Miami, Fl 33131
T. 305.482.8700
F. 305.482.8770
www.addinc.com
Lic. # AA26001507

Boston Miami

JOB NUMBER:	13036.00
CHECKED BY:	
ISSUE DATE:	FEBRUARY 18, 2014
SCALE:	3/32" = 1'-0"

SHEET TITLE

ARCHITECTURAL THIRD FLOOR PLAN

SHEET NUMBER

A103

APPROVED MIAMI BEACH FIRE DEPARTMENT

COPYRIGHT ADD INC 2011

GENERAL NOTES

1. NOTIFY THE ARCHITECT OF ANY UNEXPECTED FIELD CONDITION OR ANY DISCREPANCY BEFORE PROCEEDING. GENERAL CONTRACTOR IS TO COORDINATE THE COMPLETE SCOPE OF WORK WITH CONSTRUCTION DOCUMENTS.
2. PROVIDE TEMPORARY SECURE ACCESS TO SPACE THROUGH CONSTRUCTION AND TEMPORARY LIGHT & POWER.
3. PROVIDE STRICT CONTROL OF JOB CLEANING AND PREVENT DUST AND DEBRIS FROM EMPARTING FROM CONSTRUCTION AREA. GENERAL CONTRACTOR SHALL MAINTAIN THE PREMISES CLEAN AND FREE OF TRASH AND DEBRIS DURING CONSTRUCTION.
4. CAP AND SHUT OFF ALL UNUSED UTILITIES PER CITY AND STATE REQUIREMENTS, WHERE REQUIRED.
5. PROVIDE TEMPORARY FIRE / SAFETY DEVICES THROUGHOUT CONSTRUCTION. SECURE DEVICES AS NECESSARY.
6. PROTECT ALL BASE BUILDING SERVICES, TYPICAL.
7. ALL REQUIREMENTS FOR FIRE RATINGS TO BE MAINTAINED DURING CONSTRUCTION.
8. THIS PROJECT INVOLVES CONSTRUCTION INSIDE AN EXISTING BUILDING. THE CONTRACTOR SHALL BE EXPECTED TO BE DEEMED TO BE COMPLETELY FAMILIAR WITH THE EXISTING CONDITION OF THE BUILDING AS IT INFLUENCES THE WORK DESCRIBED. ABSOLUTELY NO CLAIMS FOR EXTRA COMPENSATION WILL BE CONSIDERED FOR EXISTING CONDITIONS VISIBLE OR REASONABLY INFERABLE FROM A CAREFUL EXAMINATION OF THE EXISTING BLDG.
9. THE CONTRACTOR SHALL INSPECT THE EXISTING FIELD CONDITIONS AT THE SITE PRIOR TO THE START OF ANY WORK TO DETERMINE WHAT EFFECT THE EXISTING CONDITIONS WILL HAVE ON THEIR WORK. POTENTIAL PROBLEM AREAS SHALL BE BROUGHT TO THE ATTN. OF THE ARCHITECT AND/OR ENGINEER IMMEDIATELY.
10. SHUTDOWN OF EXISTING SYSTEMS FOR CONNECTION TO EXISTING SERVICES SHALL BE COORDINATED WITH THE CONSTRUCTION MANAGER AND BUILDING OWNER. THE CONTRACTOR SHALL SUBMIT REQUESTS, WHERE THEY AFFECT THE OPERATION OF THE BUILDING SYSTEMS, AT LEAST ONE WEEK IN ADVANCE OF ANY REQUIRED SHUTDOWN. THE ACTUAL SHUTDOWN PERIOD SHALL BE AS SHORT AS POSSIBLE AND AT A TIME MUTUALLY AGREEABLE TO THE BUILDING OWNER AND THE CONSTRUCTION MANAGER.
11. ELECTRICAL DEVICES SHALL BE TERMINATED IN A SAFE AND PROPER METHOD BY A LICENSED PROFESSIONAL.
12. ALL WORK SHALL CONFORM WITH ALL APPLICABLE CITY, STATE, AND FEDERAL CODES AND REGULATIONS.
13. ARCHITECT TO REVIEW WALL LAYOUTS PRIOR TO CONSTRUCTION.
14. EXTREME CARE SHALL BE EXERCISED IN CUTTING, DRILLING, ANCHORING, ETC. TO THE EXISTING STRUCTURE. IF ANY DETERIORATION, OR DAMAGE TO THE EXISTING STRUCTURE OCCURS DURING CONSTRUCTION, IT SHALL BE PROMPTLY BROUGHT TO THE ATTENTION OF THE ARCHITECT.
15. REFER TO ENGINEERING DRAWINGS FOR ALL POWER, DATA, MECHANICAL, PLUMBING, & SECURITY REQUIREMENTS, LOCATIONS, AND SPECIFICATIONS. GENERAL CONTRACTOR TO COORDINATE WITH ARCHITECTURAL DOCUMENTS, AND TO NOTIFY ARCHITECT OF ANY DISCREPANCIES / CONFLICTS.
16. REFER TO STRUCTURAL DRAWINGS FOR ALL SLAB THICKNESS VARIANCES, TRANSFER BEAM LOCATIONS, AND OTHER STRUCTURAL SPECIFICATIONS. GENERAL CONTRACTOR TO COORDINATE WITH ARCHITECTURAL DOCUMENTS, AND TO NOTIFY ARCHITECT OF ANY DISCREPANCIES / CONFLICTS.
17. ANY NECESSARY FIRE EXTINGUISHERS ARE TO BE LOCATED IN RECESSED CABINETS WITH DOORS. COORDINATE LOCATIONS WITH ARCHITECT.
18. ALL EXISTING EXPOSED CMU BLOCK / CONCRETE AREAS (WALLS AND FLOORS) TO BE PATCHED, FILLED, AND SKIM COATED WITH NEW ANTI-CRACKING SUBSTRATE, AND SEALED.
19. ALL BATHROOMS AND WET AREAS TO RECEIVE 5/8" DURIOCK ON WALLS AND CEILINGS.
20. REFRIGERANT LINE RISERS TO RUN IN CHASE 2 HR RATED CYP CHASE FIRESTATS/SMOKESTOPPING AT FLOOR PENETRATIONS.

SHEET NOTES

A. WALL MOUNTED TOILET TO AVOID CONFLICTS WITH RATED WALL ASSEMBLY.
B. TRASH ROOM TO BE AIR CONDITIONED
C. LIFT UNDER SEPARATE PERMIT
D. ALL INTERIOR FINISHES TO COMPLY WITH FBC CHAPTER 8; SEE G-012, SECTION F FOR DETAILS.
E. ALL WOOD USED THROUGHOUT SHALL BE INHERENTLY FIRE RETARDANT
F. ALL GUEST ROOM ENTRY DOORS AND CORRIDOR DOORS TO BE 1 HOUR RATED

LEGEND

- EXISTING PARTITION TO REMAIN
- NEW PARTITION
- NEW CMU PARTITION
- N.I.C. SHADING
- EXISTING STRUCTURE
- CMU COLUMN/SOFFITE
- EXISTING DOOR TO REMAIN
- DOOR NUMBER NEW DOOR
- ELEVATION REFERENCE
- DETAIL REFERENCE
- HOSE BIB
- F.S. FLOOR SINK
- FD.-FLOOR DRAIN
- W.-WASTE OUTLET
- TD - TRENCH DRAIN
- LEVEL CHANGE

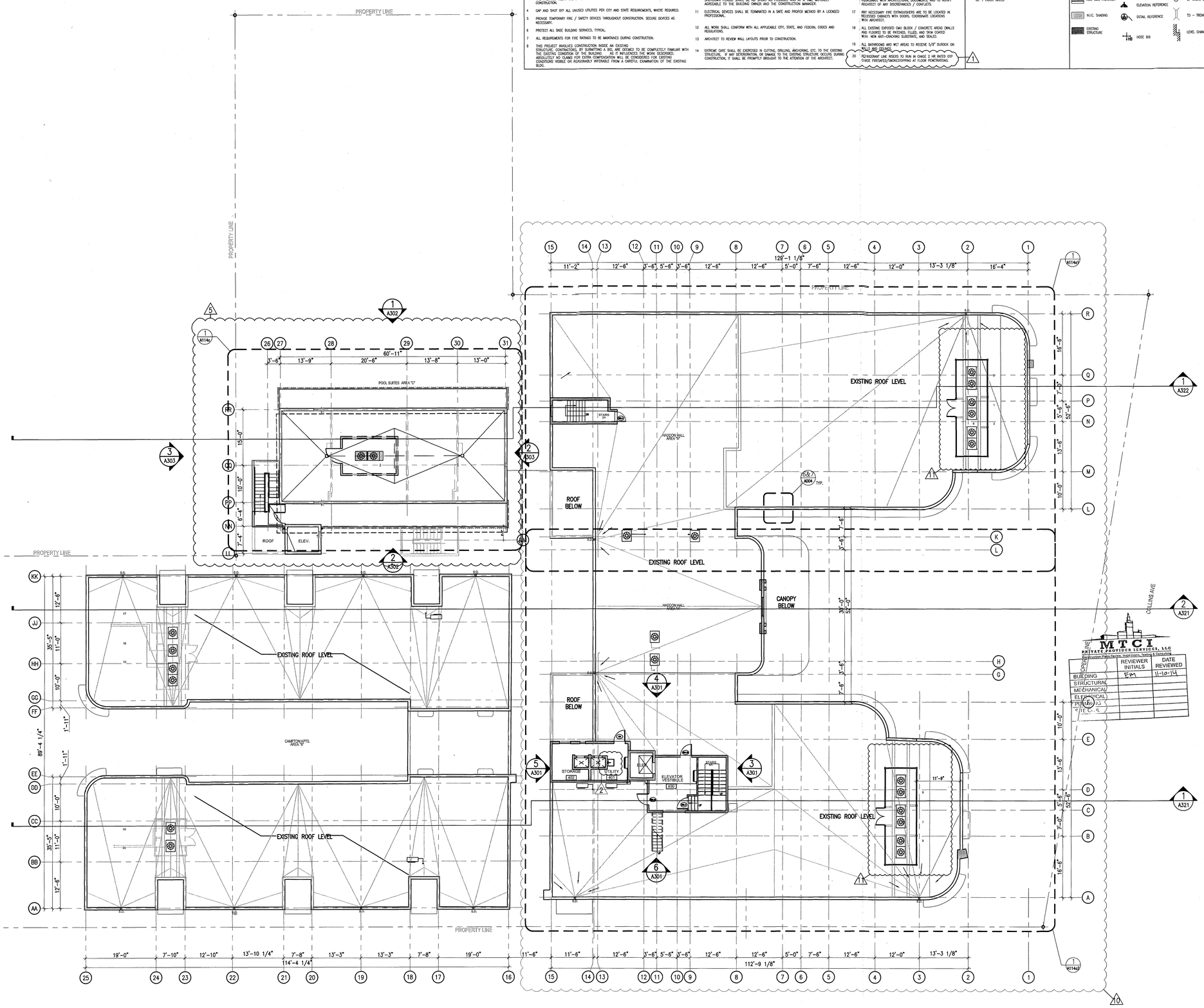

1 OVERALL ROOF FLOOR PLAN
SCALE: 3/32" = 1'-0"

HADDON HALL
1500 COLLINS AVE
MIAMI BEACH, FL

KEYPLAN N.T.S.

REVISIONS

NO.	DESCRIPTION	ISSUE DATE
1	PROGRESS TO 100% CD	02-18-2014
2	PERMIT REVIEW COMMENTS	03-14-2014
10	MASTER PERMIT COMMENTS	07-03-2014
11	P&Z COMMENTS	07-14-2014

100% CONSTRUCTION DOCUMENT SET

NORTH SEAL

Jonathan Cardello
Lic. # AR93391
9.3.14

MTCI
PRIVATE PROVIDER SERVICES, LLC
Professional Plans Review, Inspections, Testing & Consulting

DISCIPLINE	REVIEWER INITIALS	DATE REVIEWED
BUILDING	EM	11-10-14
STRUCTURAL		
MECHANICAL		
ELECTRICAL		
PLUMBING		
F.P.C.O.		

ADD Inc Architecture Interiors Planning

One Biscayne Tower
Suite 1670
Two South
Biscayne Boulevard
Miami, Fl 33131
T. 305.482.8700
F. 305.482.8770
www.addinc.com
Lic. # AA26001507

Boston Miami

JOB NUMBER: 13036.00
CHECKED BY:
ISSUE DATE: FEBRUARY 18, 2014
SCALE: 3/32" = 1'-0"

SHEET TITLE

OVERALL ROOF FLOOR PLAN

SHEET NUMBER

A104

COPYRIGHT ADD INC 2011

APPROVED MIAMI BEACH FIRE DEPARTMENT

GENERAL NOTES

1. NOTIFY THE ARCHITECT OF ANY UNEXPECTED FIELD CONDITION OR ANY DISCREPANCY BEFORE PROCEEDING. GENERAL CONTRACTOR IS TO COORDINATE THE COMPLETE SCOPE OF WORK WITH CONSTRUCTION DOCUMENTS.
2. PROVIDE TEMPORARY SECURE ACCESS TO SPACE THROUGH CONSTRUCTION AND TEMPORARY LIGHT & POWER.
3. PROVIDE STRICT CONTROL OF JOB CLEANING AND PREVENT DUST AND DEBRIS FROM EMANATING FROM CONSTRUCTION AREA. GENERAL CONTRACTOR SHALL MAINTAIN THE PREMISES CLEAN AND FREE OF TRASH AND DEBRIS DURING CONSTRUCTION.
4. CAP AND SHUT OFF ALL UNUSED UTILITIES PER CITY AND STATE REQUIREMENTS, WHERE REQUIRED.
5. PROVIDE TEMPORARY FIRE / SAFETY DEVICES THROUGHOUT CONSTRUCTION. SECURE DEVICES AS NECESSARY.
6. PROTECT ALL BASE BUILDING SERVICES, TYPICAL.
7. ALL REQUIREMENTS FOR FIRE RATINGS TO BE MAINTAINED DURING CONSTRUCTION.
8. THIS PROJECT INVOLVES CONSTRUCTION INSIDE AN EXISTING STRUCTURE. CONTRACTORS, BY SUBMITTING A BID, ARE DEEMED TO BE COMPLETELY FAMILIAR WITH THE EXISTING CONDITION OF THE BUILDING. AS IT INFLUENCES THE WORK DESCRIBED. ABSOLUTELY NO CLAIMS FOR EXTRA COMPENSATION WILL BE CONSIDERED FOR EXISTING CONDITIONS VISIBLE OR REASONABLY INFERABLE FROM A CAREFUL EXAMINATION OF THE EXISTING BLDG.
9. THE CONTRACTOR SHALL INSPECT THE EXISTING FIELD CONDITIONS AT THE SITE PRIOR TO THE START OF ANY WORK TO DETERMINE WHAT EFFECT THE EXISTING CONDITIONS WILL HAVE ON THEIR WORK. POTENTIAL PROBLEM AREAS SHALL BE BROUGHT TO THE ATTN. OF THE ARCHITECT AND/OR ENGINEER IMMEDIATELY.
10. SHUTDOWN OF EXISTING SYSTEMS FOR CONNECTION TO EXISTING SERVICES SHALL BE COORDINATED WITH THE CONSTRUCTION MANAGER AND BUILDING OWNER. THE CONTRACTOR SHALL SUBMIT REQUESTS, WHERE THEY AFFECT THE OPERATION OF THE BUILDING SYSTEMS, AT LEAST ONE WEEK IN ADVANCE OF ANY REQUIRED SHUTDOWN. THE ACTUAL SHUTDOWN PERIOD SHALL BE AS SHORT AS POSSIBLE AND AT A TIME MUTUALLY AGREEABLE TO THE BUILDING OWNER AND THE CONSTRUCTION MANAGER.
11. ELECTRICAL DEVICES SHALL BE TERMINATED IN A SAFE AND PROPER METHOD BY A LICENSED PROFESSIONAL.
12. ALL WORK SHALL CONFORM WITH ALL APPLICABLE CITY, STATE, AND FEDERAL CODES AND REGULATIONS.
13. ARCHITECT TO REVIEW WALL LAYOUTS PRIOR TO CONSTRUCTION.
14. EXTREME CARE SHALL BE EXERCISED IN CUTTING, DRILLING, ANCHORING, ETC. TO THE EXISTING STRUCTURE. IF ANY DETERIORATION, OR DAMAGE TO THE EXISTING STRUCTURE OCCURS DURING CONSTRUCTION, IT SHALL BE PROMPTLY BROUGHT TO THE ATTENTION OF THE ARCHITECT.
15. REFER TO ENGINEERING DRAWINGS FOR ALL POWER, DATA, MECHANICAL, PLUMBING, & SECURITY REQUIREMENTS, LOCATIONS, AND SPECIFICATIONS. GENERAL CONTRACTOR TO COORDINATE WITH ARCHITECTURAL DOCUMENTS, AND TO NOTIFY ARCHITECT OF ANY DISCREPANCIES / CONFLICTS.
16. REFER TO STRUCTURAL DRAWINGS FOR ALL SLAB THICKNESS VARIANCES, TRANSFER BEAM LOCATIONS, AND OTHER STRUCTURAL SPECIFICATIONS. GENERAL CONTRACTOR TO COORDINATE WITH ARCHITECTURAL DOCUMENTS, AND TO NOTIFY ARCHITECT OF ANY DISCREPANCIES / CONFLICTS.
17. ANY NECESSARY FIRE EXTINGUISHERS ARE TO BE LOCATED IN RECESSED CABINETS WITH DOORS. COORDINATE LOCATIONS WITH ARCHITECT.
18. ALL EXISTING EXPOSED CMU BLOCK / CONCRETE AREAS (WALLS AND FLOORS) TO BE PATCHED, FILLED, AND SKIM COATED WITH NEW ANTI-CRACKING SUBSTRATE, AND SEALED.
19. ALL BATHROOMS AND WET AREAS TO RECEIVE 5/8" DUROCK ON WALLS AND CEILINGS.
20. REFRIGERANT LINE RISERS TO RUN IN CHASE 1 HR RATED (VIP. CHASE FIRESAFED)/SMOKESTOPPING AT FLOOR PENETRATIONS.

SHEET NOTES

A. WALL MOUNTED TOILET TO AVOID CONFLICTS WITH RATED SPACES BELOW
B. TRASH ROOM TO BE AIR CONDITIONED
C. LIFT UNDER SEPARATE PERMIT
D. ALL INTERIOR FINISHES TO COMPLY WITH FBC CHAPTER 8, SEE G-012, SECTION F FOR DETAILS.
E. ALL WOOD USED THROUGHOUT SHALL BE INHERENTLY FIRE RETARDANT
F. ALL GUEST ROOM ENTRY DOORS AND CORRIDOR DOORS TO BE 1 HOUR RATED

LEGEND

EXISTING PARTITION TO REMAIN
NEW PARTITION
NEW CMU PARTITION
N.L.C. SHADING
EXISTING STRUCTURE
GWB CEILING/SOFFIT
EXISTING DOOR TO REMAIN
DOOR NUMBER NEW DOOR
ELEVATION REFERENCE
DETAIL REFERENCE
HOSE BIB
F.S. FLOOR SINK
FD.-FLOOR DRAIN
W.-WASTE OUTLET
TD - TRENCH DRAIN
LEVEL CHANGE

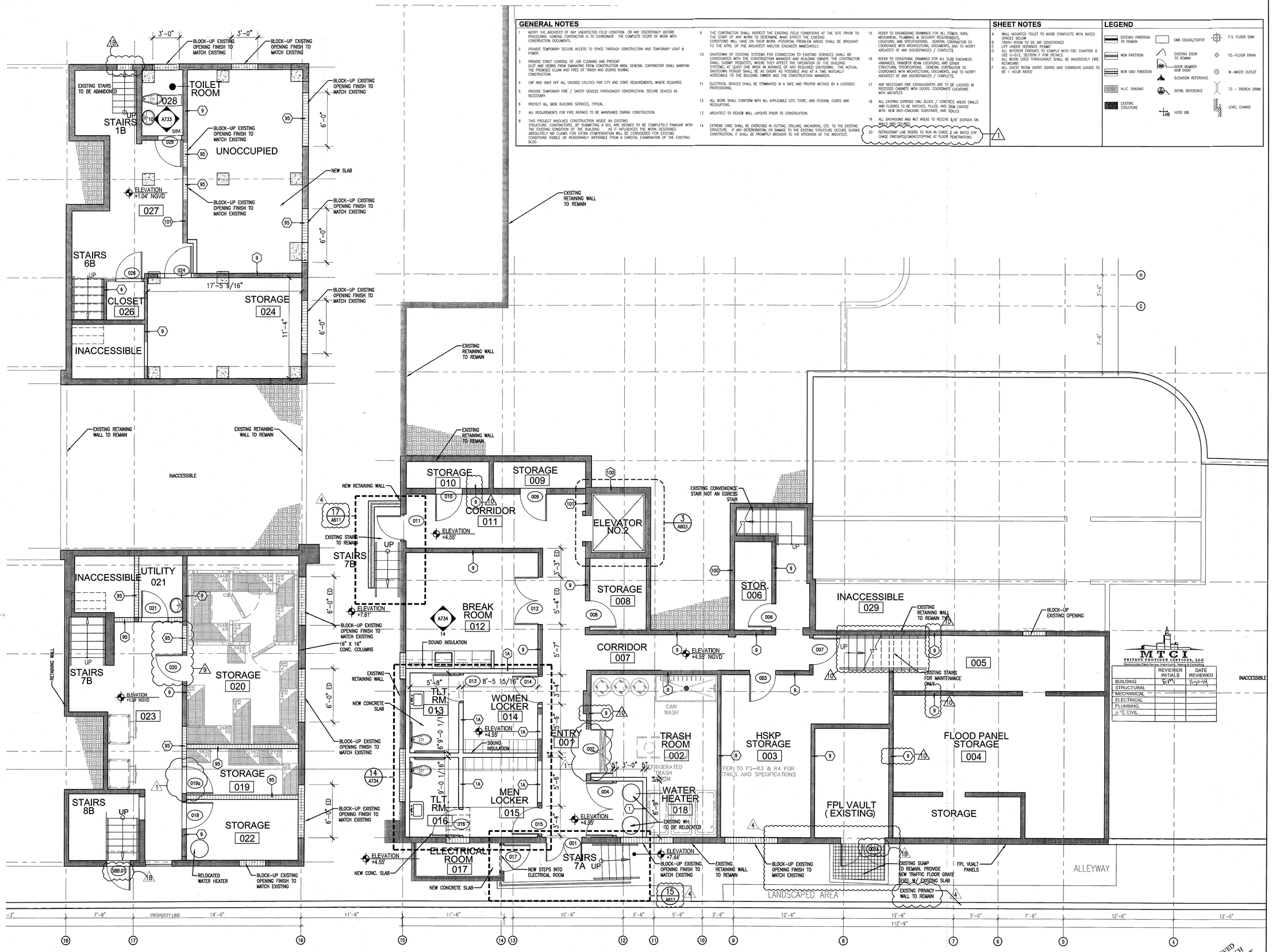

1 ENLARGED BASEMENT LEVEL PLAN / HADDON HALL
SCALE: 1/4" = 1'-0"

HADDON HALL
1500 COLLINS AVE
MIAMI BEACH, FL

KEYPLAN N.T.S.

REVISIONS

NO.	DESCRIPTION	ISSUE DATE
1	PROGRESS TO 100% CD	02-18-2014
1B	DOOR-WINDOW COORD.	03-5-2014
4	FIRE REVIEW COMMENTS	04-01-2014
9	KITCHEN REINFORCEMENT	05-30-2014
10	MASTER PERMIT COMMENTS	07-03-2014
11	P&Z COMMENTS	07-14-2014

100% CONSTRUCTION DOCUMENT SET

NORTH SEAL

Jonathan Cardello
Lic. # AR93391

ADD Inc Architecture Interiors Planning

One Biscayne Tower
Suite 1670
Two South
Biscayne Boulevard
Miami, Fl 33131
T. 305.482.8700
F. 305.482.8770
www.addinc.com
Lic. # AA26001507

Boston Miami

MITCH PRIVATE PROVIDER SERVICES, LLC
Construction Plans Review, Inspections, Testing & Consulting

	REVIEWER INITIALS	DATE REVIEWED
BUILDING	EM	11-10-14
STRUCTURAL		
MECHANICAL		
ELECTRICAL		
PLUMBING		
SITE CIVIL		

JOB NUMBER:	13036.00
CHECKED BY:	
ISSUE DATE:	FEBRUARY 18, 2014
SCALE:	1/4" = 1'-0"

SHEET TITLE

ENLARGED BASEMENT PLAN

SHEET NUMBER

A110

COPYRIGHT ADD INC 2011

APPROVED MIAMI BEACH FIRE DEPARTMENT

GENERAL NOTES

1. NOTIFY THE ARCHITECT OF ANY UNEXPECTED FIELD CONDITION OR ANY DISCREPANCY BEFORE PROCEEDING. GENERAL CONTRACTOR IS TO COORDINATE THE COMPLETE SCOPE OF WORK WITH CONSTRUCTION DOCUMENTS.
2. PROVIDE TEMPORARY SECURE ACCESS TO SPACE THROUGH CONSTRUCTION AND TEMPORARY LIGHT & POWER.
3. PROVIDE STRICT CONTROL OF JOB CLEANING AND PREVENT DUST AND DEBRIS FROM EMANATING FROM CONSTRUCTION AREA. GENERAL CONTRACTOR SHALL MAINTAIN THE PREMISES CLEAN AND FREE OF TRASH AND DEBRIS DURING CONSTRUCTION.
4. CAP AND SHUT OFF ALL UNUSED UTILITIES PER CITY AND STATE REQUIREMENTS, WHERE REQUIRED.
5. PROVIDE TEMPORARY FIRE / SAFETY DEVICES THROUGHOUT CONSTRUCTION. SECURE DEVICES AS NECESSARY.
6. PROTECT ALL BASE BUILDING SERVICES, TYPICAL.
7. ALL REQUIREMENTS FOR FIRE RATINGS TO BE MANTAINED DURING CONSTRUCTION.
8. THIS PROJECT INVOLVES CONSTRUCTION INSIDE AN EXISTING STRUCTURE. CONTRACTORS, BY SUBMITTING A BID, ARE DEEMED TO BE COMPLETELY FAMILIAR WITH THE EXISTING CONDITION OF THE BUILDING AS IT INFLUENCES THE WORK DESCRIBED. ABSOLUTELY NO CLAIMS FOR EXTRA COMPENSATION WILL BE CONSIDERED FOR EXISTING CONDITIONS VISIBLE OR REASONABLY INFERABLE FROM A CAREFUL EXAMINATION OF THE EXISTING BLDG.
9. THE CONTRACTOR SHALL INSPECT THE EXISTING FIELD CONDITIONS AT THE SITE PRIOR TO THE START OF ANY WORK TO DETERMINE WHAT EFFECT THE EXISTING CONDITIONS WILL HAVE ON THEIR WORK. POTENTIAL PROBLEM AREAS SHALL BE BROUGHT TO THE ATTN. OF THE ARCHITECT AND/OR ENGINEER IMMEDIATELY.
10. SHUTDOWN OF EXISTING SYSTEMS FOR CONNECTION TO EXISTING SERVICES SHALL BE COORDINATED WITH THE CONSTRUCTION MANAGER AND BUILDING OWNER. THE CONTRACTOR SHALL SUBMIT REQUESTS, WHERE THEY AFFECT THE OPERATION OF THE BUILDING SYSTEMS, AT LEAST ONE WEEK IN ADVANCE OF ANY REQUIRED SHUTDOWN. THE ACTUAL SHUTDOWN PERIOD SHALL BE AS SHORT AS POSSIBLE AND AT A TIME MUTUALLY AGREEABLE TO THE BUILDING OWNER AND THE CONSTRUCTION MANAGER.
11. ELECTRICAL DEVICES SHALL BE TERMINATED IN A SAFE AND PROPER METHOD BY A LICENSED PROFESSIONAL.
12. ALL WORK SHALL CONFORM WITH ALL APPLICABLE CITY, STATE, AND FEDERAL CODES AND REGULATIONS.
13. ARCHITECT TO REVIEW WALL LAYOUTS PRIOR TO CONSTRUCTION.
14. EXTREME CARE SHALL BE EXERCISED IN CUTTING, DRILLING, ANCHORING, ETC. TO THE EXISTING STRUCTURE. IF ANY DETERIORATION, OR DAMAGE TO THE EXISTING STRUCTURE OCCURS DURING CONSTRUCTION, IT SHALL BE PROMPTLY BROUGHT TO THE ATTENTION OF THE ARCHITECT.
15. REFER TO ENGINEERING DRAWINGS FOR ALL POWER, DATA, MECHANICAL, PLUMBING, & SECURITY REQUIREMENTS, LOCATIONS, AND SPECIFICATIONS. GENERAL CONTRACTOR TO COORDINATE WITH ARCHITECTURAL DOCUMENTS, AND TO NOTIFY ARCHITECT OF ANY DISCREPANCIES / CONFLICTS.
16. REFER TO STRUCTURAL DRAWINGS FOR ALL SLAB THICKNESS VARIANCES, TRANSFER BEAM LOCATIONS, AND OTHER STRUCTURAL SPECIFICATIONS. GENERAL CONTRACTOR TO COORDINATE WITH ARCHITECTURAL DOCUMENTS, AND TO NOTIFY ARCHITECT OF ANY DISCREPANCIES / CONFLICTS.
17. ANY NECESSARY FIRE EXTINGUISHERS ARE TO BE LOCATED IN RECESSED CABINETS WITH DOORS. COORDINATE LOCATIONS WITH ARCHITECT.
18. ALL EXISTING EXPOSED CMU BLOCK / CONCRETE AREAS (WALLS AND FLOORS) TO BE PATCHED, FILLED, AND SKIM COATED WITH NEW ANTI-CRACKING SUBSTRATE, AND SEALED.
19. ALL BATHROOMS AND WET AREAS TO RECEIVE 5/8" DUROCK ON WALLS AND CEILINGS.
20. REFRIGERANT LINE RISERS TO RUN IN CHASE; 2 HR RATED GYP CHASE FIRESAFED/SMOKESTOPPING AT FLOOR PENETRATIONS. 1

SHEET NOTES

A WALL MOUNTED TOILET TO AVOID CONFLICTS WITH RATED SPACES BELOW
B TRASH ROOM TO BE AIR CONDITIONED
C LIFT UNDER SEPARATE PERMIT
D ALL INTERIOR FINISHES TO COMPLY WITH FBC CHAPTER 8. SEE G-012, SECTION F FOR DETAILS.
E ALL WOOD USED THROUGHOUT SHALL BE INHERENTLY FIRE RETARDANT
F ALL GUEST ROOM ENTRY DOORS AND CORRIDOR DOORS TO BE 1 HOUR RATED

LEGEND

EXISTING PARTITION TO REMAIN
NEW PARTITION
NEW CMU PARTITION
N.I.C. SHADING
EXISTING STRUCTURE
GWB CEILING/SOFFIT
EXISTING DOOR TO REMAIN
DOOR NUMBER
NEW DOOR
ELEVATION REFERENCE
DETAIL REFERENCE
HOSE BIB
F.S. FLOOR SINK
FD.-FLOOR DRAIN
W.-WASTE OUTLET
TD - TRENCH DRAIN
LEVEL CHANGE

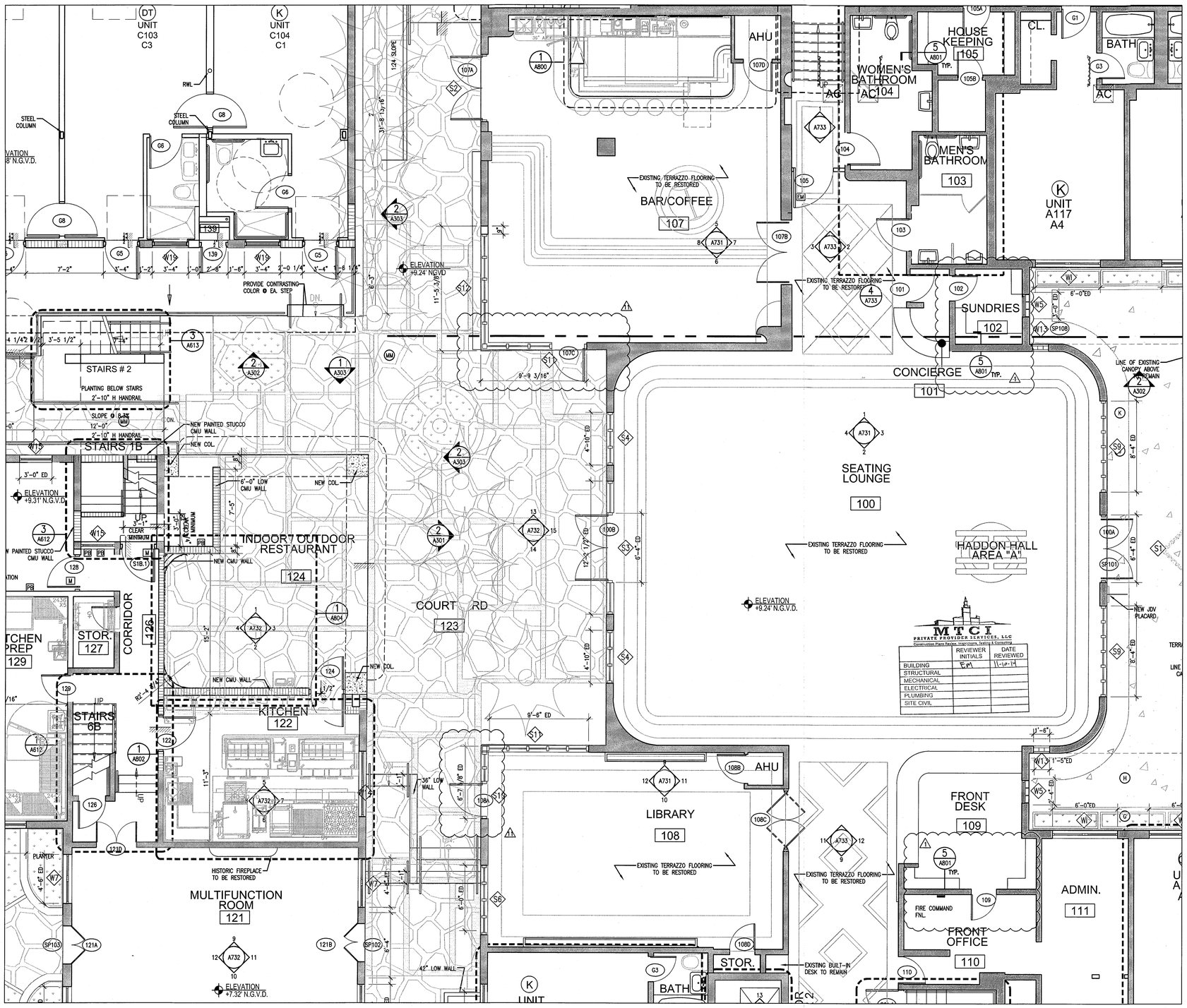

1 ENLARGED FIRST FLOOR PLAN – NORTH HADDON HALL
SCALE: 1/4" = 1'-0"

APPROVED MIAMI BEACH FIRE DEPARTMENT

HADDON HALL
1500 COLLINS AVE
MIAMI BEACH, FL

KEYPLAN N.T.S.

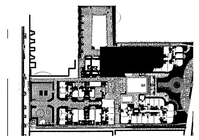

REVISIONS

NO.	DESCRIPTION	ISSUE DATE
1	PROGRESS TO 100% CD	02-13-2014
1	P+Z COMMENTS	07-14-2014

100% CONSTRUCTION DOCUMENT SET

NORTH SEAL

Jonathan Cardello
Lic.#AR93391

ADD Inc Architecture Interiors Planning

One Biscayne Tower
Suite 1670
Two South
Biscayne Boulevard
Miami, Fl 33131
T. 305.482.8700
F. 305.482.8770
www.addinc.com
Lic. # AA26001507

Boston Miami

JOB NUMBER:	13036.00
CHECKED BY:	
ISSUE DATE:	FEBRUARY 18, 2014
SCALE:	1/4" = 1'-0"

SHEET TITLE

ENLARGED PUBLIC AREAS

SHEET NUMBER

A111

COPYRIGHT ADD INC 2011

GENERAL NOTES

1. NOTIFY THE ARCHITECT OF ANY UNEXPECTED FIELD CONDITION OR ANY DISCREPANCY BEFORE PROCEEDING. GENERAL CONTRACTOR IS TO COORDINATE THE COMPLETE SCOPE OF WORK WITH CONSTRUCTION DOCUMENTS.
2. PROVIDE TEMPORARY SECURE ACCESS TO SPACE THROUGH CONSTRUCTION AND TEMPORARY LIGHT & POWER.
3. PROVIDE STRICT CONTROL OF JOB CLEANING AND PREVENT DUST AND DEBRIS FROM EMANATING FROM CONSTRUCTION AREA. GENERAL CONTRACTOR SHALL MAINTAIN THE PREMISES CLEAN AND FREE OF TRASH AND DEBRIS DURING CONSTRUCTION.
4. CAP AND SHUT OFF ALL UNUSED UTILITIES PER CITY AND STATE REQUIREMENTS, WHERE REQUIRED.
5. PROVIDE TEMPORARY FIRE / SAFETY DEVICES THROUGHOUT CONSTRUCTION. SECURE DEVICES AS NECESSARY.
6. PROTECT ALL BASE BUILDING SERVICES, TYPICAL.
7. ALL REQUIREMENTS FOR FIRE RATINGS TO BE MAINTAINED DURING CONSTRUCTION.
8. THIS PROJECT INVOLVES CONSTRUCTION INSIDE AN EXISTING STRUCTURE. CONTRACTORS, BY SUBMITTING A BID, ARE DEEMED TO BE COMPLETELY FAMILIAR WITH THE EXISTING CONDITION OF THE BUILDING AS IT INFLUENCES THE WORK DESCRIBED. ABSOLUTELY NO CLAIMS FOR EXTRA COMPENSATION WILL BE CONSIDERED FOR EXISTING CONDITIONS VISIBLE OR REASONABLY INFERABLE FROM A CAREFUL EXAMINATION OF THE EXISTING BLDG.
9. THE CONTRACTOR SHALL INSPECT THE EXISTING FIELD CONDITIONS AT THE SITE PRIOR TO THE START OF ANY WORK TO DETERMINE WHAT EFFECT THE EXISTING CONDITIONS WILL HAVE ON THEIR WORK. POTENTIAL PROBLEM AREAS SHALL BE BROUGHT TO THE ATTN. OF THE ARCHITECT AND/OR ENGINEER IMMEDIATELY.
10. SHUTDOWN OF EXISTING SYSTEMS FOR CONNECTION TO EXISTING SERVICES SHALL BE COORDINATED WITH THE CONSTRUCTION MANAGER AND BUILDING OWNER. THE CONTRACTOR SHALL SUBMIT REQUESTS, WHERE THEY AFFECT THE OPERATION OF THE BUILDING SYSTEMS, AT LEAST ONE WEEK IN ADVANCE OF ANY REQUIRED SHUTDOWN. THE ACTUAL SHUTDOWN PERIOD SHALL BE AS SHORT AS POSSIBLE AND AT A TIME MUTUALLY AGREEABLE TO THE BUILDING OWNER AND THE CONSTRUCTION MANAGER.
11. ELECTRICAL DEVICES SHALL BE TERMINATED IN A SAFE AND PROPER METHOD BY A LICENSED PROFESSIONAL.
12. ALL WORK SHALL CONFORM WITH ALL APPLICABLE CITY, STATE, AND FEDERAL CODES AND REGULATIONS.
13. ARCHITECT TO REVIEW WALL LAYOUTS PRIOR TO CONSTRUCTION.
14. EXTREME CARE SHALL BE EXERCISED IN CUTTING, DRILLING, ANCHORING, ETC. TO THE EXISTING STRUCTURE. IF ANY DETERIORATION, OR DAMAGE TO THE EXISTING STRUCTURE OCCURS DURING CONSTRUCTION, IT SHALL BE PROMPTLY BROUGHT TO THE ATTENTION OF THE ARCHITECT.
15. REFER TO ENGINEERING DRAWINGS FOR ALL POWER, DATA, MECHANICAL, PLUMBING, & SECURITY REQUIREMENTS, LOCATIONS, AND SPECIFICATIONS. GENERAL CONTRACTOR TO COORDINATE WITH ARCHITECTURAL DOCUMENTS, AND TO NOTIFY ARCHITECT OF ANY DISCREPANCIES / CONFLICTS.
16. REFER TO STRUCTURAL DRAWINGS FOR ALL SLAB THICKNESS VARIANCES, TRANSFER BEAM LOCATIONS, AND OTHER STRUCTURAL SPECIFICATIONS. GENERAL CONTRACTOR TO COORDINATE WITH ARCHITECTURAL DOCUMENTS, AND TO NOTIFY ARCHITECT OF ANY DISCREPANCIES / CONFLICTS.
17. ANY NECESSARY FIRE EXTINGUISHERS ARE TO BE LOCATED IN RECESSED CABINETS WITH DOORS. COORDINATE LOCATIONS WITH ARCHITECT.
18. ALL EXISTING EXPOSED CMU BLOCK / CONCRETE AREAS (WALLS AND FLOORS) TO BE: PATCHED, FILLED, AND SKIM COATED WITH NEW ANTI-CRACKING SUBSTRATE, AND SEALED.
19. ALL BATHROOMS AND WET AREAS TO RECEIVE 5/8" DUROCK ON WALLS AND CEILINGS.
20. REFRIGERANT LINE RISERS TO RUN IN CHASE 2 HR RATED (VP CHASE FIRESAFED/SMOKESTOPPING AT FLOOR PENETRATIONS.

SHEET NOTES

A. WALL MOUNTED TOILET TO AVOID CONFLICTS WITH RATED SPACES BELOW.
B. TRASH ROOM TO BE AIR CONDITIONED
C. LIFT UNDER SEPARATE PERMIT
D. ALL INTERIOR FINISHES TO COMPLY WITH FBC CHAPTER 8, SEE G-012, SECTION 7 FOR DETAILS.
E. ALL WOOD USED THROUGHOUT SHALL BE INHERENTLY FIRE RETARDANT
F. ALL GUEST ROOM ENTRY DOORS AND CORRIDOR DOORS TO BE 1 HOUR RATED

LEGEND

- EXISTING PARTITION TO REMAIN
- NEW PARTITION
- NEW CMU PARTITION
- N.I.C. SHADING
- EXISTING STRUCTURE
- CWB CEILING/SOFFIT
- EXISTING DOOR TO REMAIN
- DOOR NUMBER NEW DOOR
- ELEVATION REFERENCE
- DETAIL REFERENCE
- HOSE BIB
- F.S. FLOOR SINK
- FD.-FLOOR DRAIN
- W.-WASTE OUTLET
- TD - TRENCH DRAIN
- LEVEL CHANGE

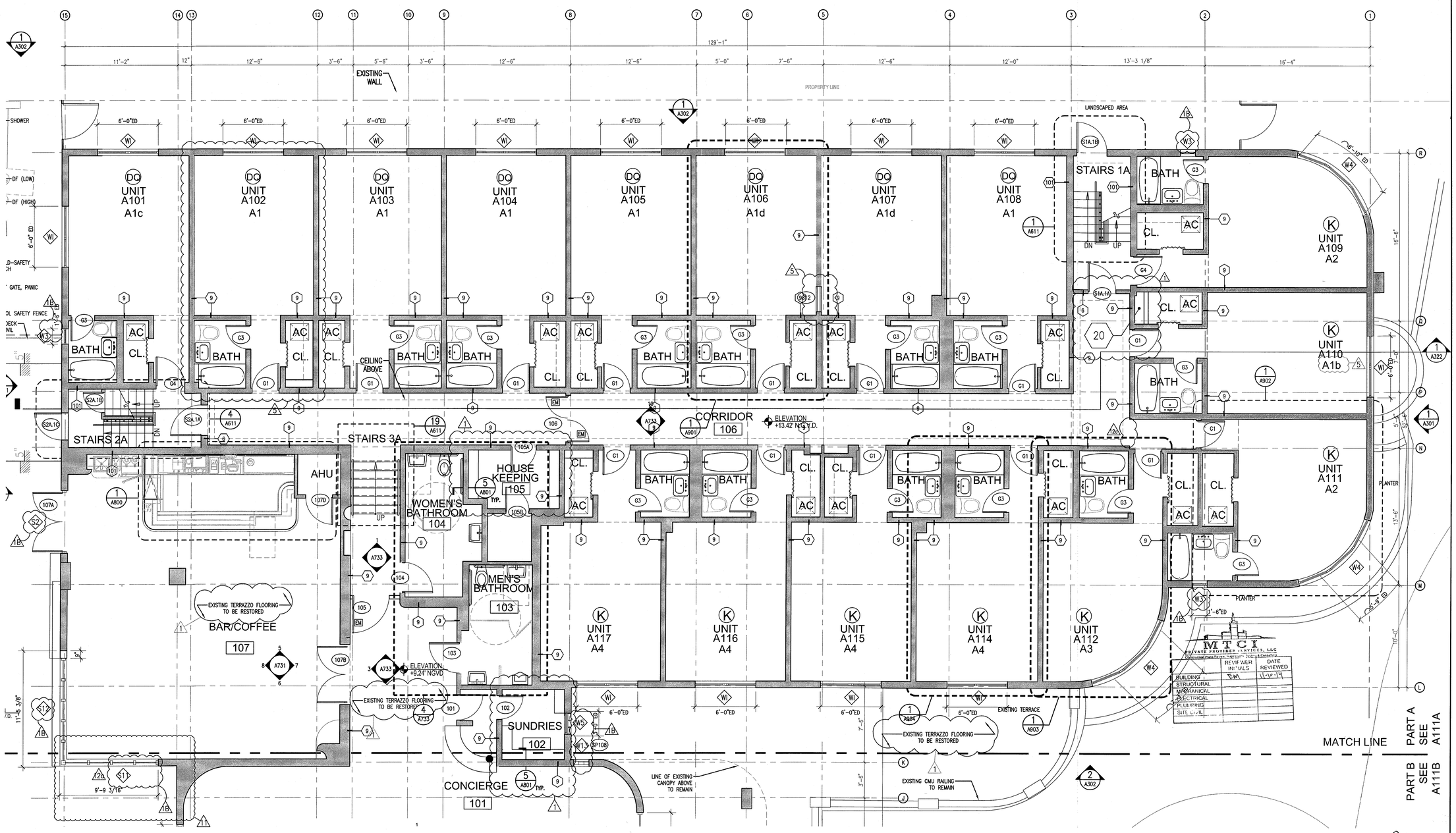

1 ENLARGED FIRST FLOOR PLAN – NORTH HADDON HALL
SCALE: 1/4" = 1'-0"

HADDON HALL
1500 COLLINS AVE.
MIAMI BEACH, FL

KEYPLAN N.T.S.

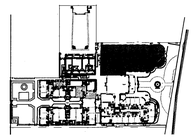

REVISIONS		
NO.	DESCRIPTION	ISSUE DATE
1	PROGRESS TO 100% CD	02-18-2014
1B	DOOR-WINDOW COORD.	03-05-2014
5	GUESTROOM COORDINATION	03-14-2014
1A	P&Z COMMENTS	07-14-2014
2A	FIRE PERMIT COMMENTS	09-29-2014

100% CONSTRUCTION DOCUMENT SET

NORTH SEAL

10-9-14
Jonathan Cardello
Lic. # AR93391

ADD Inc Architecture Interiors Planning

One Biscayne Tower
Suite 1670
Two South
Biscayne Boulevard
Miami, Fl 33131
T. 305.482.8700
F. 305.482.8770
www.addinc.com
Lic. # AA26001507

Boston Miami

JOB NUMBER:	13036.00
CHECKED BY:	
ISSUE DATE:	FEBRUARY 18, 2014
SCALE:	1/4" = 1'-0"

SHEET TITLE

ENLARGED FIRST FLOOR PLAN - NORTH AREA 'A'

SHEET NUMBER

A111a1

COPYRIGHT ADD INC 2011

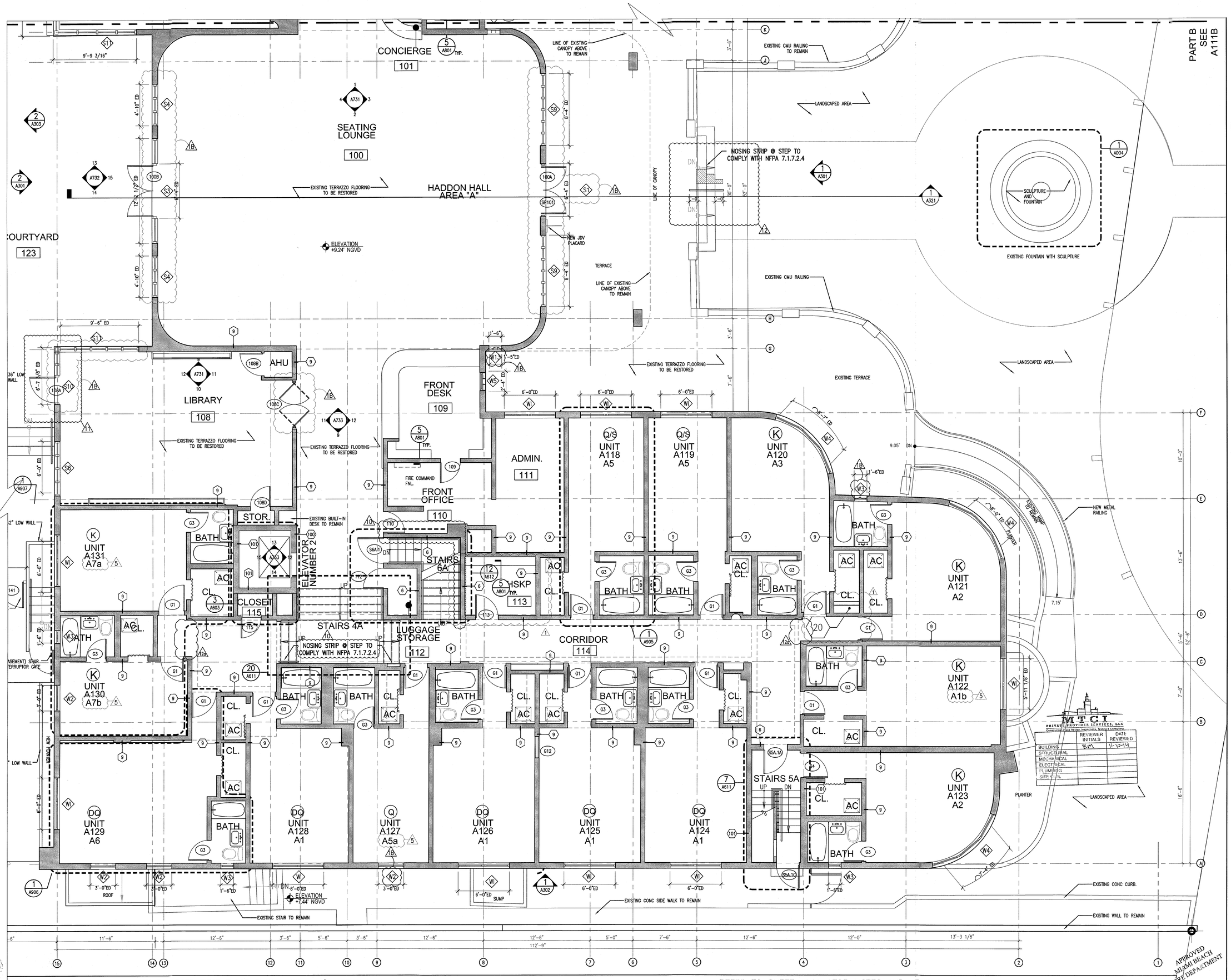

1 ENLARGED FIRST FLOOR PLAN – SOUTH / HADDON HALL
SCALE: 1/4" = 1'-0"

REFER TO SHEET A111a1FOR NOTES AND LEGEND

HADDON HALL
1500 COLLINS AVE.
MIAMI BEACH, FL

KEYPLAN N.T.S.

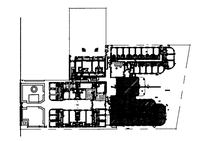

REVISIONS

NO.	DESCRIPTION	ISSUE DATE
1	PROGRESS TO 100% CD	XX-XX-2014
1B	DOOR-WINDOW COORD.	03-5-2014
5	GUESTROOM COORDINATION	04-17-2014
10	MASTER PERMIT COMMENTS	07-03-2014
11	P&Z COMMENTS	07-14-2014
12	FIRE & MTCI PERMIT COMMENTS	08-21-2014
12a	FIRE PERMIT COMMENTS	09-29-2014

100% CONSTRUCTION DOCUMENT SET

NORTH SEAL

10·9·14
Jonathan Cardello
Lic. # AR93391

ADD Inc Architecture Interiors Planning

One Biscayne Tower
Suite 1670
Two South
Biscayne Boulevard
Miami, Fl 33131
T. 305.482.8700
F. 305.482.8770
www.addinc.com
Lic. # AA26001507

Boston Miami

MTCI PRIVATE PROVIDER SERVICES, LLC
Connecting Plan Review, Inspections, Testing & Consulting

BUILDING	REVIEWER INITIALS	DATE REVIEWED
STRUCTURAL	SPA	11-10-14
MECHANICAL		
ELECTRICAL		
PLUMBING		
SITE PLAN		

JOB NUMBER:	13036.00
CHECKED BY:	
ISSUE DATE:	FEBRUARY 18, 2014
SCALE:	1/4" = 1'-0"

SHEET TITLE

ENLARGED FIRST FLOOR PLAN - SOUTH AREA 'A'

SHEET NUMBER

A111a2

COPYRIGHT ADD INC 2011

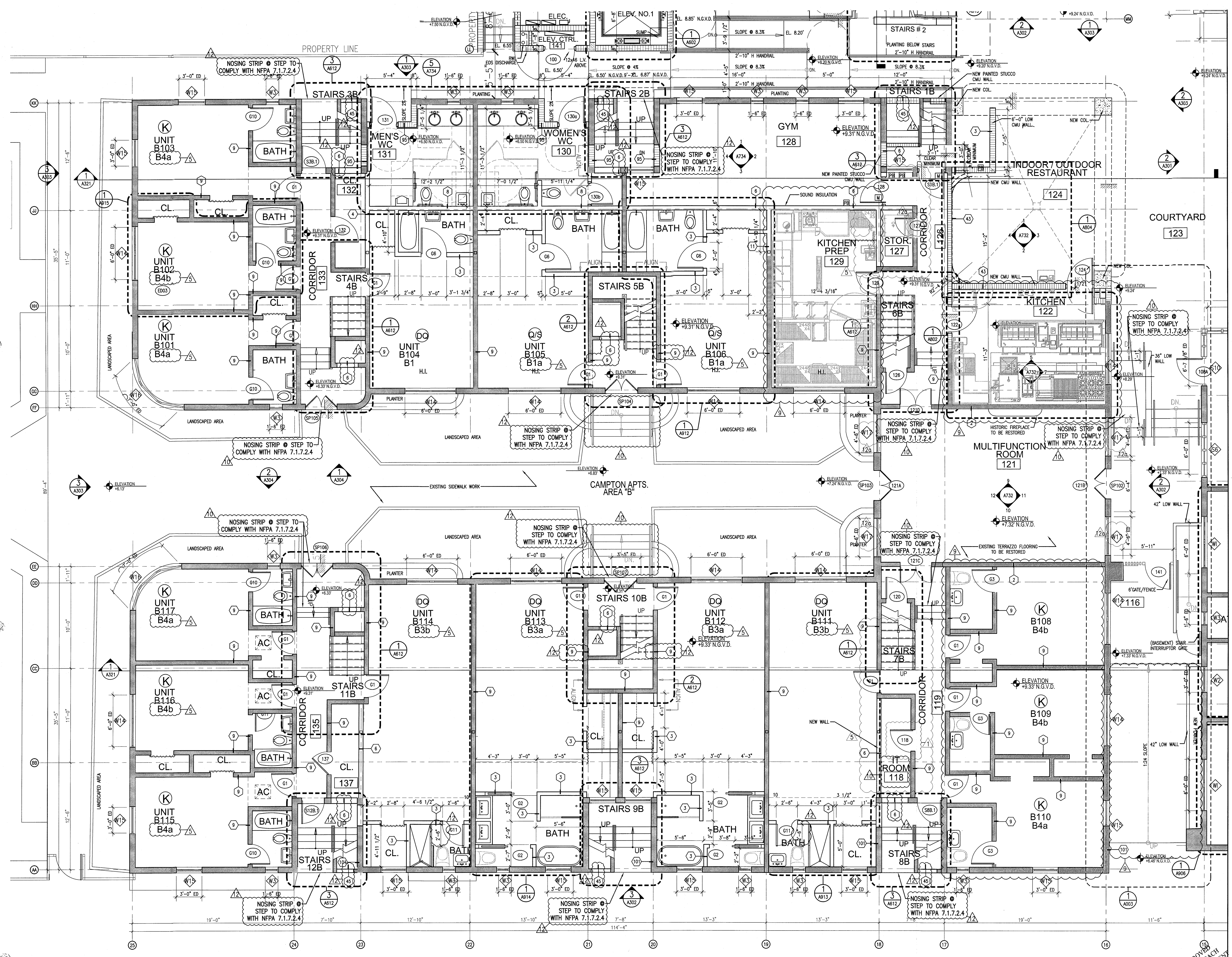

1 ENLARGED AREA C FIRST FLOOR PLAN CAMPTON
SCALE: 1/4" = 1'-0"

REFER TO SHEET A111a1FOR NOTES AND LEGEND

HADDON HALL
1500 COLLINS AVE
MIAMI BEACH, FL

KEYPLAN N.T.S.

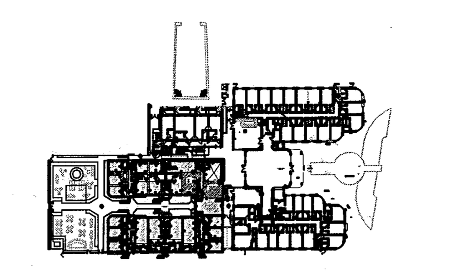

REVISIONS

NO.	DESCRIPTION	ISSUE DATE
1	PROGRESS TO 100% CD	02-18-2014
1B	DOOR-WINDOW COORD.	03-05-2014
5	GUESTROOM COORDINATION	04-17-2014
9	KITCHEN REINFORCEMENT	05-30-2014
10	MASTER PERMIT COMMENTS	07-03-2014
12	FIRE & MTCI PERMIT COMMENTS	08-21-2014
12a	FIRE & MTCI PERMIT COMMENTS	09-29-2014

MTCI PRIVATE PROVIDER SERVICES, LLC
Construction Plans Review, Inspections, Testing & Consulting

	REVIEWER INITIALS	DATE REVIEWED
BUILDING	EM	11-10-14
STRUCTURAL		
MECHANICAL		
ELECTRICAL		
PLUMBING		
SITE CIVIL		

100% CONSTRUCTION DOCUMENT SET

NORTH SEAL

10.9.14
Jonathan Cardello
Lic. # AR93391

ADD Inc Architecture Interiors Planning

One Biscayne Tower
Suite 1670
Two South
Biscayne Boulevard
Miami, Fl 33131
T. 305.482.8700
F. 305.482.8770
www.addinc.com
Lic. # AA26001507

Boston Miami

JOB NUMBER: 13036.00
CHECKED BY:
ISSUE DATE: FEBRUARY 18, 2014
SCALE: 1/4" = 1'-0"

SHEET TITLE
ENLARGED FIRST FLOOR PLAN AREA 'B'

SHEET NUMBER
A111b

COPYRIGHT ADD INC 2011

GENERAL NOTES

1. NOTIFY THE ARCHITECT OF ANY UNEXPECTED FIELD CONDITION OR ANY DISCREPANCY BEFORE PROCEEDING. GENERAL CONTRACTOR IS TO COORDINATE THE COMPLETE SCOPE OF WORK WITH CONSTRUCTION DOCUMENTS.
2. PROVIDE TEMPORARY SECURE ACCESS TO SPACE THROUGH CONSTRUCTION AND TEMPORARY LIGHT & POWER.
3. PROVIDE STRICT CONTROL OF JOB CLEANING AND PREVENT DUST AND DEBRIS FROM EMANATING FROM CONSTRUCTION AREA. GENERAL CONTRACTOR SHALL MAINTAIN THE PREMISES CLEAN AND FREE OF TRASH AND DEBRIS DURING CONSTRUCTION.
4. CAP AND SHUT OFF ALL UNUSED UTILITIES PER CITY AND STATE REQUIREMENTS, WHERE REQUIRED.
5. PROVIDE TEMPORARY FIRE / SAFETY DEVICES THROUGHOUT CONSTRUCTION. SECURE DEVICES AS NECESSARY.
6. PROTECT ALL BASE BUILDING SERVICES, TYPICAL.
7. ALL REQUIREMENTS FOR FIRE RATINGS TO BE MAINTAINED DURING CONSTRUCTION.
8. THIS PROJECT INVOLVES CONSTRUCTION INSIDE AN EXISTING STRUCTURE. CONTRACTORS, BY SUBMITTING A BID, ARE DEEMED TO BE COMPLETELY FAMILIAR WITH THE EXISTING CONDITION OF THE BUILDING AS IT INFLUENCES THE WORK DESCRIBED. ABSOLUTELY NO CLAIMS FOR EXTRA COMPENSATION WILL BE CONSIDERED FOR EXISTING CONDITIONS VISIBLE OR REASONABLY INFERABLE FROM A CAREFUL EXAMINATION OF THE EXISTING BLDG.
9. THE CONTRACTOR SHALL INSPECT THE EXISTING FIELD CONDITIONS AT THE SITE PRIOR TO THE START OF ANY WORK TO DETERMINE WHAT EFFECT THE EXISTING CONDITIONS WILL HAVE ON THEIR WORK. POTENTIAL PROBLEM AREAS SHALL BE BROUGHT TO THE ATTN. OF THE ARCHITECT AND/OR ENGINEER IMMEDIATELY.
10. SHUTDOWN OF EXISTING SYSTEMS FOR CONNECTION TO EXISTING SERVICES SHALL BE COORDINATED WITH THE CONSTRUCTION MANAGER AND BUILDING OWNER. THE CONTRACTOR SHALL SUBMIT REQUESTS, WHERE THEY AFFECT THE OPERATION OF THE BUILDING SYSTEMS, AT LEAST ONE WEEK IN ADVANCE OF ANY REQUIRED SHUTDOWN. THE ACTUAL SHUTDOWN PERIOD SHALL BE AS SHORT AS POSSIBLE AND AT A TIME MUTUALLY AGREEABLE TO THE BUILDING OWNER AND THE CONSTRUCTION MANAGER.
11. ELECTRICAL DEVICES SHALL BE TERMINATED IN A SAFE AND PROPER METHOD BY A LICENSED PROFESSIONAL.
12. ALL WORK SHALL CONFORM WITH ALL APPLICABLE CITY, STATE, AND FEDERAL CODES AND REGULATIONS.
13. ARCHITECT TO REVIEW WALL LAYOUTS PRIOR TO CONSTRUCTION.
14. EXTREME CARE SHALL BE EXERCISED IN CUTTING, DRILLING, ANCHORING, ETC. TO THE EXISTING STRUCTURE. IF ANY DETERIORATION, OR DAMAGE TO THE EXISTING STRUCTURE OCCURS DURING CONSTRUCTION, IT SHALL BE PROMPTLY BROUGHT TO THE ATTENTION OF THE ARCHITECT.
15. REFER TO ENGINEERING DRAWINGS FOR ALL POWER, DATA, MECHANICAL, PLUMBING, & SECURITY REQUIREMENTS, LOCATIONS, AND SPECIFICATIONS. GENERAL CONTRACTOR TO COORDINATE WITH ARCHITECTURAL DOCUMENTS, AND TO NOTIFY ARCHITECT OF ANY DISCREPANCIES / CONFLICTS.
16. REFER TO STRUCTURAL DRAWINGS FOR ALL SLAB THICKNESS VARIANCES, TRANSFER BEAM LOCATIONS, AND OTHER STRUCTURAL SPECIFICATIONS. GENERAL CONTRACTOR TO COORDINATE WITH ARCHITECTURAL DOCUMENTS, AND TO NOTIFY ARCHITECT OF ANY DISCREPANCIES / CONFLICTS.
17. ANY NECESSARY FIRE EXTINGUISHERS ARE TO BE LOCATED IN RECESSED CABINETS WITH DOORS. COORDINATE LOCATIONS WITH ARCHITECT.
18. ALL EXISTING EXPOSED CMU BLOCK / CONCRETE AREAS (WALLS AND FLOORS) TO BE PATCHED, FILLED, AND SKIM COATED WITH NEW ANTI-CRACKING SUBSTRATE, AND SEALED.
19. ALL BATHROOMS AND WET AREAS TO RECEIVE 5/8" DUROCK ON WALLS AND CEILINGS.
20. REFRIGERANT LINE RISERS TO RUN IN CLASS 2 HR RATED CPT CHASE FIRESAFTO/SMOKESTOPPING AT FLOOR PENETRATIONS. 1

SHEET NOTES

A WALL MOUNTED TOILET TO AVOID CONFLICTS WITH RATED SPACES BELOW
B TRASH ROOM TO BE AIR CONDITIONED
C LIFT UNDER SEPARATE PERMIT
D ALL INTERIOR FINISHES TO COMPLY WITH FBC CHAPTER 8. SEE G-012, SECTION F FOR DETAILS.
E ALL WOOD USED THROUGHOUT SHALL BE INHERENTLY FIRE RETARDANT
F ALL GUEST ROOM ENTRY DOORS AND CORRIDOR DOORS TO BE 1 HOUR RATED

LEGEND

EXISTING PARTITION TO REMAIN
NEW PARTITION
NEW CMU PARTITION
N.I.C. SHADING
EXISTING STRUCTURE
GWB CEILING/SOFFIT
EXISTING DOOR TO REMAIN
DOOR NUMBER NEW DOOR
ELEVATION REFERENCE
DETAIL REFERENCE
HOSE BIB
F.S. FLOOR SINK
FD.-FLOOR DRAIN
W.-WASTE OUTLET
TD – TRENCH DRAIN
LEVEL CHANGE

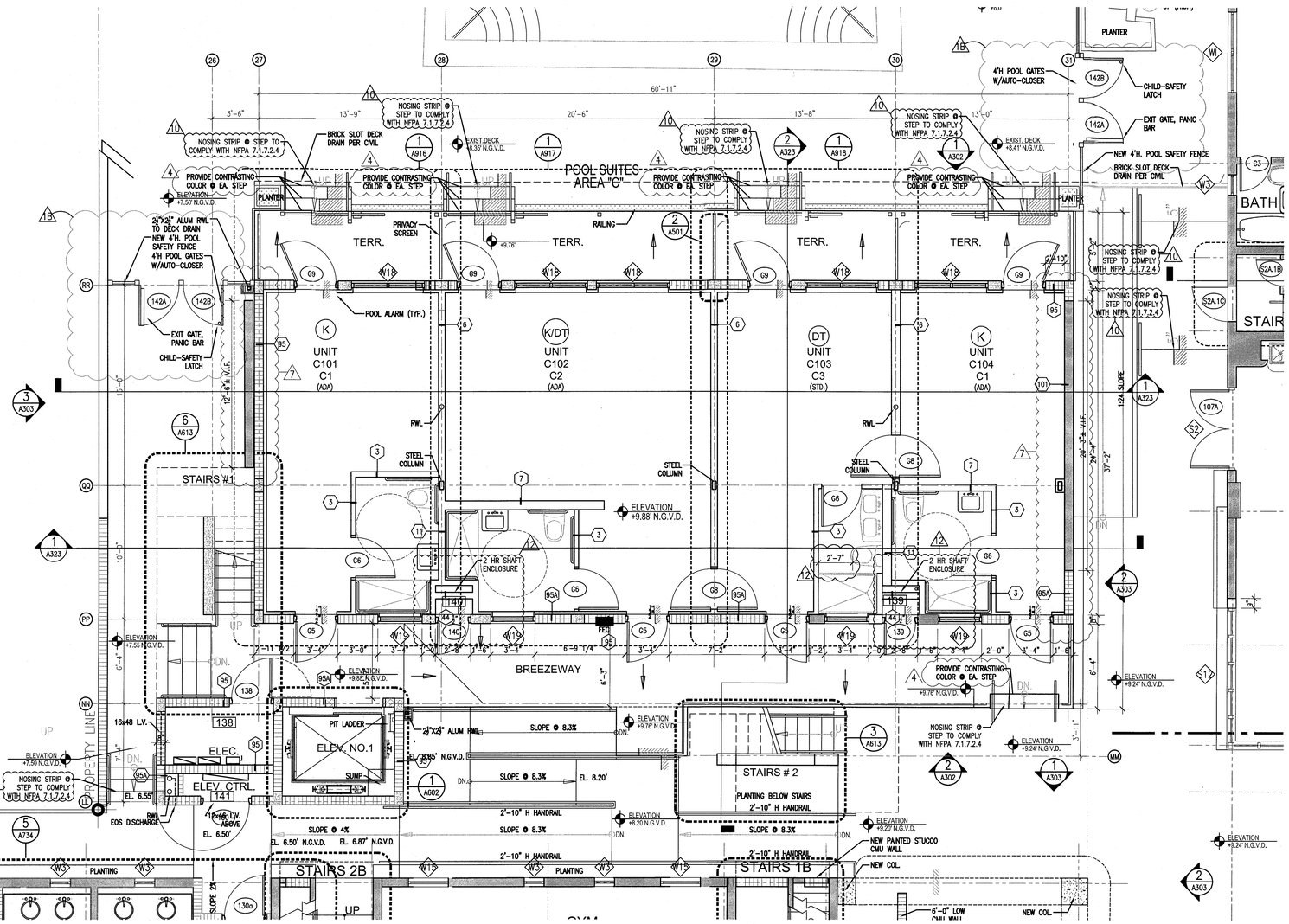

1 ENLARGED FIRST FLOOR PLAN – AREA 'C'
SCALE: 1/4" = 1'-0"

HADDON HALL
1500 COLLINS AVE
MIAMI BEACH, FL

KEYPLAN N.T.S.

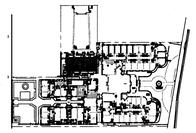

REVISIONS		
NO.	DESCRIPTION	ISSUE DATE
1B	DOOR-WINDOW COORD.	03-5-2014
4	FIRE REVIEW COMMENTS	04-01-2014
7	POOL SUITES WALLS	04-14-2014
10	MASTER PERMIT COMMENTS	07-03-2014
12	FIRE & MTCI PERMIT COMMENTS	08-21-2014

100% CONSTRUCTION DOCUMENT SET

NORTH SEAL

Jonathan Cardello
Lic. # AR93391

ADD Inc Architecture Interiors Planning

One Biscayne Tower
Suite 1670
Two South
Biscayne Boulevard
Miami, Fl 33131
T. 305.482.8700
F. 305.482.8770
www.addinc.com
Lic. # AA26001507

Boston Miami

MTCI
PRIVATE PROVIDER SERVICES, LLC
Construction Plans Review, Inspections, Testing & Consulting

	REVIEWER INITIALS	DATE REVIEWED
BUILDING	EM	11-10-14
STRUCTURAL		
MECHANICAL		
ELECTRICAL		
PLUMBING		
521 CIVIL		

JOB NUMBER:	13036.00
CHECKED BY:	
ISSUE DATE:	FEBRUARY 18, 2014
SCALE:	1/4" = 1'-0"

SHEET TITLE

ENLARGED FIRST FLOOR PLAN AREA 'C'

SHEET NUMBER

A111c

APPROVED MIAMI BEACH FIRE DEPARTMENT

COPYRIGHT ADD INC 2011

GENERAL NOTES

1. NOTIFY THE ARCHITECT OF ANY UNEXPECTED FIELD CONDITION OR ANY DISCREPANCY BEFORE PROCEEDING. GENERAL CONTRACTOR IS TO COORDINATE THE COMPLETE SCOPE OF WORK WITH CONSTRUCTION DOCUMENTS.
2. PROVIDE TEMPORARY SECURE ACCESS TO SPACE THROUGH CONSTRUCTION AND TEMPORARY LIGHT & POWER.
3. PROVIDE STRICT CONTROL OF JOB CLEANING AND PREVENT DUST AND DEBRIS FROM EMANATING FROM CONSTRUCTION AREA. GENERAL CONTRACTOR SHALL MAINTAIN THE PREMISES CLEAN AND FREE OF TRASH AND DEBRIS DURING CONSTRUCTION.
4. CAP AND SHUT OFF ALL UNUSED UTILITIES PER CITY AND STATE REQUIREMENTS, WHERE REQUIRED.
5. PROVIDE TEMPORARY FIRE / SAFETY DEVICES THROUGHOUT CONSTRUCTION. SECURE DEVICES AS NECESSARY.
6. PROTECT ALL BASE BUILDING SERVICES, TYPICAL.
7. ALL REQUIREMENTS FOR FIRE RATINGS TO BE MAINTAINED DURING CONSTRUCTION.
8. THIS PROJECT INVOLVES CONSTRUCTION INSIDE AN EXISTING STRUCTURE. CONTRACTORS, BY SUBMITTING A BID, ARE DEEMED TO BE COMPLETELY FAMILIAR WITH THE EXISTING CONDITION OF THE BUILDING AS IT INFLUENCES THE WORK DESCRIBED. ABSOLUTELY NO CLAIMS FOR EXTRA COMPENSATION WILL BE CONSIDERED FOR EXISTING CONDITIONS VISIBLE OR REASONABLY INFERABLE FROM A CAREFUL EXAMINATION OF THE EXISTING BLDG.
9. THE CONTRACTOR SHALL INSPECT THE EXISTING FIELD CONDITIONS AT THE SITE PRIOR TO THE START OF ANY WORK TO DETERMINE WHAT EFFECT THE EXISTING CONDITIONS WILL HAVE ON THEIR WORK. POTENTIAL PROBLEM AREAS SHALL BE BROUGHT TO THE ATTN. OF THE ARCHITECT AND/OR ENGINEER IMMEDIATELY.
10. SHUTDOWN OF EXISTING SYSTEMS FOR CONNECTION TO EXISTING SERVICES SHALL BE COORDINATED WITH THE CONSTRUCTION MANAGER AND BUILDING OWNER. THE CONTRACTOR SHALL SUBMIT REQUESTS, WHERE THEY AFFECT THE OPERATION OF THE BUILDING SYSTEMS, AT LEAST ONE WEEK IN ADVANCE OF ANY REQUIRED SHUTDOWN. THE ACTUAL SHUTDOWN PERIOD SHALL BE AS SHORT AS POSSIBLE AND AT A TIME MUTUALLY AGREEABLE TO THE BUILDING OWNER AND THE CONSTRUCTION MANAGER.
11. ELECTRICAL DEVICES SHALL BE TERMINATED IN A SAFE AND PROPER METHOD BY A LICENSED PROFESSIONAL.
12. ALL WORK SHALL CONFORM WITH ALL APPLICABLE CITY, STATE, AND FEDERAL CODES AND REGULATIONS.
13. ARCHITECT TO REVIEW WALL LAYOUTS PRIOR TO CONSTRUCTION.
14. EXTREME CARE SHALL BE EXERCISED IN CUTTING, DRILLING, ANCHORING, ETC. TO THE EXISTING STRUCTURE. IF ANY DETERIORATION, OR DAMAGE TO THE EXISTING STRUCTURE OCCURS DURING CONSTRUCTION, IT SHALL BE PROMPTLY BROUGHT TO THE ATTENTION OF THE ARCHITECT.
15. REFER TO ENGINEERING DRAWINGS FOR ALL POWER, DATA, MECHANICAL, PLUMBING, & SECURITY REQUIREMENTS, LOCATIONS, AND SPECIFICATIONS. GENERAL CONTRACTOR TO COORDINATE WITH ARCHITECTURAL DOCUMENTS, AND TO NOTIFY ARCHITECT OF ANY DISCREPANCIES / CONFLICTS.
16. REFER TO STRUCTURAL DRAWINGS FOR ALL SLAB THICKNESS VARIANCES, TRANSFER BEAM LOCATIONS, AND OTHER STRUCTURAL SPECIFICATIONS. GENERAL CONTRACTOR TO COORDINATE WITH ARCHITECTURAL DOCUMENTS, AND TO NOTIFY ARCHITECT OF ANY DISCREPANCIES / CONFLICTS.
17. ANY NECESSARY FIRE EXTINGUISHERS ARE TO BE LOCATED IN RECESSED CABINETS WITH DOORS. COORDINATE LOCATIONS WITH ARCHITECT.
18. ALL EXISTING EXPOSED CMU BLOCK / CONCRETE AREAS (WALLS AND FLOORS) TO BE PATCHED, FILLED, AND SKIM COATED WITH NEW ANTI-CRACKING SUBSTRATE, AND SEALED.
19. ALL BATHROOMS AND WET AREAS TO RECEIVE 5/8" DUROCK ON WALLS AND CEILINGS.
20. REFRIGERANT LINE RISERS TO RUN IN CHASE 2 HR RATED CYP CHASE FIRESAFED/SMOKESTOPPING AT FLOOR PENETRATIONS.

SHEET NOTES

A. WALL MOUNTED TOILET TO AVOID CONFLICTS WITH RATED SPACES BELOW
B. TRASH ROOM TO BE AIR CONDITIONED
C. LIFT UNDER SEPARATE PERMIT
D. ALL INTERIOR FINISHES TO COMPLY WITH FBC CHAPTER 8. SEE G-012, SECTION F FOR DETAILS.
E. ALL WOOD USED THROUGHOUT SHALL BE INHERENTLY FIRE RETARDANT
F. ALL GUEST ROOM ENTRY DOORS AND CORRIDOR DOORS TO BE 1 HOUR RATED

1

LEGEND

EXISTING PARTITION TO REMAIN
NEW PARTITION
NEW CMU PARTITION
N.L.C. SHADING
EXISTING STRUCTURE
GWB CEILING/SOFFIT
EXISTING DOOR TO REMAIN
DOOR NUMBER
NEW DOOR
ELEVATION REFERENCE
DETAIL REFERENCE
HOSE BIB
F.S. FLOOR SINK
FD.-FLOOR DRAIN
W.-WASTE OUTLET
TD - TRENCH DRAIN
LEVEL CHANGE

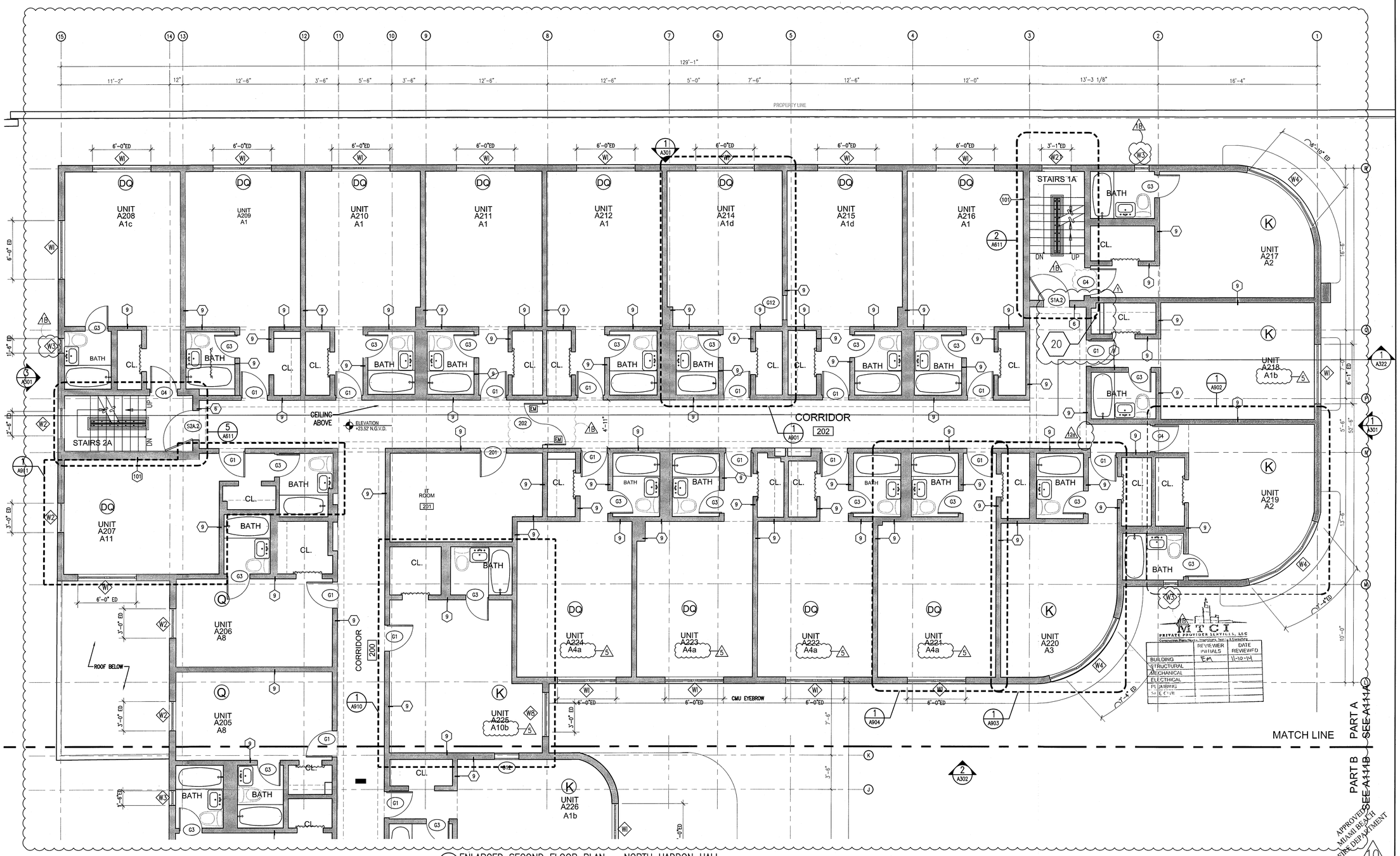

1 ENLARGED SECOND FLOOR PLAN – NORTH HADDON HALL
SCALE: 1/4" = 1'-0"

HADDON HALL
1500 COLLINS AVE.
MIAMI BEACH, FL

KEYPLAN N.T.S.

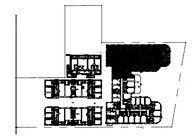

REVISIONS

NO.	DESCRIPTION	ISSUE DATE
1	PROGRESS TO 100% CD	02-18-2014
1B	DOOR-WINDOW COORD.	03-5-2014
5	GUESTROOM COORDINATION	04-17-2014
10	MASTER PERMIT COMMENTS	07-03-2014
12A	FIRE PERMIT COMMENTS	09-29-2014

100% CONSTRUCTION DOCUMENT SET

NORTH SEAL

10.9.14
Jonathan Cardello
Lic. # AR93391

ADD Inc Architecture Interiors Planning

One Biscayne Tower
Suite 1670
Two South
Biscayne Boulevard
Miami, Fl 33131
T. 305.482.8700
F. 305.482.8770
www.addinc.com
Lic. # AA26001507

Boston Miami

JOB NUMBER:	13036.00
CHECKED BY:	
ISSUE DATE:	FEBRUARY 18, 2014
SCALE:	1/4" = 1'-0"

SHEET TITLE

ENLARGED SECOND FLOOR PLAN - NORTH AREA 'A'

SHEET NUMBER

A112a1

COPYRIGHT ADD INC 2011

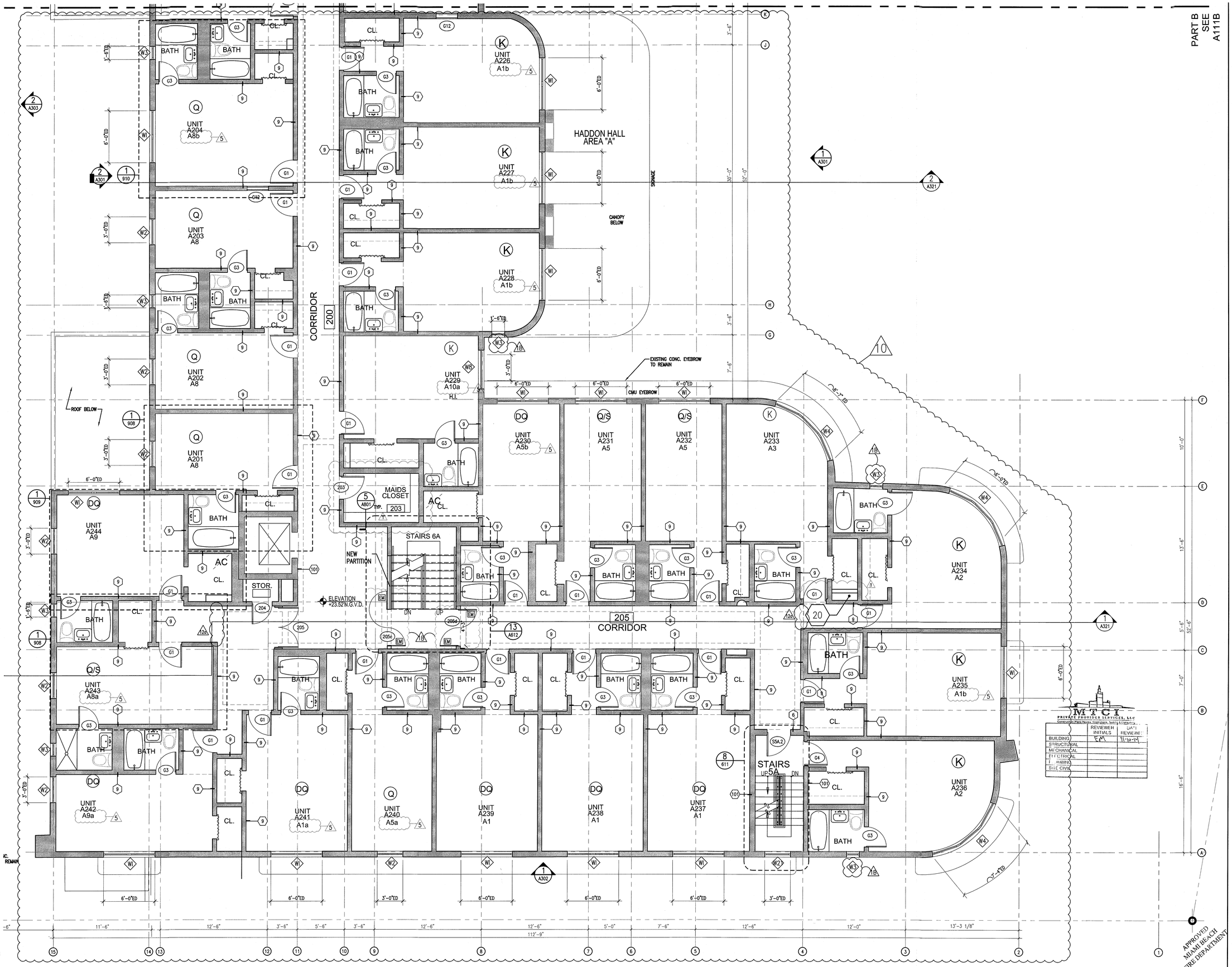

1 ENLARGED SECOND FLOOR PLAN – SOUTH WING HADDON HALL
SCALE: 1/4" = 1'-0"

REFER TO SHEET A111a1FOR NOTES AND LEGEND

HADDON HALL
1500 COLLINS AVE
MIAMI BEACH, FL

KEYPLAN N.T.S.

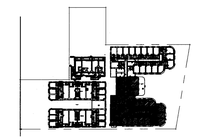

REVISIONS

NO.	DESCRIPTION	ISSUE DATE
1	PROGRESS TO 100% CD	02-18-2014
1B	DOOR-WINDOW COORD.	03-5-2014
5	GUESTROOM COORDINATION	04-17-2014
10	MASTER PERMIT COMMENTS	07-03-2014
22	FIRE PERMIT COMMENTS	09-29-2014

100% CONSTRUCTION DOCUMENT SET

NORTH SEAL

Jonathan Cardello
Lic. # AR93391

ADD Inc Architecture Interiors Planning

One Biscayne Tower
Suite 1670
Two South
Biscayne Boulevard
Miami, Fl 33131
T. 305.482.8700
F. 305.482.8770
www.addinc.com
Lic. # AA26001507

Boston Miami

M C I
PRIVATE PROVIDER SERVICES, LLC

	REVIEWER INITIALS	DATE REVIEWED
BUILDING	EM	11-18-14
STRUCTURAL		
MECHANICAL		
ELECTRICAL		
PLUMBING		
SITE CIVIL		

JOB NUMBER: 13036.00
CHECKED BY:
ISSUE DATE: FEBRUARY 18, 2014
SCALE: 1/4" = 1'-0"

SHEET TITLE

ENLARGED SECOND FLOOR PLAN - SOUTH AREA 'A'

SHEET NUMBER

A112a2

COPYRIGHT ADD INC 2011

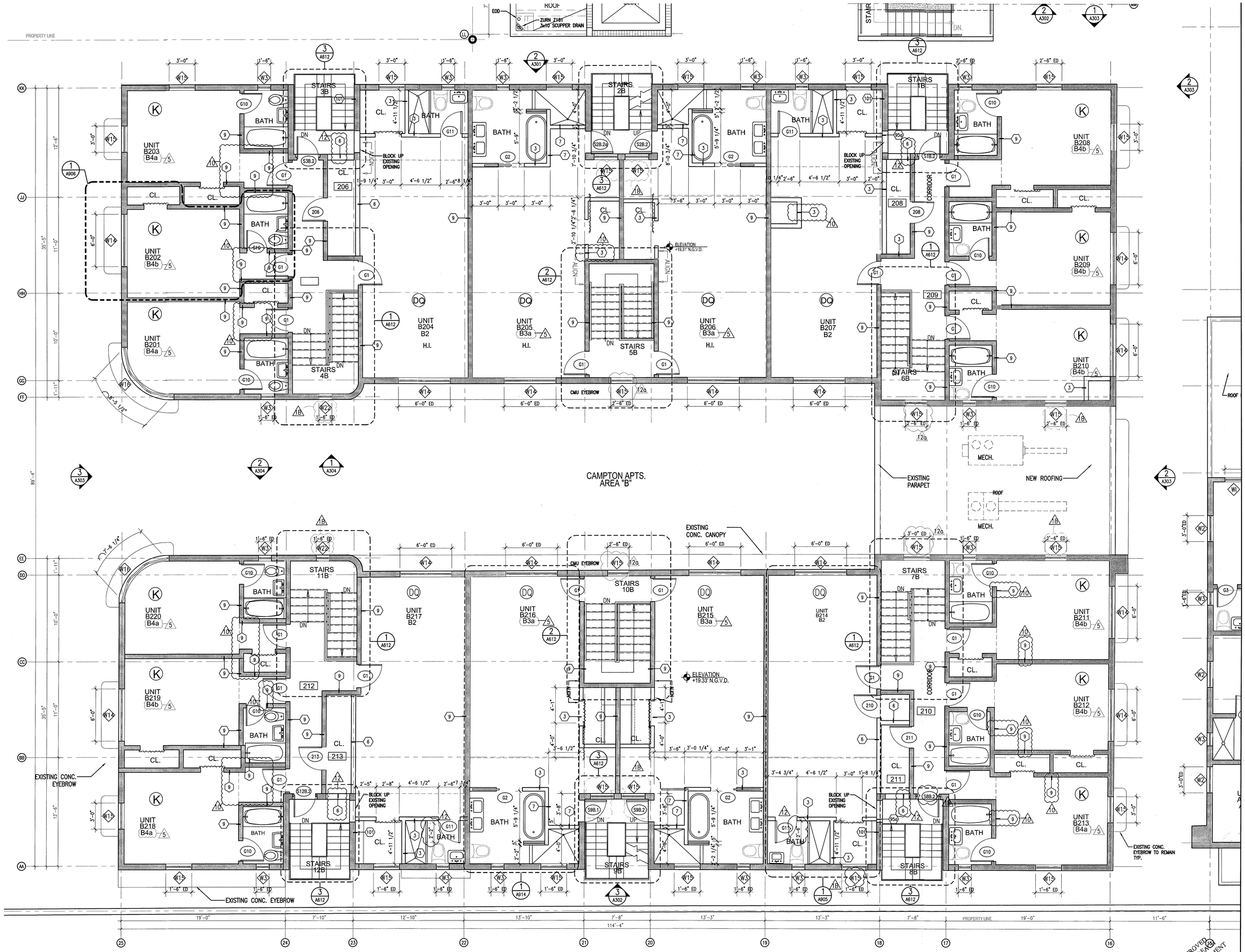

1 ENLARGED AREA B SECOND FLOOR PLAN
SCALE: 1/4" = 1'-0"

REFER TO SHEET A111a1 FOR NOTES AND LEGEND

HADDON HALL
1500 COLLINS AVE
MIAMI BEACH, FL

KEYPLAN N.T.S.

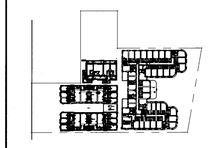

REVISIONS		
NO.	DESCRIPTION	ISSUE DATE
1B	DOOR-WINDOW COORD.	03-5-2014
5	GUESTROOM COORDINATION	04-17-2014
10	MASTER PERMIT COMMENTS	07-03-2014
12	FIRE & MTCI PERMIT COMMENTS	08-21-2014
12a	FIRE & MTCI PERMIT COMMENTS	09-29-2014

MTCI PRIVATE PROVIDER SERVICES, LLC
Construction Plans Review, Inspections, Testing & Consulting

	REVIEWER INITIALS	DATE REVIEWED
BUILDING	EM	11-10-14
STRUCTURAL		
MECHANICAL		
ELECTRICAL		
PLUMBING		
SITE CIVIL		

100% CONSTRUCTION DOCUMENT SET

NORTH SEAL

10.9.14
Jonathan Cardello
Lic. # AR93391

ADD Inc Architecture Interiors Planning

One Biscayne Tower
Suite 1670
Two South
Biscayne Boulevard
Miami, Fl 33131
T. 305.482.8700
F. 305.482.8770
www.addinc.com
Lic. # AA26001507

Boston Miami

JOB NUMBER:	13036.00
CHECKED BY:	
ISSUE DATE:	FEBRUARY 18, 2014
SCALE:	1/4" = 1'-0"

SHEET TITLE

ENLARGED PLAN
SECOND FLOOR
AREA 'B'

SHEET NUMBER

A112b

COPYRIGHT ADD INC 2011

GENERAL NOTES

1. NOTIFY THE ARCHITECT OF ANY UNEXPECTED FIELD CONDITION OR ANY DISCREPANCY BEFORE PROCEEDING. GENERAL CONTRACTOR IS TO COORDINATE THE COMPLETE SCOPE OF WORK WITH CONSTRUCTION DOCUMENTS.
2. PROVIDE TEMPORARY SECURE ACCESS TO SPACE THROUGH CONSTRUCTION AND TEMPORARY LIGHT & POWER.
3. PROVIDE STRICT CONTROL OF JOB CLEANING AND PREVENT DUST AND DEBRIS FROM EMANATING FROM CONSTRUCTION AREA. GENERAL CONTRACTOR SHALL MAINTAIN THE PREMISES CLEAN AND FREE OF TRASH AND DEBRIS DURING CONSTRUCTION.
4. CAP AND SHUT OFF ALL UNUSED UTILITIES PER CITY AND STATE REQUIREMENTS, WHERE REQUIRED.
5. PROVIDE TEMPORARY FIRE / SAFETY DEVICES THROUGHOUT CONSTRUCTION. SECURE DEVICES AS NECESSARY.
6. PROTECT ALL BASE BUILDING SERVICES, TYPICAL.
7. ALL REQUIREMENTS FOR FIRE RATINGS TO BE MAINTAINED DURING CONSTRUCTION.
8. THIS PROJECT INVOLVES CONSTRUCTION INSIDE AN EXISTING STRUCTURE. CONTRACTORS, BY SUBMITTING A BID, ARE DEEMED TO BE COMPLETELY FAMILIAR WITH THE EXISTING CONDITION OF THE BUILDING. AS IT INFLUENCES THE WORK DESCRIBED. ABSOLUTELY NO CLAIMS FOR EXTRA COMPENSATION WILL BE CONSIDERED FOR EXISTING CONDITIONS VISIBLE OR REASONABLY INFERABLE FROM A CAREFUL EXAMINATION OF THE EXISTING BLDG.
9. THE CONTRACTOR SHALL INSPECT THE EXISTING FIELD CONDITIONS AT THE SITE PRIOR TO THE START OF ANY WORK TO DETERMINE WHAT EFFECT THE EXISTING CONDITIONS WILL HAVE ON THEIR WORK. POTENTIAL PROBLEM AREAS SHALL BE BROUGHT TO THE ATTN. OF THE ARCHITECT AND/OR ENGINEER IMMEDIATELY.
10. SHUTDOWN OF EXISTING SYSTEMS FOR CONNECTION TO EXISTING SERVICES SHALL BE COORDINATED WITH THE CONSTRUCTION MANAGER AND BUILDING OWNER. THE CONTRACTOR SHALL SUBMIT REQUESTS, WHERE THEY AFFECT THE OPERATION OF THE BUILDING SYSTEMS, AT LEAST ONE WEEK IN ADVANCE OF ANY REQUIRED SHUTDOWN. THE ACTUAL SHUTDOWN PERIOD SHALL BE AS SHORT AS POSSIBLE AND AT A TIME MUTUALLY AGREEABLE TO THE BUILDING OWNER AND THE CONSTRUCTION MANAGER.
11. ELECTRICAL DEVICES SHALL BE TERMINATED IN A SAFE AND PROPER METHOD BY A LICENSED PROFESSIONAL.
12. ALL WORK SHALL CONFORM WITH ALL APPLICABLE CITY, STATE, AND FEDERAL CODES AND REGULATIONS.
13. ARCHITECT TO REVIEW WALL LAYOUTS PRIOR TO CONSTRUCTION.
14. EXTREME CARE SHALL BE EXERCISED IN CUTTING, DRILLING, ANCHORING, ETC. TO THE EXISTING STRUCTURE. IF ANY DETERIORATION, OR DAMAGE TO THE EXISTING STRUCTURE OCCURS DURING CONSTRUCTION, IT SHALL BE PROMPTLY BROUGHT TO THE ATTENTION OF THE ARCHITECT.
15. REFER TO ENGINEERING DRAWINGS FOR ALL POWER, DATA, MECHANICAL, PLUMBING, & SECURITY REQUIREMENTS, LOCATIONS, AND SPECIFICATIONS. GENERAL CONTRACTOR TO COORDINATE WITH ARCHITECTURAL DOCUMENTS, AND TO NOTIFY ARCHITECT OF ANY DISCREPANCIES / CONFLICTS.
16. REFER TO STRUCTURAL DRAWINGS FOR ALL SLAB THICKNESS VARIANCES, TRANSFER BEAM LOCATIONS, AND OTHER STRUCTURAL SPECIFICATIONS. GENERAL CONTRACTOR TO COORDINATE WITH ARCHITECTURAL DOCUMENTS, AND TO NOTIFY ARCHITECT OF ANY DISCREPANCIES / CONFLICTS.
17. ANY NECESSARY FIRE EXTINGUISHERS ARE TO BE LOCATED IN RECESSED CABINETS WITH DOORS. COORDINATE LOCATIONS WITH ARCHITECT.
18. ALL EXISTING EXPOSED CMU BLOCK / CONCRETE AREAS (WALLS AND FLOORS) TO BE PATCHED, FILLED, AND SKIM COATED WITH NEW ANTI-CRACKING SUBSTRATE, AND SEALED.
19. ALL BATHROOMS AND WET AREAS TO RECEIVE 5/8" DUROCK ON WALLS AND CEILINGS.
20. REFRIGERANT LINE RISERS TO RUN IN CHASE 2 HR RATED CYP CHASE FIRESAFED/SMOKESTOPPING AT FLOOR PENETRATIONS. 1

SHEET NOTES

A. WALL MOUNTED TOILET TO AVOID CONFLICTS WITH RATED SPACES BELOW
B. TRASH ROOM TO BE AIR CONDITIONED
C. LIFT UNDER SEPARATE PERMIT
D. ALL INTERIOR FINISHES TO COMPLY WITH FBC CHAPTER 8. SEE G-012, SECTION F FOR DETAILS.
E. ALL WOOD USED THROUGHOUT SHALL BE INHERENTLY FIRE RETARDANT
F. ALL GUEST ROOM ENTRY DOORS AND CORRIDOR DOORS TO BE 1 HOUR RATED

LEGEND

EXISTING PARTITION TO REMAIN
NEW PARTITION
NEW CMU PARTITION
N.I.C. SHADING
EXISTING STRUCTURE
GWB CEILING/SOFFIT
EXISTING DOOR TO REMAIN
DOOR NUMBER NEW DOOR
ELEVATION REFERENCE
DETAIL REFERENCE
HOSE BIB
F.S. FLOOR SINK
FD.-FLOOR DRAIN
W.-WASTE OUTLET
TD - TRENCH DRAIN
LEVEL CHANGE

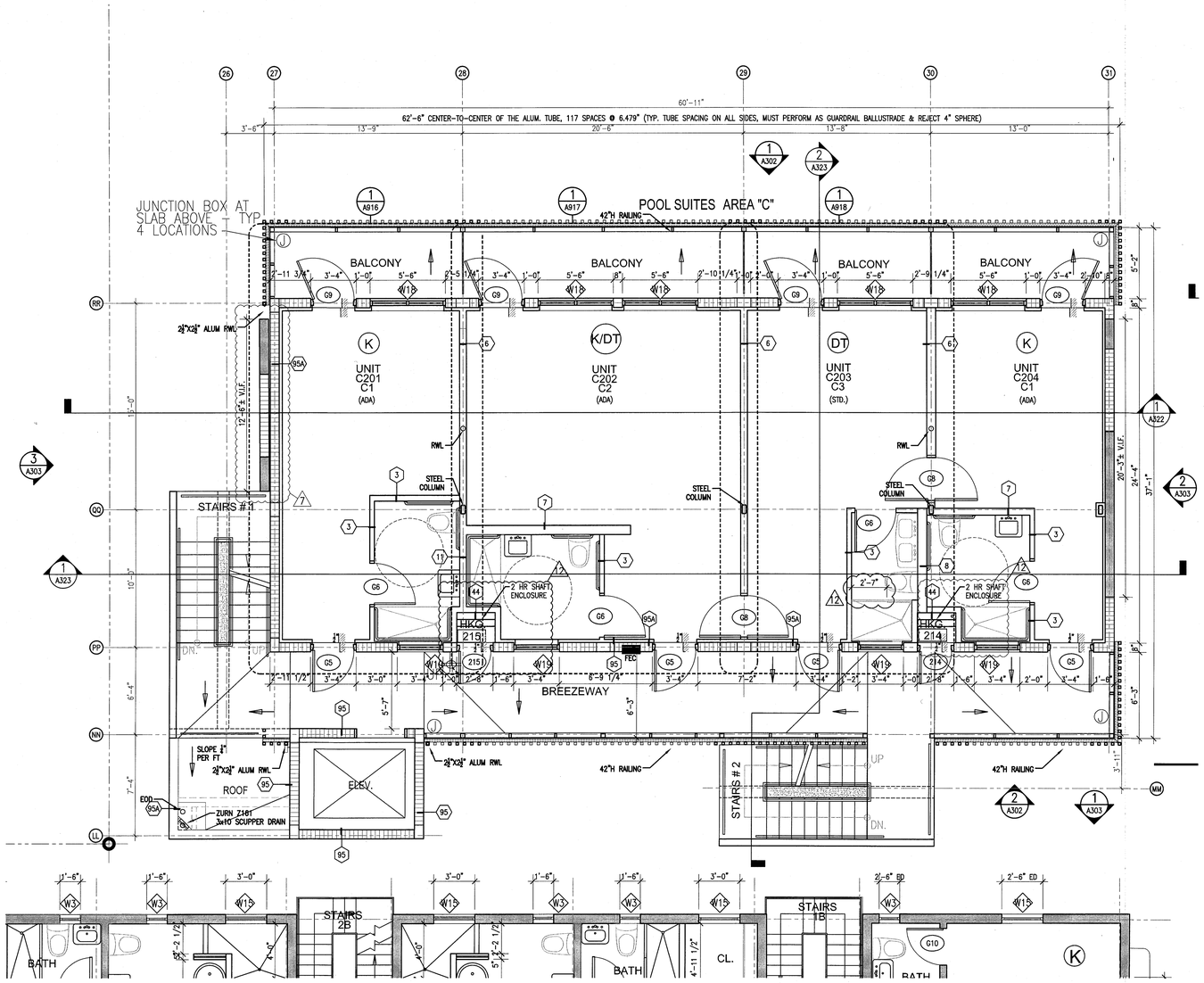

1 ENLARGED 2ND FLOOR PLAN – AREA 'C'
SCALE: 1/4" = 1'-0"

HADDON HALL
1500 COLLINS AVE
MIAMI BEACH, FL

KEYPLAN N.T.S.

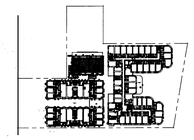

REVISIONS

NO.	DESCRIPTION	ISSUE DATE
7	POOL SUITES WALLS	04-14-2014
12	FIRE & MTCI PERMIT COMMENTS	08-21-2014

MTCI PRIVATE PROVIDER SERVICES, LLC
Construction Plans Review, Inspections, Testing & Consulting

	REVIEWER INITIALS	DATE REVIEWED
BUILDING	EM	11-10-14
STRUCTURAL		
MECHANICAL		
ELECTRICAL		
PLUMBING		
SITE CIVIL		

100% CONSTRUCTION DOCUMENT SET

NORTH SEAL

9.3.14
Jonathan Cardello
Lic. # AR93391

ADD Inc Architecture Interiors Planning

One Biscayne Tower
Suite 1670
Two South
Biscayne Boulevard
Miami, Fl 33131
T. 305.482.8700
F. 305.482.8770
www.addinc.com
Lic. # AA26001507

Boston Miami

JOB NUMBER: 13036.00
CHECKED BY:
ISSUE DATE: FEBRUARY 18, 2014
SCALE: 1/4" = 1'-0"

SHEET TITLE

ENLARGED 2ND FLOOR PLAN AREA 'C'

SHEET NUMBER

A112c

COPYRIGHT ADD INC 2011

APPROVED MIAMI BEACH FIRE DEPARTMENT

GENERAL NOTES

1. NOTIFY THE ARCHITECT OF ANY UNEXPECTED FIELD CONDITION OR ANY DISCREPANCY BEFORE PROCEEDING. GENERAL CONTRACTOR IS TO COORDINATE THE COMPLETE SCOPE OF WORK WITH CONSTRUCTION DOCUMENTS.
2. PROVIDE TEMPORARY SECURE ACCESS TO SPACE THROUGH CONSTRUCTION AND TEMPORARY LIGHT & POWER.
3. PROVIDE STRICT CONTROL OF JOB CLEANING AND PREVENT DUST AND DEBRIS FROM EMANATING FROM CONSTRUCTION AREA. GENERAL CONTRACTOR SHALL MAINTAIN THE PREMISES CLEAN AND FREE OF TRASH AND DEBRIS DURING CONSTRUCTION.
4. CAP AND SHUT OFF ALL UNUSED UTILITIES PER CITY AND STATE REQUIREMENTS, WHERE REQUIRED.
5. PROVIDE TEMPORARY FIRE / SAFETY DEVICES THROUGHOUT CONSTRUCTION. SECURE DEVICES AS NECESSARY.
6. PROTECT ALL BASE BUILDING SERVICES, TYPICAL.
7. ALL REQUIREMENTS FOR FIRE RATINGS TO BE MAINTAINED DURING CONSTRUCTION.
8. THIS PROJECT INVOLVES CONSTRUCTION INSIDE AN EXISTING STRUCTURE. CONTRACTORS, BY SUBMITTING A BID, ARE DEEMED TO BE COMPLETELY FAMILIAR WITH THE EXISTING CONDITION OF THE BUILDING AS IT INFLUENCES THE WORK DESCRIBED. ABSOLUTELY NO CLAIMS FOR EXTRA COMPENSATION WILL BE CONSIDERED FOR EXISTING CONDITIONS VISIBLE OR REASONABLY INFERABLE FROM A CAREFUL EXAMINATION OF THE EXISTING BLDG.
9. THE CONTRACTOR SHALL INSPECT THE EXISTING FIELD CONDITIONS AT THE SITE PRIOR TO THE START OF ANY WORK TO DETERMINE WHAT EFFECT THE EXISTING CONDITIONS WILL HAVE ON THEIR WORK. POTENTIAL PROBLEM AREAS SHALL BE BROUGHT TO THE ATTN. OF THE ARCHITECT AND/OR ENGINEER IMMEDIATELY.
10. SHUTDOWN OF EXISTING SYSTEMS FOR CONNECTION TO EXISTING SERVICES SHALL BE COORDINATED WITH THE CONSTRUCTION MANAGER AND BUILDING OWNER. THE CONTRACTOR SHALL SUBMIT REQUESTS, WHERE THEY AFFECT THE OPERATION OF THE BUILDING SYSTEMS, AT LEAST ONE WEEK IN ADVANCE OF ANY REQUIRED SHUTDOWN. THE ACTUAL SHUTDOWN PERIOD SHALL BE AS SHORT AS POSSIBLE AND AT A TIME MUTUALLY AGREEABLE TO THE BUILDING OWNER AND THE CONSTRUCTION MANAGER.
11. ELECTRICAL DEVICES SHALL BE TERMINATED IN A SAFE AND PROPER METHOD BY A LICENSED PROFESSIONAL.
12. ALL WORK SHALL CONFORM WITH ALL APPLICABLE CITY, STATE, AND FEDERAL CODES AND REGULATIONS.
13. ARCHITECT TO REVIEW WALL LAYOUTS PRIOR TO CONSTRUCTION.
14. EXTREME CARE SHALL BE EXERCISED IN CUTTING, DRILLING, ANCHORING, ETC. TO THE EXISTING STRUCTURE. IF ANY DETERIORATION, OR DAMAGE TO THE EXISTING STRUCTURE OCCURS DURING CONSTRUCTION, IT SHALL BE PROMPTLY BROUGHT TO THE ATTENTION OF THE ARCHITECT.
15. REFER TO ENGINEERING DRAWINGS FOR ALL POWER, DATA, MECHANICAL, PLUMBING, & SECURITY REQUIREMENTS, LOCATIONS, AND SPECIFICATIONS. GENERAL CONTRACTOR TO COORDINATE WITH ARCHITECTURAL DOCUMENTS, AND TO NOTIFY ARCHITECT OF ANY DISCREPANCIES / CONFLICTS.
16. REFER TO STRUCTURAL DRAWINGS FOR ALL SLAB THICKNESS VARIANCES, TRANSFER BEAM LOCATIONS, AND OTHER STRUCTURAL SPECIFICATIONS. GENERAL CONTRACTOR TO COORDINATE WITH ARCHITECTURAL DOCUMENTS, AND TO NOTIFY ARCHITECT OF ANY DISCREPANCIES / CONFLICTS.
17. ANY NECESSARY FIRE EXTINGUISHERS ARE TO BE LOCATED IN RECESSED CABINETS WITH DOORS. COORDINATE LOCATIONS WITH ARCHITECT.
18. ALL EXISTING EXPOSED CMU BLOCK / CONCRETE AREAS (WALLS AND FLOORS) TO BE PATCHED, FILLED, AND SKIM COATED WITH NEW ANTI-CRACKING SUBSTRATE, AND SEALED.
19. ALL BATHROOMS AND WET AREAS TO RECEIVE 5/8" DUROCK ON WALLS AND CEILINGS.
20. REFRIGERANT LINE RISERS TO RUN IN CHASE 2 HR RATED GYP CHASE FIRESAFED/SMOKESTOPPING AT FLOOR PENETRATIONS.

SHEET NOTES

A. WALL MOUNTED TOILET TO AVOID CONFLICTS WITH RATED SPACES BELOW
B. TRASH ROOM TO BE AIR CONDITIONED
C. LIFT UNDER SEPARATE PERMIT
D. ALL INTERIOR FINISHES TO COMPLY WITH FBC CHAPTER 8. SEE G-012, SECTION F FOR DETAILS.
E. ALL WOOD USED THROUGHOUT SHALL BE INHERENTLY FIRE RETARDANT
F. ALL GUEST ROOM ENTRY DOORS AND CORRIDOR DOORS TO BE 1 HOUR RATED

LEGEND

- EXISTING PARTITION TO REMAIN
- NEW PARTITION
- NEW CMU PARTITION
- N.I.C. SHADING
- EXISTING STRUCTURE
- GWB CEILING/SOFFIT
- EXISTING DOOR TO REMAIN
- DOOR NUMBER NEW DOOR
- ELEVATION REFERENCE
- DETAIL REFERENCE
- HB HOSE BIB
- F.S. FLOOR SINK
- FD.-FLOOR DRAIN
- W.-WASTE OUTLET
- TD - TRENCH DRAIN
- LEVEL CHANGE

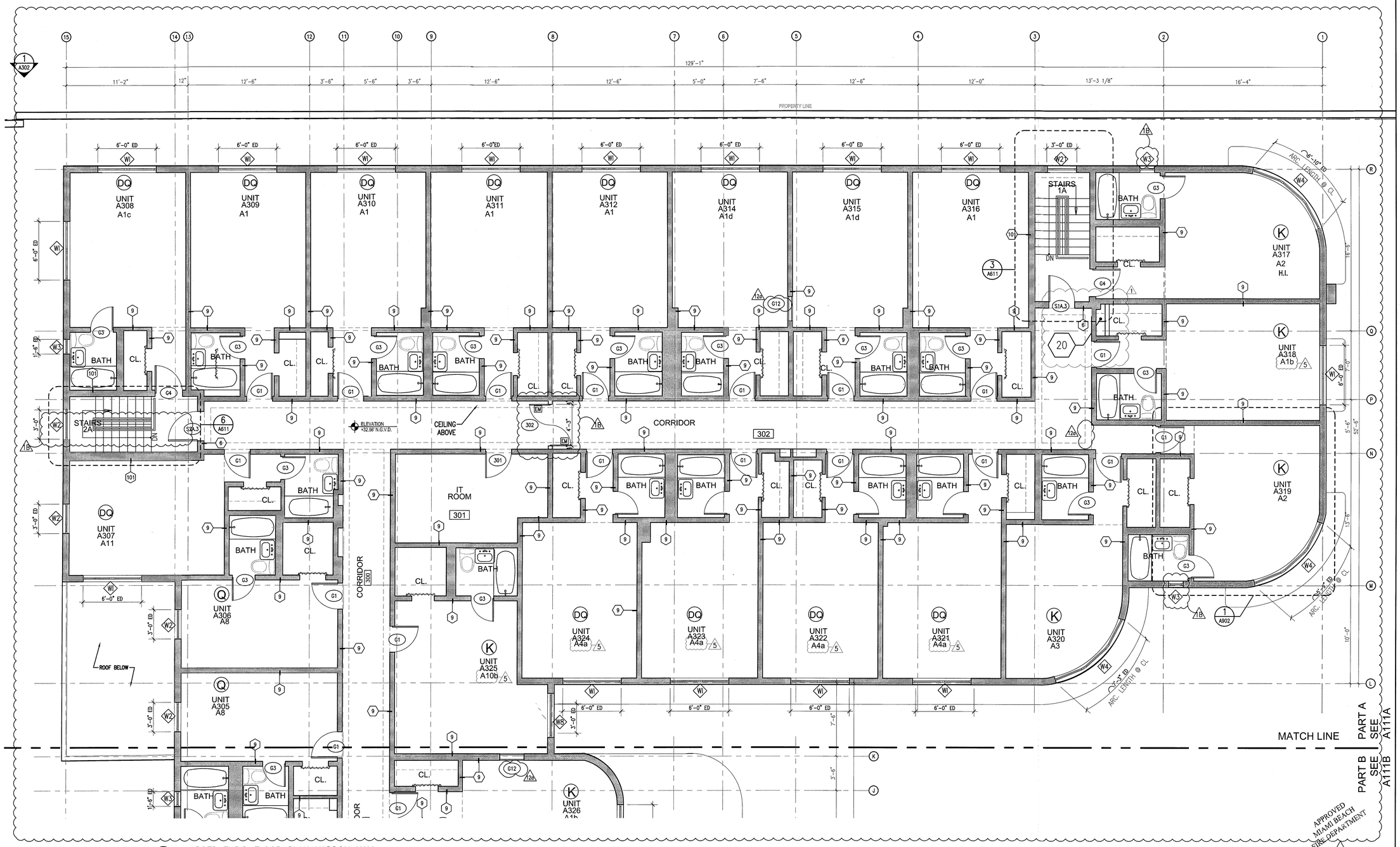

1 ENLARGED THRID FLOOR PLAN HADDON HALL
SCALE: 1/4" = 1'-0"

HADDON HALL
1500 COLLINS AVE
MIAMI BEACH, FL

KEYPLAN N.T.S.

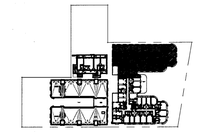

REVISIONS

NO.	DESCRIPTION	ISSUE DATE
1	PROGRESS TO 100% CD	02-18-2014
1B.	DOOR-WINDOW COORD.	03-5-2014
5	GUESTROOM COORDINATION	04-17-2014
10.	MASTER PERMIT COMMENTS	07-03-2014
12A.	FIRE PERMIT COMMENTS	09-29-2014

MTCI PRIVATE PROVIDER SERVICES, LLC
Construction Plans Review, Inspections, Testing & Consulting

	REVIEWER INITIALS	DATE REVIEWED
BUILDING	EM	11-10-14
STRUCTURAL		
MECHANICAL		
ELECTRICAL		
PLUMBING		
SITE CIVIL		

100% CONSTRUCTION DOCUMENT SET

NORTH SEAL

10-9-14
Jonathan Cardello
Lic. # AR93391

ADD Inc Architecture Interiors Planning

One Biscayne Tower
Suite 1670
Two South
Biscayne Boulevard
Miami, Fl 33131
T. 305.482.8700
F. 305.482.8770
www.addinc.com
Lic. # AA26001507

Boston Miami

JOB NUMBER:	13036.00
CHECKED BY:	
ISSUE DATE:	FEBRUARY 18, 2014
SCALE:	1/4" = 1'-0"

SHEET TITLE

ENLARGED THIRD FLOOR PLAN - NORTH AREA 'A'

SHEET NUMBER

A113a1

COPYRIGHT ADD INC 2011

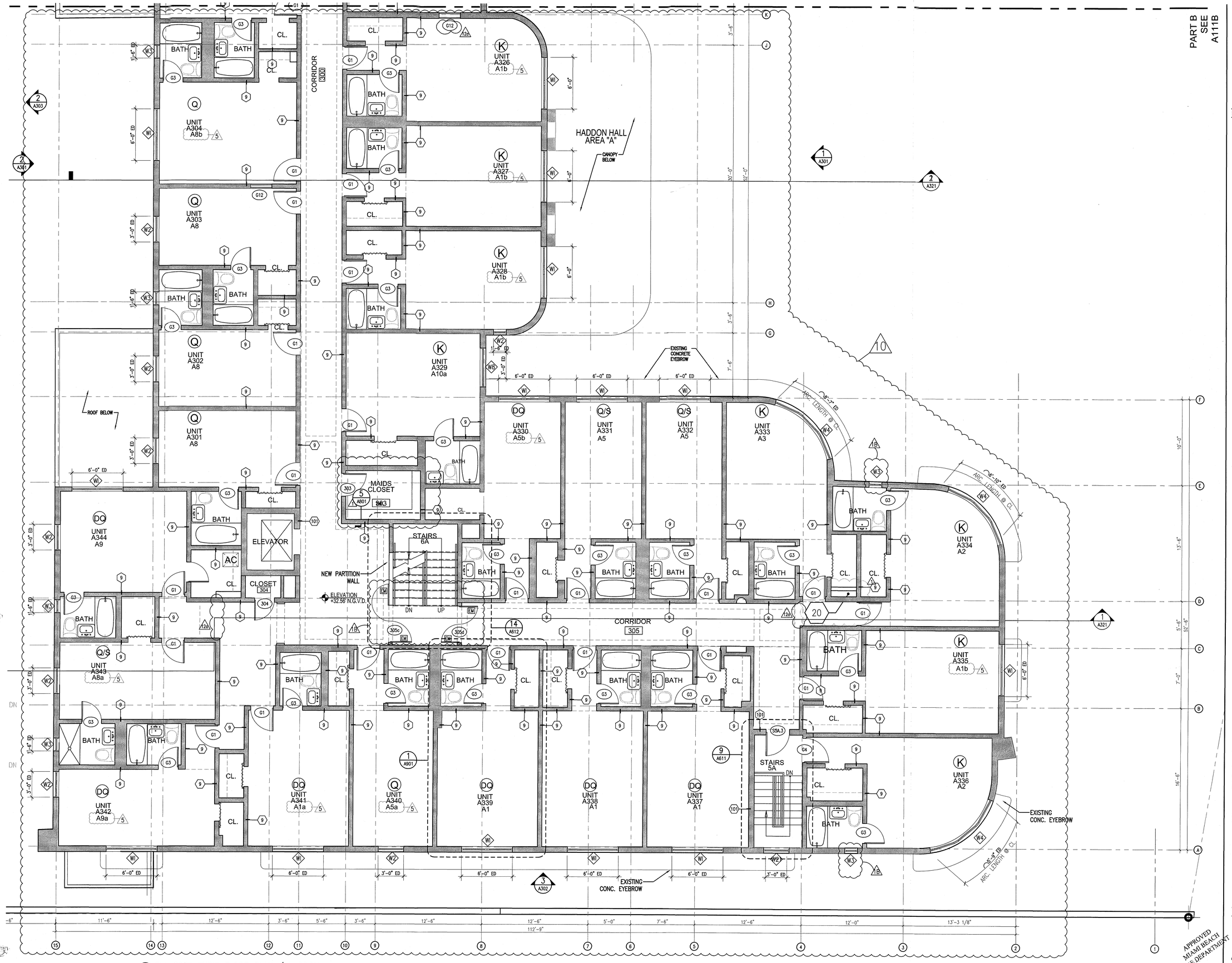

1 ENLARGED THRID FLOOR PLAN / HADDON HALL
SCALE: 1/4" = 1'-0"

REFER TO SHEET A113a1FOR NOTES AND LEGEND

APPROVED MIAMI BEACH FIRE DEPARTMENT

HADDON HALL
1500 COLLINS AVE
MIAMI BEACH, FL

KEYPLAN N.T.S.

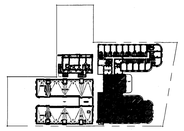

REVISIONS

NO.	DESCRIPTION	ISSUE DATE
1	PROGRESS TO 100% CD	02-18-2014
1B	DOOR-WINDOW COORD.	03-5-2014
5	GUESTROOM COORDINATION	04-17-2014
10	MASTER PERMIT COMMENTS	07-03-2014
12a	FIRE PERMIT COMMENTS	09-29-2014

MTCI
PRIVATE PROVIDER SERVICES, LLC
Construction Plans Review, Inspections, Testing & Consulting

	REVIEWER INITIALS	DATE REVIEWED
BUILDING	EM	11-10-14
STRUCTURAL		
MECHANICAL		
ELECTRICAL		
PLUMBING		
SITE CIVIL		

100% CONSTRUCTION DOCUMENT SET

NORTH SEAL

11-9-14
Jonathan Cardello
Lic. # AR93391

ADD Inc Architecture Interiors Planning

One Biscayne Tower
Suite 1670
Two South
Biscayne Boulevard
Miami, Fl 33131
T. 305.482.8700
F. 305.482.8770
www.addinc.com
Lic. # AA26001507

Boston Miami

JOB NUMBER:	13036.00
CHECKED BY:	
ISSUE DATE:	FEBRUARY 18, 2014
SCALE:	1/4" = 1'-0"

SHEET TITLE

ENLARGED THIRD FLOOR PLAN SOUTH WING AREA 'A'

SHEET NUMBER

A113a2

COPYRIGHT ADD INC 2011

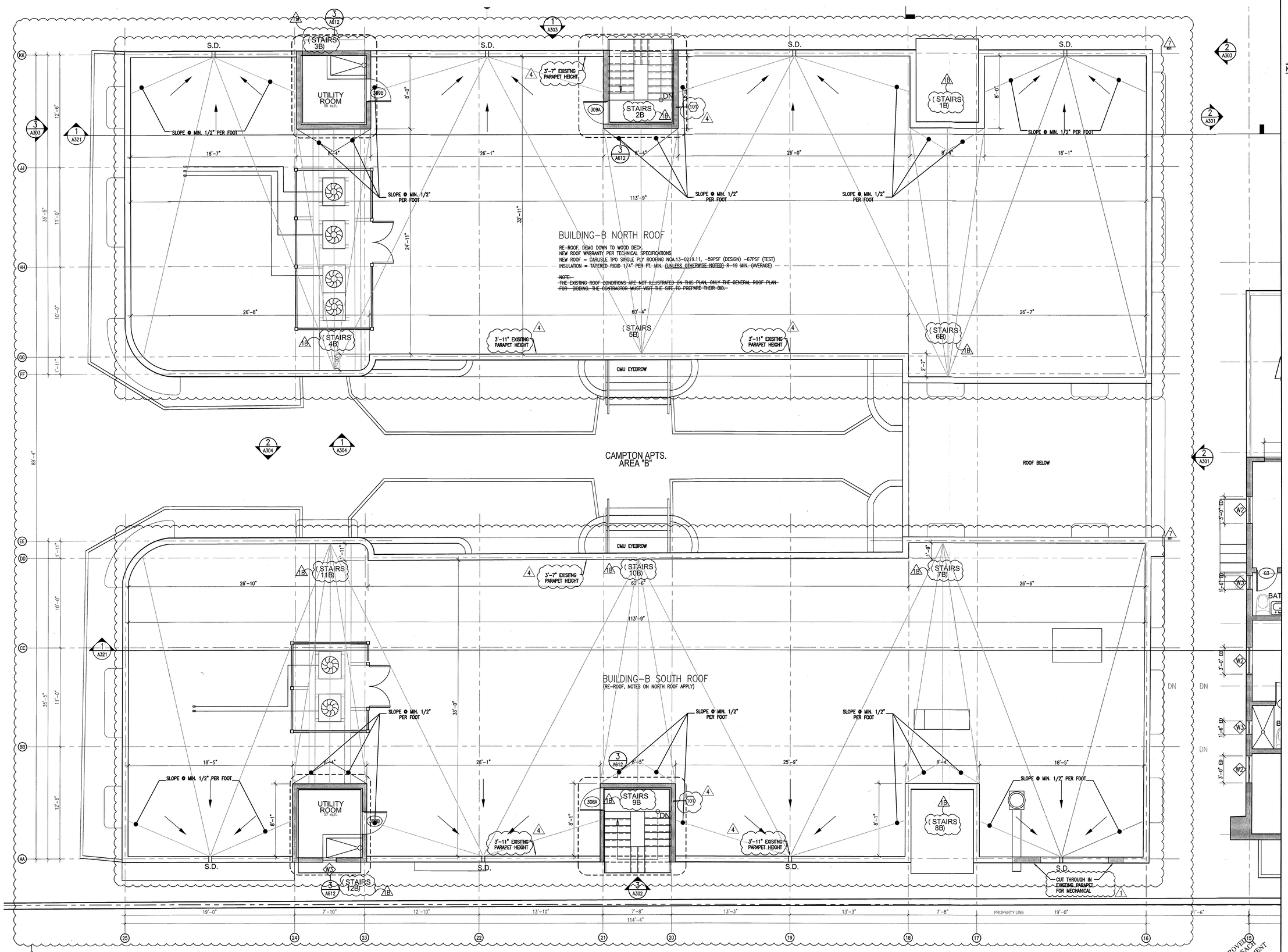

1 ENLARGED AREA B ROOF PLAN
SCALE: 1/4" = 1'-0"

REFER TO SHEET A114a1FOR NOTES AND LEGEND

APPROVED MIAMI BEACH FIRE DEPARTMENT

HADDON HALL
1500 COLLINS AVE
MIAMI BEACH, FL

KEYPLAN N.T.S.

REVISIONS

NO.	DESCRIPTION	ISSUE DATE
1	PROGRESS TO 100% CD	02-18-2014
1B	DOOR-WINDOW COORD.	03-5-2014
4	FIRE REVIEW COMMENTS	04-01-2014
7 RR1	RFI #7	08-20-2014
12	FIRE & MTCI PERMIT COMMENTS	08-21-2014

MTCI
PRIVATE PROVIDER SERVICES, LLC
Construction Plans Review, Inspections, Testing & Consulting

	REVIEWER INITIALS	DATE REVIEWED
BUILDING	EM	11-10-14
STRUCTURAL		
MECHANICAL		
ELECTRICAL		
PLUMBING		
SITE CIVIL		

100% CONSTRUCTION DOCUMENT SET

NORTH SEAL

Jonathan Cardello
Lic. # AR93391

ADD Inc Architecture Interiors Planning

One Biscayne Tower
Suite 1670
Two South
Biscayne Boulevard
Miami, Fl 33131
T. 305.482.8700
F. 305.482.8770
www.addinc.com
Lic. # AA26001507

Boston Miami

JOB NUMBER: 13036.00
CHECKED BY:
ISSUE DATE: FEBRUARY 18, 2014
SCALE: 1/4" = 1'-0"

SHEET TITLE

ENLARGED ROOF PLAN AREA 'B'

SHEET NUMBER

A113b

COPYRIGHT ADD INC 2011

GENERAL NOTES

1. NOTIFY THE ARCHITECT OF ANY UNEXPECTED FIELD CONDITION OR ANY DISCREPANCY BEFORE PROCEEDING. GENERAL CONTRACTOR IS TO COORDINATE THE COMPLETE SCOPE OF WORK WITH CONSTRUCTION DOCUMENTS.
2. PROVIDE TEMPORARY SECURE ACCESS TO SPACE THROUGH CONSTRUCTION AND TEMPORARY LIGHT & POWER.
3. PROVIDE STRICT CONTROL OF JOB CLEANING AND PREVENT DUST AND DEBRIS FROM EMANATING FROM CONSTRUCTION AREA. GENERAL CONTRACTOR SHALL MAINTAIN THE PREMISES CLEAN AND FREE OF TRASH AND DEBRIS DURING CONSTRUCTION.
4. CAP AND SHUT OFF ALL UNUSED UTILITIES PER CITY AND STATE REQUIREMENTS, WHERE REQUIRED.
5. PROVIDE TEMPORARY FIRE / SAFETY DEVICES THROUGHOUT CONSTRUCTION. SECURE DEVICES AS NECESSARY.
6. PROTECT ALL BASE BUILDING SERVICES, TYPICAL.
7. ALL REQUIREMENTS FOR FIRE RATINGS TO BE MAINTAINED DURING CONSTRUCTION.
8. THIS PROJECT INVOLVES CONSTRUCTION INSIDE AN EXISTING STRUCTURE. CONTRACTORS, BY SUBMITTING A BID, ARE DEEMED TO BE COMPLETELY FAMILIAR WITH THE EXISTING CONDITION OF THE BUILDING AS IT INFLUENCES THE WORK DESCRIBED. ABSOLUTELY NO CLAIMS FOR EXTRA COMPENSATION WILL BE CONSIDERED FOR EXISTING CONDITIONS VISIBLE OR REASONABLY INFERABLE FROM A CAREFUL EXAMINATION OF THE EXISTING BLDG.
9. THE CONTRACTOR SHALL INSPECT THE EXISTING FIELD CONDITIONS AT THE SITE PRIOR TO THE START OF ANY WORK TO DETERMINE WHAT EFFECT THE EXISTING CONDITIONS WILL HAVE ON THEIR WORK. POTENTIAL PROBLEM AREAS SHALL BE BROUGHT TO THE ATTN. OF THE ARCHITECT AND/OR ENGINEER IMMEDIATELY.
10. SHUTDOWN OF EXISTING SYSTEMS FOR CONNECTION TO EXISTING SERVICES SHALL BE COORDINATED WITH THE CONSTRUCTION MANAGER AND BUILDING OWNER. THE CONTRACTOR SHALL SUBMIT REQUESTS, WHERE THEY AFFECT THE OPERATION OF THE BUILDING SYSTEMS, AT LEAST ONE WEEK IN ADVANCE OF ANY REQUIRED SHUTDOWN. THE ACTUAL SHUTDOWN PERIOD SHALL BE AS SHORT AS POSSIBLE AND AT A TIME MUTUALLY AGREEABLE TO THE BUILDING OWNER AND THE CONSTRUCTION MANAGER.
11. ELECTRICAL DEVICES SHALL BE TERMINATED IN A SAFE AND PROPER METHOD BY A LICENSED PROFESSIONAL.
12. ALL WORK SHALL CONFORM WITH ALL APPLICABLE CITY, STATE, AND FEDERAL CODES AND REGULATIONS.
13. ARCHITECT TO REVIEW WALL LAYOUTS PRIOR TO CONSTRUCTION.
14. EXTREME CARE SHALL BE EXERCISED IN CUTTING, DRILLING, ANCHORING, ETC. TO THE EXISTING STRUCTURE. IF ANY DETERIORATION, OR DAMAGE TO THE EXISTING STRUCTURE OCCURS DURING CONSTRUCTION, IT SHALL BE PROMPTLY BROUGHT TO THE ATTENTION OF THE ARCHITECT.
15. REFER TO ENGINEERING DRAWINGS FOR ALL POWER, DATA, MECHANICAL, PLUMBING, & SECURITY REQUIREMENTS, LOCATIONS, AND SPECIFICATIONS. GENERAL CONTRACTOR TO COORDINATE WITH ARCHITECTURAL DOCUMENTS, AND TO NOTIFY ARCHITECT OF ANY DISCREPANCIES / CONFLICTS.
16. REFER TO STRUCTURAL DRAWINGS FOR ALL SLAB THICKNESS VARIANCES, TRANSFER BEAM LOCATIONS, AND OTHER STRUCTURAL SPECIFICATIONS. GENERAL CONTRACTOR TO COORDINATE WITH ARCHITECTURAL DOCUMENTS, AND TO NOTIFY ARCHITECT OF ANY DISCREPANCIES / CONFLICTS.
17. ANY NECESSARY FIRE EXTINGUISHERS ARE TO BE LOCATED IN RECESSED CABINETS WITH DOORS. COORDINATE LOCATIONS WITH ARCHITECT.
18. ALL EXISTING EXPOSED CMU BLOCK / CONCRETE AREAS (WALLS AND FLOORS) TO BE PATCHED, FILLED, AND SKIM COATED WITH NEW ANTI-CRACKING SUBSTRATE, AND SEALED.
19. ALL BATHROOMS AND WET AREAS TO RECEIVE 5/8" DUROCK ON WALLS AND CEILINGS.
20. REFRIGERANT LINE RISERS TO RUN IN CHASE 2 HR RATED CYP CHASE FRESAVED/SMOKESTOPPING AT FLOOR PENETRATIONS. (1)

SHEET NOTES

A. WALL MOUNTED TOILET TO AVOID CONFLICTS WITH RATED SPACES BELOW
B. TRASH ROOM TO BE AIR CONDITIONED
C. LIFT UNDER SEPARATE PERMIT
D. ALL INTERIOR FINISHES TO COMPLY WITH FBC CHAPTER 8. SEE G-012, SECTION F FOR DETAILS.
E. ALL WOOD USED THROUGHOUT SHALL BE INHERENTLY FIRE RETARDANT
F. ALL GUEST ROOM ENTRY DOORS AND CORRIDOR DOORS TO BE 1 HOUR RATED

LEGEND

EXISTING PARTITION TO REMAIN
NEW PARTITION
NEW CMU PARTITION
N.I.C. SHADING
EXISTING STRUCTURE
GWB CEILING/SOFFIT
EXISTING DOOR TO REMAIN
DOOR NUMBER NEW DOOR
ELEVATION REFERENCE
DETAIL REFERENCE
HOSE BIB
F.S. FLOOR SINK
FD.-FLOOR DRAIN
W.-WASTE OUTLET
TD - TRENCH DRAIN
LEVEL CHANGE

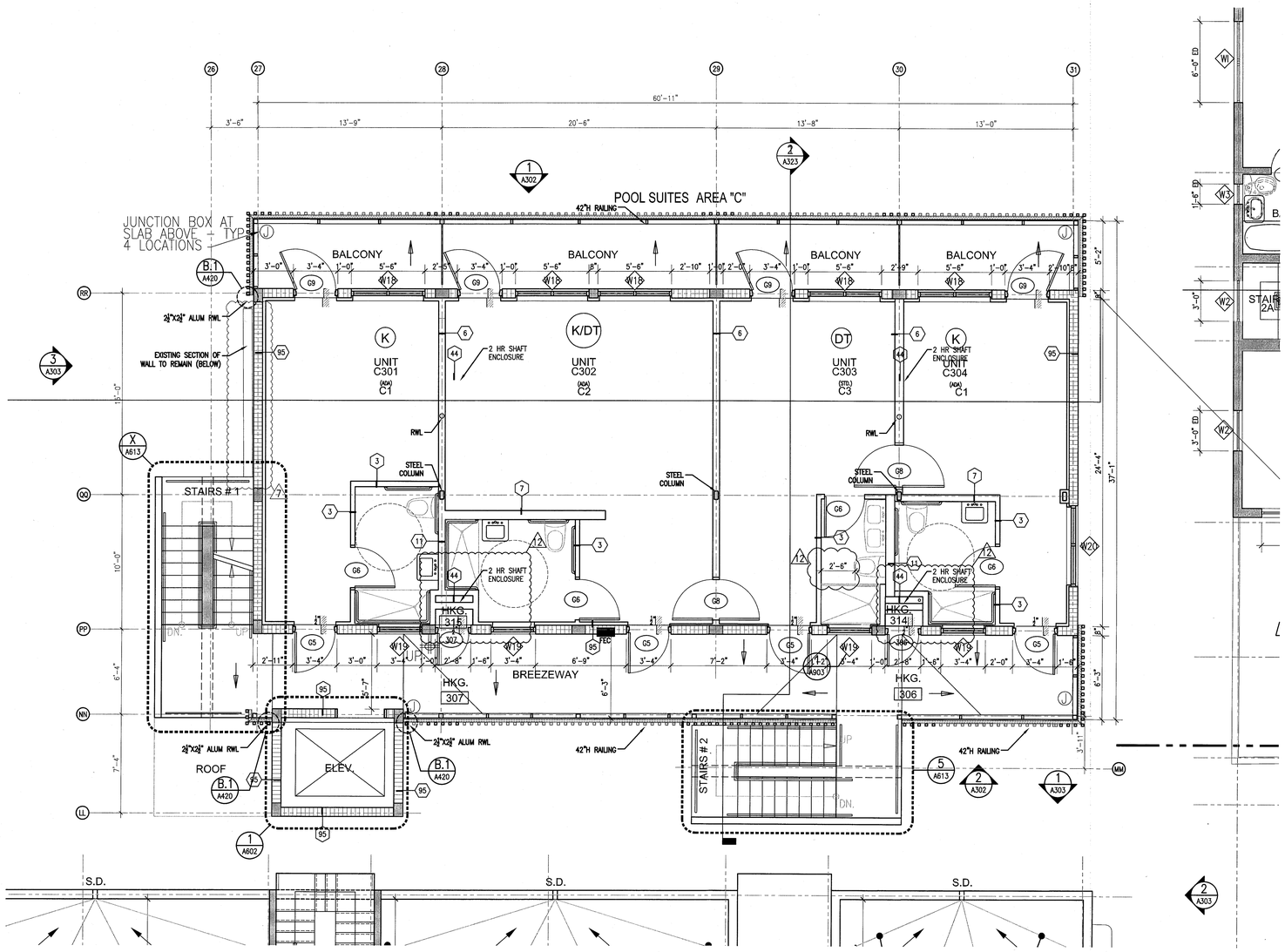

1 ENLARGED 3RD FLOOR PLAN – AREA 'C'
SCALE: 1/4" = 1'-0"

HADDON HALL
1500 COLLINS AVE
MIAMI BEACH, FL

KEYPLAN N.T.S.

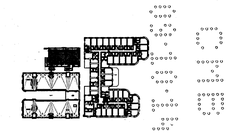

REVISIONS

NO.	DESCRIPTION	ISSUE DATE
7	POOL SUITES WALLS	04-14-2014
12	FIRE & MTCI PERMIT COMMENTS	08-21-2014

MTCI PRIVATE PROVIDER SERVICES, LLC
Construction Plans Review, Inspections, Testing & Consulting

	REVIEWER INITIALS	DATE REVIEWED
BUILDING	BM	11-10-14
STRUCTURAL		
MECHANICAL		
ELECTRICAL		
PLUMBING		
SITE CIVIL		

100% CONSTRUCTION DOCUMENT SET

NORTH SEAL

9.3.14
Jonathan Cardello
Lic. # AR93391

ADD Inc Architecture Interiors Planning

One Biscayne Tower
Suite 1670
Two South
Biscayne Boulevard
Miami, Fl 33131
T. 305.482.8700
F. 305.482.8770
www.addinc.com
Lic. # AA26001507

Boston Miami

JOB NUMBER:	13036.00
CHECKED BY:	
ISSUE DATE:	FEBRUARY 18, 2014
SCALE:	1/4" = 1'-0"

SHEET TITLE

ENLARGED 3RD FLOOR PLAN AREA 'C'

SHEET NUMBER

A113c

COPYRIGHT ADD INC 2011

APPROVED MIAMI BEACH FIRE DEPARTMENT

GENERAL NOTES

1. NOTIFY THE ARCHITECT OF ANY UNEXPECTED FIELD CONDITION OR ANY DISCREPANCY BEFORE PROCEEDING. GENERAL CONTRACTOR IS TO COORDINATE THE COMPLETE SCOPE OF WORK WITH CONSTRUCTION DOCUMENTS.
2. PROVIDE TEMPORARY SECURE ACCESS TO SPACE THROUGH CONSTRUCTION AND TEMPORARY LIGHT & POWER.
3. PROVIDE STRICT CONTROL OF JOB CLEANING AND PREVENT DUST AND DEBRIS FROM EMANATING FROM CONSTRUCTION AREA. GENERAL CONTRACTOR SHALL MAINTAIN THE PREMISES CLEAN AND FREE OF TRASH AND DEBRIS DURING CONSTRUCTION.
4. CAP AND SHUT OFF ALL UNUSED UTILITIES PER CITY AND STATE REQUIREMENTS, WHERE REQUIRED.
5. PROVIDE TEMPORARY FIRE / SAFETY DEVICES THROUGHOUT CONSTRUCTION. SECURE DEVICES AS NECESSARY.
6. PROTECT ALL BASE BUILDING SERVICES, TYPICAL.
7. ALL REQUIREMENTS FOR FIRE RATINGS TO BE MAINTAINED DURING CONSTRUCTION.
8. THIS PROJECT INVOLVES CONSTRUCTION INSIDE AN EXISTING STRUCTURE. CONTRACTORS, BY SUBMITTING A BID, ARE DEEMED TO BE COMPLETELY FAMILIAR WITH THE EXISTING CONDITION OF THE BUILDING AS IT INFLUENCES THE WORK DESCRIBED. ABSOLUTELY NO CLAIMS FOR EXTRA COMPENSATION WILL BE CONSIDERED FOR EXISTING CONDITIONS VISIBLE OR REASONABLY INFERABLE FROM A CAREFUL EXAMINATION OF THE EXISTING BLDG.
9. THE CONTRACTOR SHALL INSPECT THE EXISTING FIELD CONDITIONS AT THE SITE PRIOR TO THE START OF ANY WORK TO DETERMINE WHAT EFFECT THE EXISTING CONDITIONS WILL HAVE ON THEIR WORK. POTENTIAL PROBLEM AREAS SHALL BE BROUGHT TO THE ATTN. OF THE ARCHITECT AND/OR ENGINEER IMMEDIATELY.
10. SHUTDOWN OF EXISTING SYSTEMS FOR CONNECTION TO EXISTING SERVICES SHALL BE COORDINATED WITH THE CONSTRUCTION MANAGER AND BUILDING OWNER. THE CONTRACTOR SHALL SUBMIT REQUESTS, WHERE THEY AFFECT THE OPERATION OF THE BUILDING SYSTEMS, AT LEAST ONE WEEK IN ADVANCE OF ANY REQUIRED SHUTDOWN. THE ACTUAL SHUTDOWN PERIOD SHALL BE AS SHORT AS POSSIBLE AND AT A TIME MUTUALLY AGREEABLE TO THE BUILDING OWNER AND THE CONSTRUCTION MANAGER.
11. ELECTRICAL DEVICES SHALL BE TERMINATED IN A SAFE AND PROPER METHOD BY A LICENSED PROFESSIONAL.
12. ALL WORK SHALL CONFORM WITH ALL APPLICABLE CITY, STATE, AND FEDERAL CODES AND REGULATIONS.
13. ARCHITECT TO REVIEW WALL LAYOUTS PRIOR TO CONSTRUCTION.
14. EXTREME CARE SHALL BE EXERCISED IN CUTTING, DRILLING, ANCHORING, ETC. TO THE EXISTING STRUCTURE. IF ANY DETERIORATION, OR DAMAGE TO THE EXISTING STRUCTURE OCCURS DURING CONSTRUCTION, IT SHALL BE PROMPTLY BROUGHT TO THE ATTENTION OF THE ARCHITECT.
15. REFER TO ENGINEERING DRAWINGS FOR ALL POWER, DATA, MECHANICAL, PLUMBING, & SECURITY REQUIREMENTS, LOCATIONS, AND SPECIFICATIONS. GENERAL CONTRACTOR TO COORDINATE WITH ARCHITECTURAL DOCUMENTS, AND TO NOTIFY ARCHITECT OF ANY DISCREPANCIES / CONFLICTS.
16. REFER TO STRUCTURAL DRAWINGS FOR ALL SLAB THICKNESS VARIANCES, TRANSFER BEAM LOCATIONS, AND OTHER STRUCTURAL SPECIFICATIONS. GENERAL CONTRACTOR TO COORDINATE WITH ARCHITECTURAL DOCUMENTS, AND TO NOTIFY ARCHITECT OF ANY DISCREPANCIES / CONFLICTS.
17. ANY NECESSARY FIRE EXTINGUISHERS ARE TO BE LOCATED IN RECESSED CABINETS WITH DOORS. COORDINATE LOCATIONS WITH ARCHITECT.
18. ALL EXISTING EXPOSED CMU BLOCK / CONCRETE AREAS (WALLS AND FLOORS) TO BE PATCHED, FILLED, AND SKIM COATED WITH NEW ANTI-CRACKING SUBSTRATE, AND SEALED.
19. ALL DRYWORKS AND WET AREAS TO RECEIVE 5/8" DURROCK ON WALLS AND CEILINGS.
20. REFRIGERANT LINE RISERS TO RUN IN CHASE 2 HR RATED CHASE FIRESAFED/SMOKESTOPPING AT FLOOR PENETRATIONS. 1

SHEET NOTES

A. WALL MOUNTED TOILET TO AVOID CONFLICTS WITH RATED SPACES BELOW
B. TRASH ROOM TO BE AIR CONDITIONED
C. LIFT UNDER SEPARATE PERMIT
D. ALL INTERIOR FINISHES TO COMPLY WITH FBC CHAPTER 8, SEE G-012, SECTION F FOR DETAILS.
E. ALL WOOD USED THROUGHOUT SHALL BE INHERENTLY FIRE RETARDANT
F. ALL GUEST ROOM ENTRY DOORS AND CORRIDOR DOORS TO BE 1 HOUR RATED

LEGEND

- EXISTING PARTITION TO REMAIN
- NEW PARTITION
- NEW CMU PARTITION
- A.L.C. SHADING
- EXISTING STRUCTURE
- GWB CEILING/SOFFIT
- EXISTING DOOR TO REMAIN
- DOOR NUMBER NEW DOOR
- ELEVATION REFERENCE
- DETAIL REFERENCE
- HOSE BIB
- F.S. FLOOR SINK
- FD.-FLOOR DRAIN
- W.-WASTE OUTLET
- TD - TRENCH DRAIN
- LEVEL CHANGE

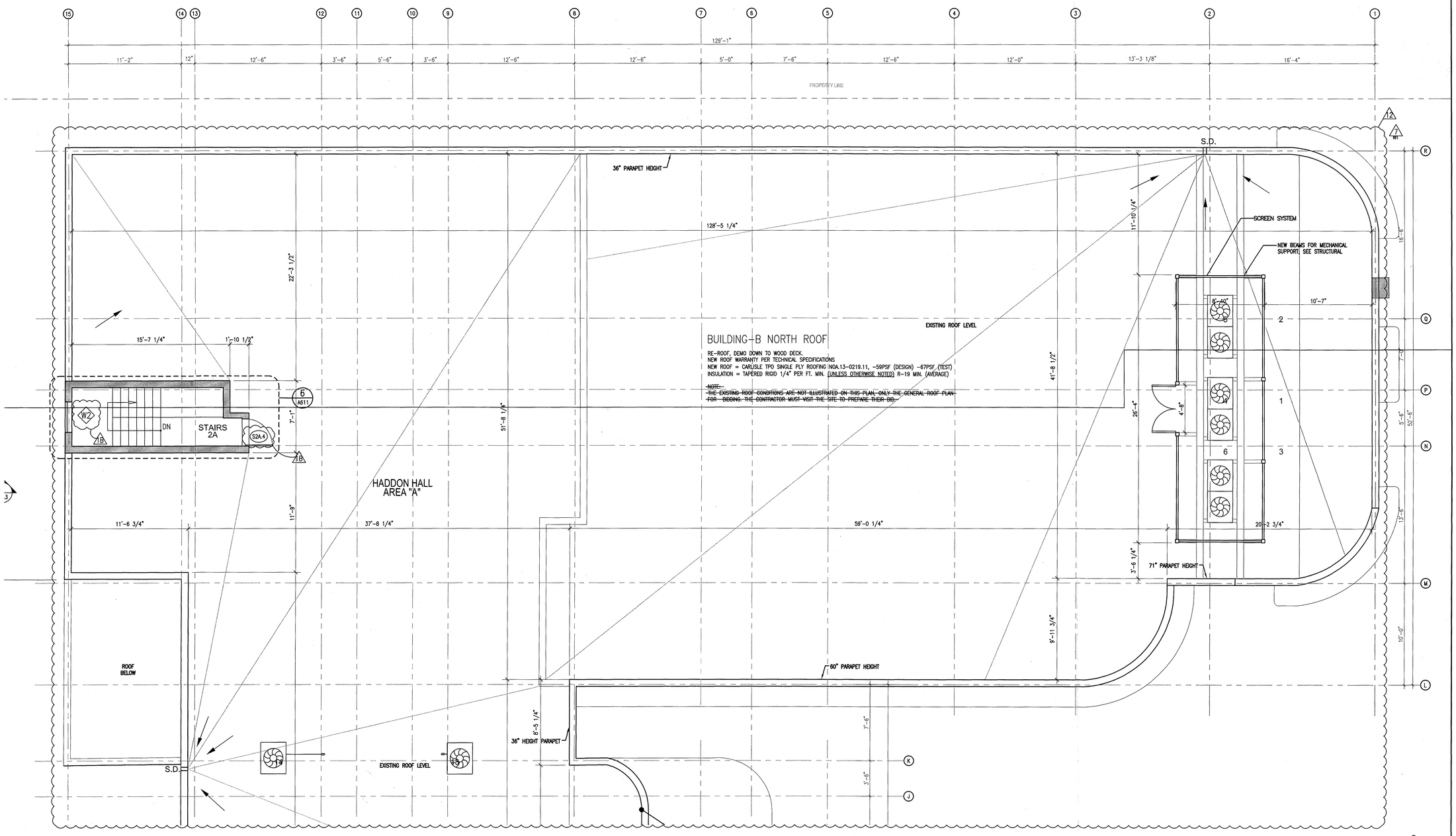

1 ENLARGED ROOF PLAN – NORTH HADDON HALL
SCALE: 1/4" = 1'-0"

APPROVED MIAMI BEACH FIRE DEPARTMENT

HADDON HALL
1500 COLLINS AVE
MIAMI BEACH, FL

KEYPLAN N.T.S.

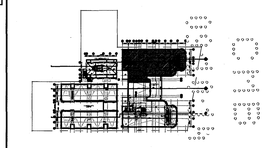

REVISIONS

NO.	DESCRIPTION	ISSUE DATE
1B	DOOR-WINDOW COORD.	03-5-2014
7 RFI #7	RFI #7	08-20-2014
12	FIRE & MTCI PERMIT COMMENTS	08-21-2014

MTCI PRIVATE PROVIDER SERVICES, LLC
Construction Plans Review, Inspections, Testing & Consulting

	REVIEWER INITIALS	DATE REVIEWED
BUILDING	EM	11-10-14
STRUCTURAL		
MECHANICAL		
ELECTRICAL		
PLUMBING		
SITE CIVIL		

100% CONSTRUCTION DOCUMENT SET

NORTH SEAL

9-3-14
Jonathan Cardello
Lic. # AR93391

ADD Inc Architecture Interiors Planning

One Biscayne Tower
Suite 1670
Two South
Biscayne Boulevard
Miami, Fl 33131
T. 305.482.8700
F. 305.482.8770
www.addinc.com
Lic. # AA26001507

Boston Miami

JOB NUMBER: 13036.00
CHECKED BY:
ISSUE DATE: FEBRUARY 18, 2014
SCALE: 1/4" = 1'-0"

SHEET TITLE

ENLARGED ROOF PLAN AREA 'A' NORTH

SHEET NUMBER

A114a1

COPYRIGHT ADD INC 2011

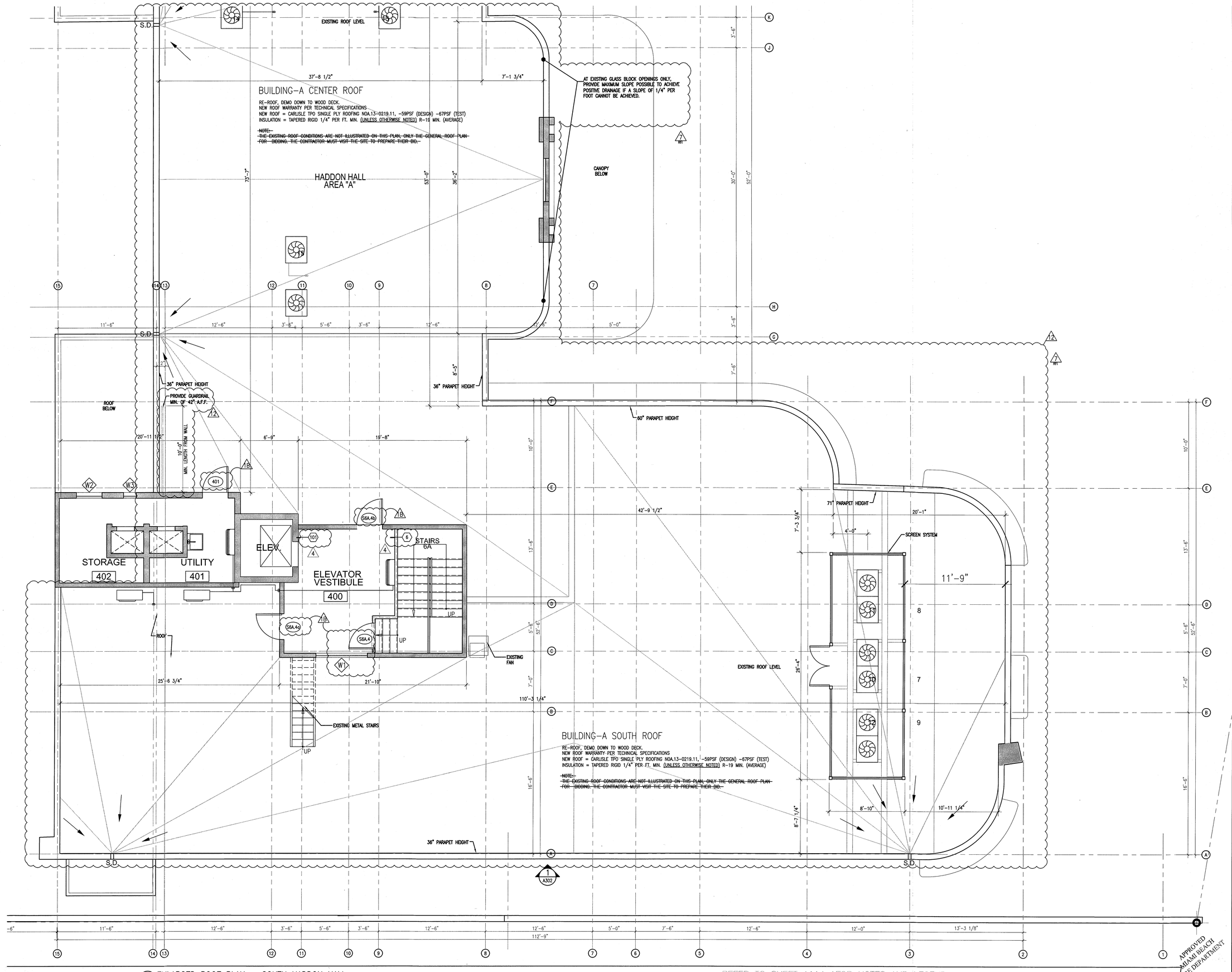

1 ENLARGED ROOF PLAN – SOUTH HADDON HALL
SCALE: 1/4" = 1'-0"

REFER TO SHEET A114a1FOR NOTES AND LEGEND

APPROVED MIAMI BEACH FIRE DEPARTMENT

HADDON HALL
1500 COLLINS AVE
MIAMI BEACH, FL

KEYPLAN N.T.S.

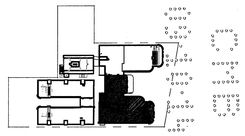

REVISIONS

NO.	DESCRIPTION	ISSUE DATE
1B	DOOR-WINDOW COORD.	03-5-2014
4	FIRE REVIEW COMMENTS	04-01-2014
7 RFI	RFI #7	08-20-2014
12	FIRE & MTCI PERMIT COMMENTS	08-21-2014

MTCI
PRIVATE PROVIDER SERVICES, LLC
Construction Plans Review, Inspections, Testing & Consulting

	REVIEWER INITIALS	DATE REVIEWED
BUILDING	EM	11-10-14
STRUCTURAL		
MECHANICAL		
ELECTRICAL		
PLUMBING		
SITE CIVIL		

100% CONSTRUCTION DOCUMENT SET

NORTH

SEAL

9-3-14
Jonathan Cardello
Lic. # AR93391

ADD Inc Architecture Interiors Planning

One Biscayne Tower
Suite 1670
Two South
Biscayne Boulevard
Miami, Fl 33131
T. 305.482.8700
F. 305.482.8770
www.addinc.com
Lic. # AA26001507

Boston Miami

JOB NUMBER: 13036.00
CHECKED BY:
ISSUE DATE: FEBRUARY 18, 2014
SCALE: 1/4" = 1'-0"

SHEET TITLE

ENLARGED ROOF PLAN SOUTH WING AREA 'A'

SHEET NUMBER

A114a2

COPYRIGHT ADD INC 2011

GENERAL NOTES

1. NOTIFY THE ARCHITECT OF ANY UNEXPECTED FIELD CONDITION OR ANY DISCREPANCY BEFORE PROCEEDING. GENERAL CONTRACTOR IS TO COORDINATE THE COMPLETE SCOPE OF WORK WITH CONSTRUCTION DOCUMENTS.
2. PROVIDE TEMPORARY SECURE ACCESS TO SPACE THROUGH CONSTRUCTION AND TEMPORARY LIGHT & POWER.
3. PROVIDE STRICT CONTROL OF JOB CLEANING AND PREVENT DUST AND DEBRIS FROM EMANATING FROM CONSTRUCTION AREA. GENERAL CONTRACTOR SHALL MAINTAIN THE PREMISES CLEAN AND FREE OF TRASH AND DEBRIS DURING CONSTRUCTION.
4. CAP AND SHUT OFF ALL UNUSED UTILITIES PER CITY AND STATE REQUIREMENTS, WHERE REQUIRED.
5. PROVIDE TEMPORARY FIRE / SAFETY DEVICES THROUGHOUT CONSTRUCTION. SECURE DEVICES AS NECESSARY.
6. PROTECT ALL BASE BUILDING SERVICES, TYPICAL.
7. ALL REQUIREMENTS FOR FIRE RATINGS TO BE MAINTAINED DURING CONSTRUCTION.
8. THIS PROJECT INVOLVES CONSTRUCTION INSIDE AN EXISTING STRUCTURE. CONTRACTORS, BY SUBMITTING A BID, ARE DEEMED TO BE COMPLETELY FAMILIAR WITH THE EXISTING CONDITION OF THE BUILDING AS IT INFLUENCES THE WORK DESCRIBED. ABSOLUTELY NO CLAIMS FOR EXTRA COMPENSATION WILL BE CONSIDERED FOR EXISTING CONDITIONS VISIBLE OR REASONABLY INFERABLE FROM A CAREFUL EXAMINATION OF THE EXISTING BLDG.
9. THE CONTRACTOR SHALL INSPECT THE EXISTING FIELD CONDITIONS AT THE SITE PRIOR TO THE START OF ANY WORK TO DETERMINE WHAT EFFECT THE EXISTING CONDITIONS WILL HAVE ON THEIR WORK. POTENTIAL PROBLEM AREAS SHALL BE BROUGHT TO THE ATTN. OF THE ARCHITECT AND/OR ENGINEER IMMEDIATELY.
10. SHUTDOWN OF EXISTING SYSTEMS FOR CONNECTION TO EXISTING SERVICES SHALL BE COORDINATED WITH THE CONSTRUCTION MANAGER AND BUILDING OWNER. THE CONTRACTOR SHALL SUBMIT REQUESTS, WHERE THEY AFFECT THE OPERATION OF THE BUILDING SYSTEMS, AT LEAST ONE WEEK IN ADVANCE OF ANY REQUIRED SHUTDOWN. THE ACTUAL SHUTDOWN PERIOD SHALL BE AS SHORT AS POSSIBLE AND AT A TIME MUTUALLY AGREEABLE TO THE BUILDING OWNER AND THE CONSTRUCTION MANAGER.
11. ELECTRICAL DEVICES SHALL BE TERMINATED IN A SAFE AND PROPER METHOD BY A LICENSED PROFESSIONAL.
12. ALL WORK SHALL CONFORM WITH ALL APPLICABLE CITY, STATE, AND FEDERAL CODES AND REGULATIONS.
13. ARCHITECT TO REVIEW WALL LAYOUTS PRIOR TO CONSTRUCTION.
14. EXTREME CARE SHALL BE EXERCISED IN CUTTING, DRILLING, ANCHORING, ETC. TO THE EXISTING STRUCTURE. IF ANY DETERIORATION, OR DAMAGE TO THE EXISTING STRUCTURE OCCURS DURING CONSTRUCTION, IT SHALL BE PROMPTLY BROUGHT TO THE ATTENTION OF THE ARCHITECT.
15. REFER TO ENGINEERING DRAWINGS FOR ALL POWER, DATA, MECHANICAL, PLUMBING, & SECURITY REQUIREMENTS, LOCATIONS, AND SPECIFICATIONS. GENERAL CONTRACTOR TO COORDINATE WITH ARCHITECTURAL DOCUMENTS, AND TO NOTIFY ARCHITECT OF ANY DISCREPANCIES / CONFLICTS.
16. REFER TO STRUCTURAL DRAWINGS FOR ALL SLAB THICKNESS VARIANCES, TRANSFER BEAM LOCATIONS, AND OTHER STRUCTURAL SPECIFICATIONS. GENERAL CONTRACTOR TO COORDINATE WITH ARCHITECTURAL DOCUMENTS, AND TO NOTIFY ARCHITECT OF ANY DISCREPANCIES / CONFLICTS.
17. ANY NECESSARY FIRE EXTINGUISHERS ARE TO BE LOCATED IN RECESSED CABINETS WITH DOORS. COORDINATE LOCATIONS WITH ARCHITECT.
18. ALL EXISTING EXPOSED CMU BLOCK / CONCRETE AREAS (WALLS AND FLOORS) TO BE PATCHED, FILLED, AND SKIM COATED WITH NEW ANTI-CRACKING SUBSTRATE, AND SEALED.
19. ALL BATHROOMS AND WET AREAS TO RECEIVE 5/8" DUROCK ON WALLS AND CEILINGS.
20. REFRIGERANT LINE RISERS TO RUN IN CHASE 2 HR RATED (2)1" CHASE FIRESAFED/SMOKESTOPPING AT FLOOR PENETRATIONS.

1

SHEET NOTES

A. WALL MOUNTED TOILET TO AVOID CONFLICTS WITH RATED SPACES BELOW
B. TRASH ROOM TO BE AIR CONDITIONED
C. LIFT UNDER SEPARATE PERMIT
D. ALL INTERIOR FINISHES TO COMPLY WITH FBC CHAPTER 8. SEE G-012, SECTION F FOR DETAILS.
E. ALL WOOD USED THROUGHOUT SHALL BE INHERENTLY FIRE RETARDANT
F. ALL GUEST ROOM ENTRY DOORS AND CORRIDOR DOORS TO BE 1 HOUR RATED

LEGEND

EXISTING PARTITION TO REMAIN
NEW PARTITION
NEW CMU PARTITION
N.L.C. SHADING
EXISTING STRUCTURE
GWB CEILING/SOFFIT
EXISTING DOOR TO REMAIN
DOOR NUMBER
NEW DOOR
ELEVATION REFERENCE
DETAIL REFERENCE
HOSE BIB
F.S. FLOOR SINK
FD.-FLOOR DRAIN
W.-WASTE OUTLET
TD - TRENCH DRAIN
LEVEL CHANGE

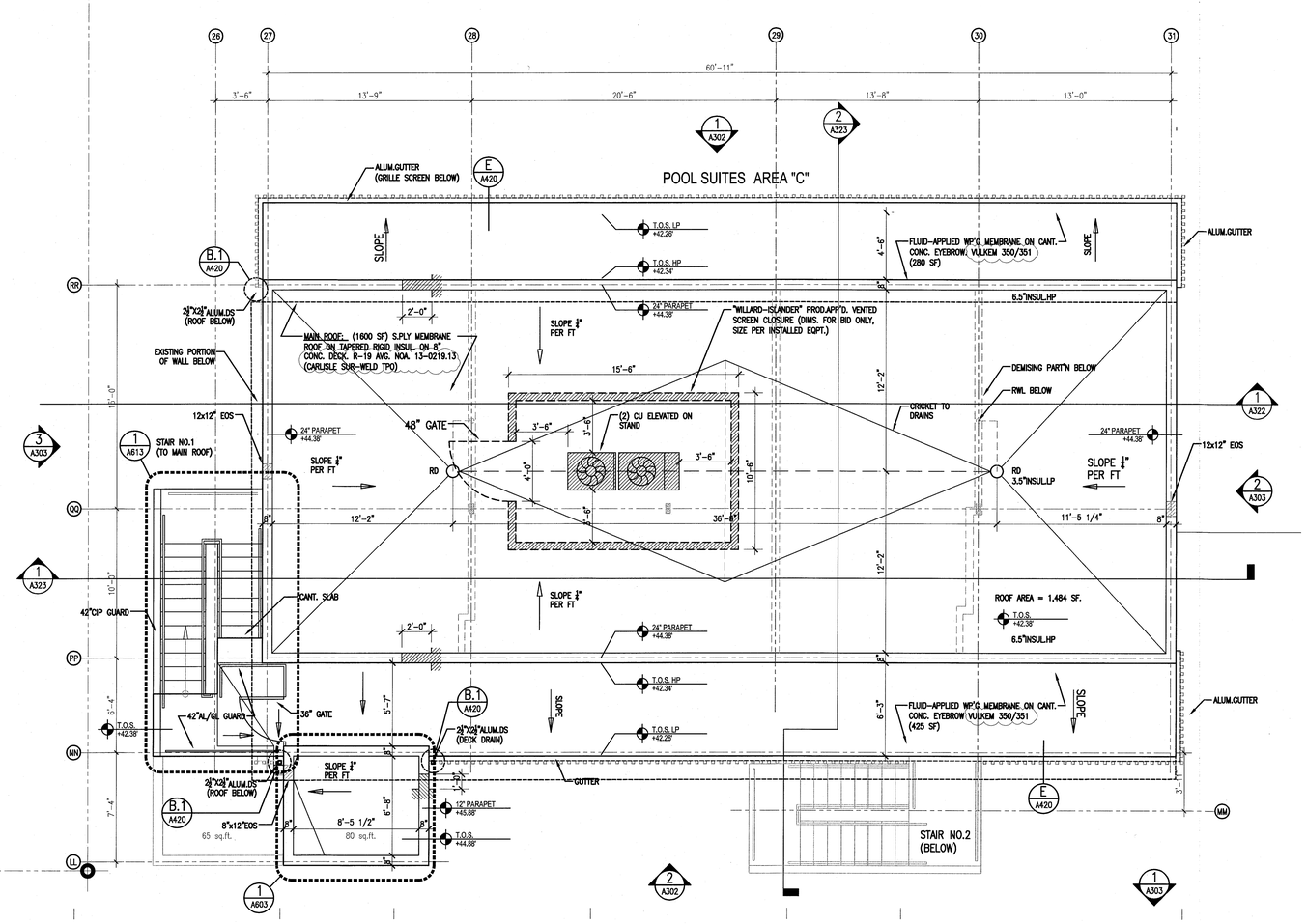

1 ENLARGED ROOF PLAN – AREA 'C'
SCALE: 1/4" = 1'-0"

HADDON HALL
1500 COLLINS AVE
MIAMI BEACH, FL

KEYPLAN N.T.S.

REVISIONS

NO.	DESCRIPTION	ISSUE DATE
1	PROGRESS TO 100% CD	02-18-2014

MTCY PRIVATE PROVIDER SERVICES, LLC
Construction Plans Review, Inspections, Testing & Consulting

	REVIEWER INITIALS	DATE REVIEWED
BUILDING	EM	11-10-14
STRUCTURAL		
MECHANICAL		
ELECTRICAL		
PLUMBING		
SITE CIVIL		

100% CONSTRUCTION DOCUMENT SET

NORTH SEAL

5-22-14
Jonathan Cardello
Lic. # AR93391

ADD Inc Architecture Interiors Planning

One Biscayne Tower
Suite 1670
Two South
Biscayne Boulevard
Miami, Fl 33131
T. 305.482.8700
F. 305.482.8770
www.addinc.com
Lic. # AA26001507

Boston Miami

JOB NUMBER: 13036.00
CHECKED BY:
ISSUE DATE: FEBRUARY 18, 2014
SCALE: 1/4" = 1'-0"

SHEET TITLE

ENLARGED ROOF PLAN AREA 'C'

SHEET NUMBER

A114c

APPROVED MIAMI BEACH FIRE DEPARTMENT

COPYRIGHT ADD INC 2011

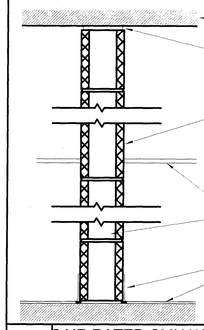

25	2 HR RATED CMU WALL- 6" (U.L. #U906)	45 STC
45	2 HR RATED CMU WALL- 8" (U.L. #U906)	45 STC

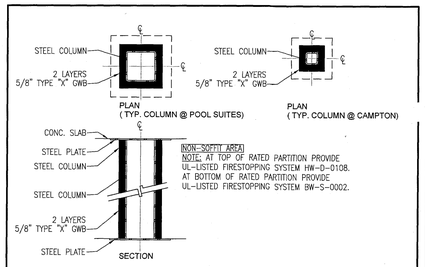

98	1 HOUR FIRE RATED COLUMN WRAP	

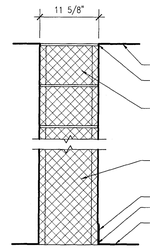

71	2 HR RATED CMU WALL- 12"(UL#U905)	
71A	W/ ACOUSTICAL INSULATION CLOSURE @ DECK	

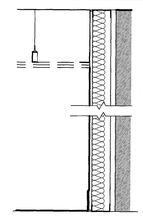

21	SINGLE STUD PARTITION (2 1/2"STUD)	
21A	WITH ACOUSTICAL INSULATION	
22	SING. STUD PARTITION (3 5/8" STUD)	
22A	WITH ACOUSTICAL INSULATION	
23	SING. STUD PARTITION (4" STUD)	
23A	WITH ACOUSTICAL INSULATION	
24	SING. STUD PARTITION (6" STUD)	
24A	WITH ACOUSTICAL INSULATION	

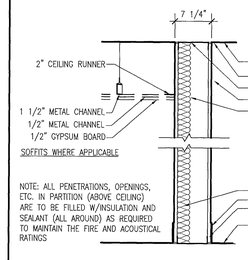

7	SINGLE STUD PARTITION	
7A	W/ ACOUSTICAL INSULATION	
8	1 HOUR RATED (U.L. DESIGN #U465)	
8A	W/ ACOUSTICAL INSUL. & 1HR RATED (U.L. DESIGN #U465)	

TYPICAL PLUMBING PARTITION

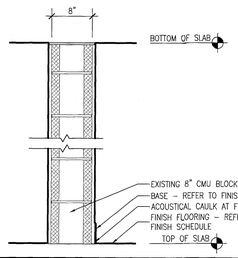

101	EXISTING 8" CMU WALL	
101	1HR - UL #U905	

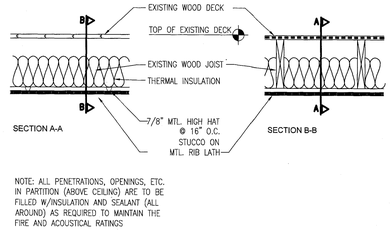

97	2 HOUR FIRE RATED CEILING	
97A	WITH THERMAL INSULATION	

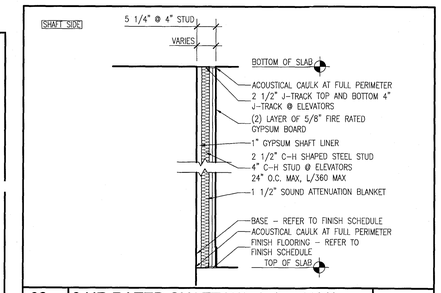

62	2 HR RATED SHAFT WALL (UL#438)	
62A	WITH ACOUSTICAL INSULATION (UL #438)	

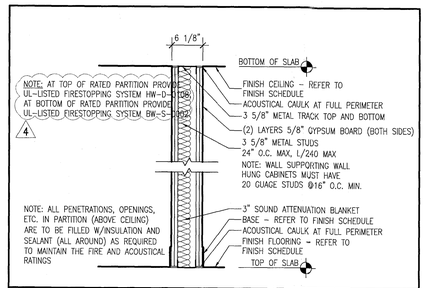

13	SINGLE STUD PARTITION	
13A	W/ ACOUSTICAL INSULATION	
14	2 HR RATED (U.L. DESIGN #U411)	
14A	W/ ACOUSTICAL INSUL. (U.L. DESIGN #U11)	

TYPICAL RATED PLUMBING PARTITION

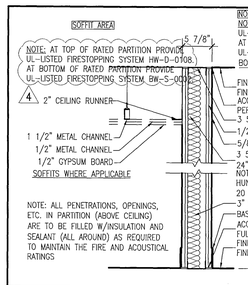

5	SINGLE STUD PARTITION	
5A	W/ ACOUSTICAL INSULATION	
6	1 HR RATED (U.L. DESIGN #U419)	
6A	W/ ACOUSTICAL INSUL. & 1HR RATED (U.L. DESIGN #U419)	

TYPICAL DEMISING WALL

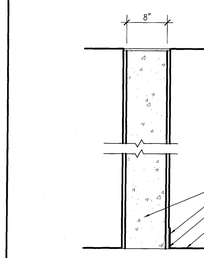

100	EXISTING 8" CONCRETE WALL	
100	FBC TABLE 720.1(2)4-1.1 MIN. THICKNESS 2.5"	

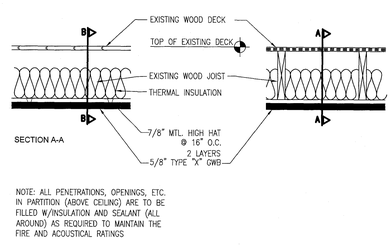

96	2 HOUR FIRE RATED CEILING	
96A	WITH THERMAL INSULATION	

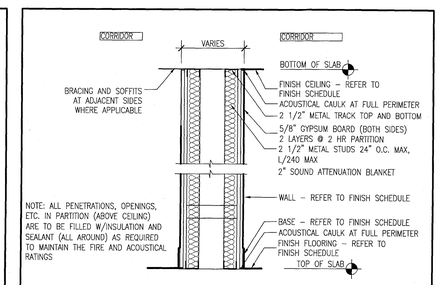

43	DOUBLE STUD PARTITION	
43A	W/ ACOUSTICAL INSULATION	
44	2 HR RATED CHASE (U.L.#U420)	
44A	W/ ACOUSTICAL INSUL. (U.L. DESIGN #U420)	

TYPICAL @ POOL SUITES

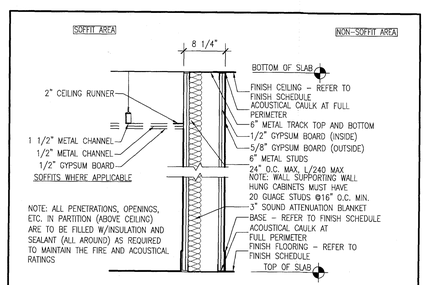

11	SINGLE STUD PARTITION	
11A	W/ ACOUSTICAL INSULATION	

TYPICAL NON-RATED PLUMBING PARTITION

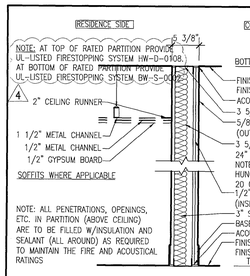

3	SINGLE STUD PARTITION	
3A	W/ ACOUSTICAL INSULATION	
4	1 HOUR RATED (OSU #3240)	
4A	W/ ACOUSTICAL INSULATION & 1HR RATED (OSU #3240)	

TYPICAL CORRIDOR WALL

PROVIDE DENSSHIELD OR SIMILAR MOISTURE RESISTANT BOARD WHEN APPLIED AT WET LOCATION

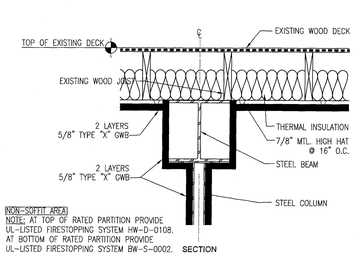

98	2 HOUR FIRE RATED STL. BEAM WRAP	

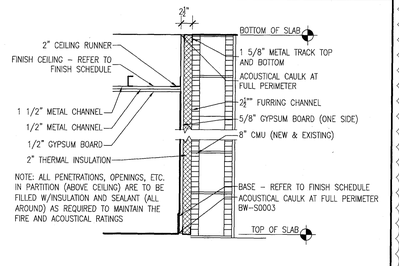

95	2 HR-RATED ONE SIDED FURRING	
95A	WITH THERMAL INSULATION	

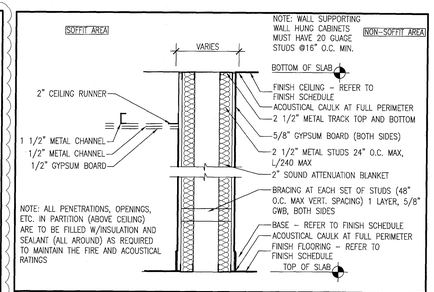

41	DOUBLE STUD PARTITION / CHASE	
41A	W/ ACOUSTICAL INSULATION	
42	1 HR RATED CHASE (U.L.#U420)	
42A	W/ ACOUSTICAL INSUL. & 1HR RATED (U.L. DESIGN #U420)	

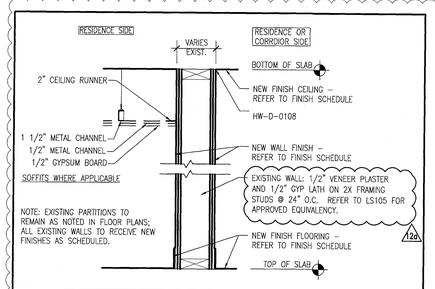

9	EXISTING PARTITION	
	1/2 HR PARTITION - REFER TO LS105 FOR APPROVED EQUIVALENCY	

TYPICAL PARTITION (EXISTING)

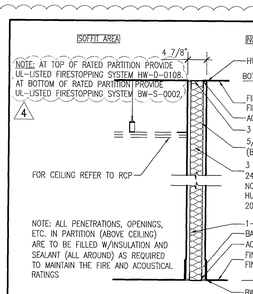

1	SINGLE STUD PARTITION	
1A	W/ ACOUSTICAL INSULATION	
2	1 HOUR RATED (U.L. DESIGN #U465)	
2A	W/ ACOUSTICAL INSUL. & 1HR RATED (U.L. DESIGN #U465)	

TYPICAL INTERIOR UNIT PARTITION

PROVIDE DENSSHIELD OR SIMILAR MOISTURE RESISTANT BOARD WHEN APPLIED AT WET LOCATION

APPROVED MIAMI BEACH FIRE DEPARTMENT

HADDON HALL
1500 COLLINS AVE
MIAMI BEACH, FL

KEYPLAN N.T.S.

REVISIONS

NO.	DESCRIPTION	ISSUE DATE
4	FIRE REVIEW COMMENTS	04-01-2014
12	FIRE & MTCI PERMIT COMMENTS	08-21-2014
12a	FIRE PERMIT COMMENTS	09-29-2014

MTCI PRIVATE PROVIDER SERVICES, LLC
Specialists Plans Review, Inspections, Testing & Consulting

	REVIEWER INITIALS	DATE REVIEWED
BUILDING	EM	11-10-14
STRUCTURAL		
MECHANICAL		
ELECTRICAL		
PLUMBING		
SITE CIVIL		

100% CONSTRUCTION DOCUMENT SET

SEAL

10-9-14
Jonathan Cardello
Lic. # AR93391

ADD Inc Architecture Interiors Planning

One Biscayne Tower
Suite 1670
Two South
Biscayne Boulevard
Miami, Fl 33131
T. 305.482.8700
F. 305.482.8770
www.addinc.com
Lic. # AA26001507

Boston Miami

JOB NUMBER: 13036.00
CHECKED BY:
ISSUE DATE: FEBRUARY 18, 2014
SCALE: REFER TO SHEET

SHEET TITLE

PARTITION TYPES

SHEET NUMBER

A181

COPYRIGHT ADD INC 2011

COLUMNS, NONCOMBUSTIBLE

GA FILE NO. CM 1851	GENERIC	1 HOUR FIRE

GYPSUM WALLBOARD, STEEL STUDS

layer 5/8" type X gypsum wallboard applied without horizontal joints and parallel to 1 5/8" studs located at each corner of TS8x8x0.250 tube steel column with 1" Type S drywall screws 24" o.c. Steel cornerbead, 1 1/2" flanges, applied with 1" Type S drywall screws 12" o.c in each flange. Joint compound 1/16" thick applied over corner bead.

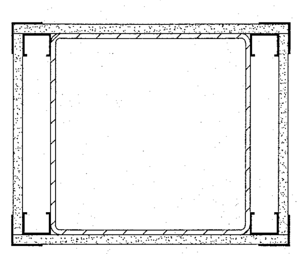

Fire Test: UL NC505, 77NK1747: 6-13-77, UL Design X528

8 FIRE PROTECTION AT STEEL COLUMN
SCALE: N.T.S.

UL SYSTEM NO. W-L-2128

PLASTIC PIPE THROUGH GYSPUM WALL ASSEMBLY

F-RATING = 1-HR. OR 2-HR.
T-RATING = 0-HR.

WL2128f.080106

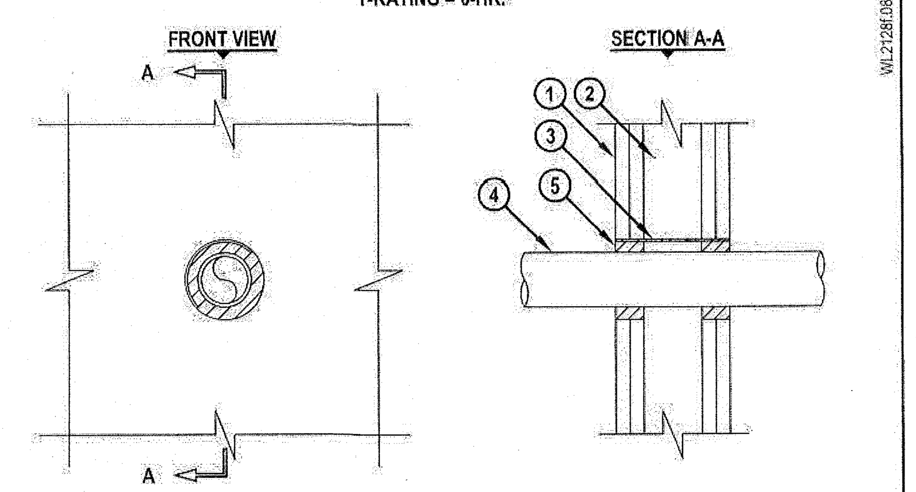

1. GYPSUM WALL ASSEMBLY (UL CLASSIFIED U300 OR U400 SERIES) (1-HR. OR 2-HR. FIRE-RATING) (2-HR. SHOWN).
2. [NOT SHOWN] WOOD STUDS TO CONSIST OF NOMINAL 2" x 4" LUMBER. STEEL STUDS TO BE MINIMUM 2-1/2" WIDE.
3. [OPTIONAL] SHEET METAL PIPE SLEEVE (MAXIMUM 3-1/2" DIAMETER, MINIMUM 28 GA. THICKNESS, WITH MINIMUM 1-1/4" LAP ALONG LONGITUDINAL SEAM).
4. PENETRATING ITEM TO BE ONE OF THE FOLLOWING :
   A. MAXIMUM 2" NOMINAL DIAMETER PVC PLASTIC PIPE (SCHEDULE 40) (CELLULAR OR SOLID CORE) (CLOSED OR VENTED PIPING SYSTEM).
   B. MAXIMUM 2" NOMINAL DIAMETER CPVC PLASTIC PIPE (SDR 13.5) (CLOSED PIPING SYSTEM ONLY).
5. HILTI FS-ONE INTUMESCENT FIRESTOP SEALANT :
   A. MINIMUM 5/8" DEPTH OF SEALANT FOR 1-HR. FIRE-RATING.
   B. MINIMUM 1-1/4" DEPTH OF SEALANT FOR A 2-HR. FIRE-RATING.

NOTES : 1. MAXIMUM DIAMETER OF OPENING = 3-1/2".
2. ANNULAR SPACE = MINIMUM 1/4", MAXIMUM 11/16".
3. PIPE MAY BE INSTALLED AT AN ANGLE NOT GREATER THAN 45° FROM PERPENDICULAR.

Hilti Firestop Systems	HILTI, Inc. Tulsa, Oklahoma USA (800) 879-8000	Sheet 1 of 1; Scale 3/16" = 1"; Date Aug. 01, 2006	Drawing No. WL 2128f

Saving Lives through Innovation and Education

7 FIRE PREVENTION AT GYPSUM WALL ASSEMBLY
SCALE: N.T.S.

UL SYSTEM NO. W-L-2377 FGG/BM/CZ SYSTEM COMPATIBLE

FLOWGUARD GOLD OR BLAZEMASTER PIPE THROUGH GYPSUM WALL ASSEMBLY

F-RATING = 1-HR. OR 2-HR.
T-RATING = 1-HR. OR 2-HR.
L-RATING AT AMBIENT = LESS THAN 1 CFM/SQ. FT.
L-RATING AT 400°F = 4 CFM/SQ. FT.

WL2377e.021109

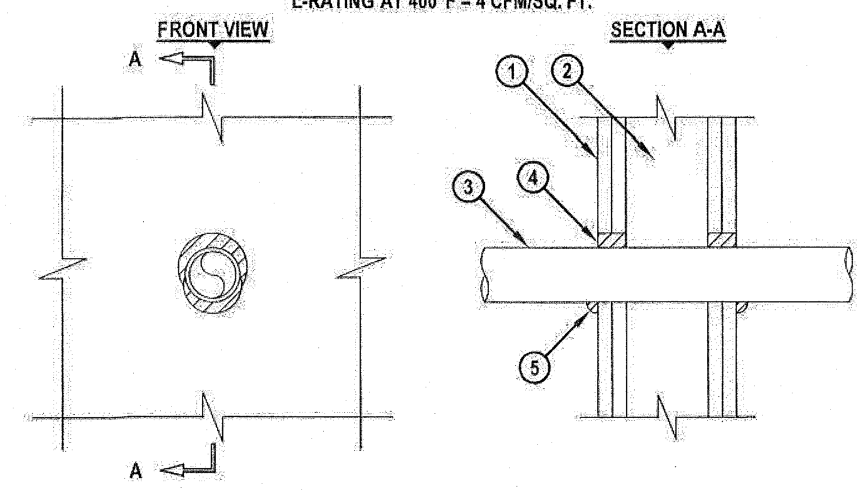

1. GYPSUM WALL ASSEMBLY (UL CLASSIFIED U300 OR U400 SERIES) (1-HR. OR 2-HR. FIRE- RATING) (2-HR. SHOWN).
2. [NOT SHOWN] WOOD STUDS TO CONSIST OF NOMINAL 2" x 4" LUMBER. STEEL STUDS TO BE MINIMUM 2-1/2" WIDE.
3. PENETRATING ITEM TO BE ONE OF THE FOLLOWING (CLOSED PIPING SYSTEM ONLY) :
   A. MAXIMUM 2" NOMINAL DIAMETER FLOWGUARD GOLD® CPVC PIPE (SDR 11).
   B. MAXIMUM 2" NOMINAL DIAMETER BLAZEMASTER® CPVC PIPE (SDR 13.5).
4. HILTI FS-ONE INTUMESCENT FIRESTOP SEALANT :
   A. MINIMUM 5/8" DEPTH OF SEALANT FOR A 1-HR. FIRE-RATING.
   B. MINIMUM 1-1/4" DEPTH OF SEALANT FOR A 2-HR. FIRE-RATING.
5. MINIMUM 1/2" BEAD HILTI FS-ONE INTUMESCENT FIRESTOP SEALANT AT POINT OF CONTACT.

NOTES : 1. MAXIMUM DIAMETER OF OPENING = 3".
2. ANNULAR SPACE = MINIMUM 0", MAXIMUM 1-1/4".

FGG/BM/CZ™ System Compatible indicates that this product has been tested, and is monitored on an ongoing basis, to assure its chemical compatibility with FlowGuard Gold®, BlazeMaster® and Corzan® pipe and fittings. FGG/BM/CZ™, FlowGuard Gold®, BlazeMaster®, and Corzan® are licensed trademarks of the Lubrizol Corporation.

Hilti Firestop Systems	HILTI, Inc. Tulsa, Oklahoma USA (800) 879-8000	Sheet 1 of 1; Scale 3/16" = 1"; Date Feb. 11, 2009	Drawing No. WL 2377e

Saving Lives through Innovation and Education

6 FIRE PREVENTION AT GYPSUM WALL ASSEMBLY
SCALE: N.T.S.

UL SYSTEM NO. W-L-2466

MULTIPLE PLASTIC PIPE THROUGH GYPSUM WALL ASSEMBLY

F-RATING = 1-HR. OR 2-HR.
T-RATING = 0-HR. OR 1-HR.

WL2466a.042706

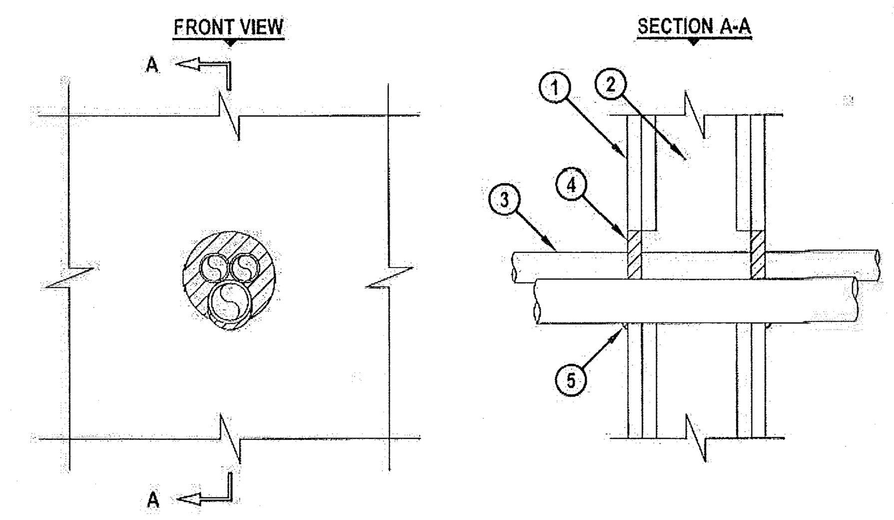

1. GYPSUM WALL ASSEMBLY (UL CLASSIFIED U300, U400 OR V400 SERIES) (1-HR. OR 2-HR. FIRE-RATING) (2-HR. SHOWN).
2. [NOT SHOWN] WOOD STUDS TO CONSIST OF NOMINAL 2" X 4" LUMBER. STEEL STUDS TO BE MINIMUM 3-1/2" WIDE.
3. PENETRATING ITEMS TO BE ONE OR MORE OF THE FOLLOWING :
   A. MAXIMUM 1-1/2" NOMINAL DIAMETER PVC PLASTIC PIPE (CELLULAR OR SOLID CORE) (CLOSED PIPING SYSTEM).
   B. MAXIMUM 1-1/2" NOMINAL DIAMETER CPVC PLASTIC PIPE (CLOSED PIPING SYSTEM).
   C. MAXIMUM 1-1/2" NOMINAL DIAMETER RIGID NONMETALLIC CONDUIT (RNC).
   D. MAXIMUM 1" NOMINAL DIAMETER CROSS-LINKED POLYETHYLENE (PEX) TUBING (CLOSED PIPING SYSTEM).
4. MINIMUM 5/8" DEPTH HILTI FS-ONE INTUMESCENT FIRESTOP SEALANT.
5. MINIMUM 1/4" BEAD HILTI FS-ONE INTUMESCENT FIRESTOP SEALANT APPLIED AT POINT OF CONTACT.

NOTES : 1. MAXIMUM DIAMETER OF OPENING = 4".
2. ANNULAR SPACE = MINIMUM 0", MAXIMUM 1".
3. PVC, RNC = SCHEDULE 40; CPVC = SDR 13.5; PEX = SDR 9.

Hilti Firestop Systems	HILTI, Inc. Tulsa, Oklahoma USA (918) 252-6000	Sheet 1 of 1; Scale 3/16" = 1"; Date Apr. 27, 2006	Drawing No. WL 2466a

Saving Lives through Innovation and Education

5 FIRE PREVENTION AT GYPSUM WALL ASSEMBLY
SCALE: N.T.S.

UL/cUL SYSTEM NO. W-L-1054

METAL PIPE THROUGH 1-HR. OR 2-HR. GYPSUM WALL ASSEMBLY

F-RATING = 1-HR. OR 2-HR.
T-RATING = 0-HR.
L-RATING AT AMBIENT = LESS THAN 1 CFM/SQ. FT.
L-RATING AT 400°F = 4 CFM/SQ. FT.

WL1054q.110602

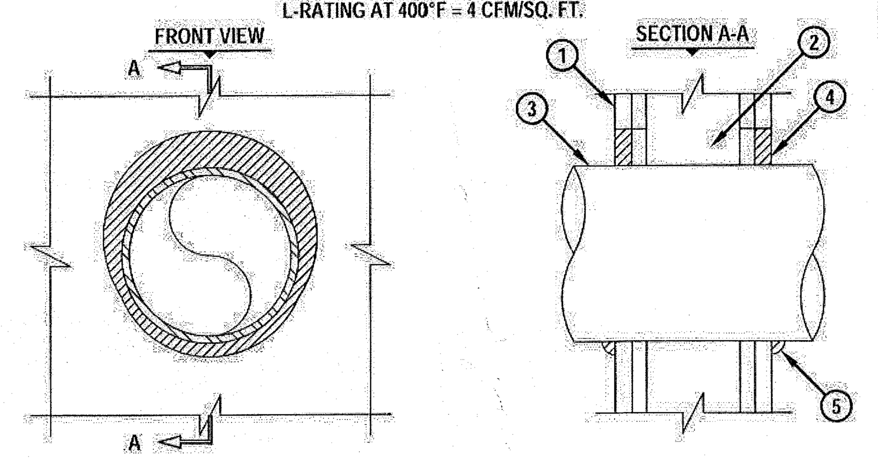

1. GYPSUM WALL ASSEMBLY (UL/ULC CLASSIFIED U300 OR U400 SERIES) (1-HR. OR 2-HR. FIRE-RATING) (2-HR. SHOWN).
2. (NOT SHOWN). WOOD STUDS TO CONSIST OF NOMINAL 2" x 4" LUMBER. STEEL STUDS TO BE MINIMUM 2-1/2" WIDE.
3. PENETRATING ITEM TO BE ONE OF THE FOLLOWING :
   A. MAXIMUM 30" DIAMETER STEEL PIPE (SCHEDULE 10 OR HEAVIER).
   B. MAXIMUM 30" DIAMETER CAST IRON PIPE.
   C. MAXIMUM 6" NOMINAL DIAMETER COPPER PIPE.
   D. MAXIMUM 6" NOMINAL DIAMETER STEEL CONDUIT.
   E. MAXIMUM 4" NOMINAL DIAMETER EMT.
4. MINIMUM 5/8" DEPTH HILTI FS-ONE INTUMESCENT FIRESTOP SEALANT.
5. MINIMUM 1/2" BEAD HILTI FS-ONE INTUMESCENT FIRESTOP SEALANT AT POINT OF CONTACT.

NOTES : 1. MAXIMUM DIAMETER OF OPENING :
A. 32-1/4" FOR STEEL STUD WALLS.
B. 14-1/2" FOR WOOD STUD WALLS.
2. ANNULAR SPACE = MINIMUM 0", MAXIMUM 2-1/4".
3. PIPE MAY BE INSTALLED WITH CONTINUOUS POINT OF CONTACT.
4. PIPE MAY BE INSTALLED AT AN ANGLE NOT GREATER THAN 45° FROM PERPENDICULAR.

HILTI® FIRESTOP SYSTEMS	HILTI, Inc. Tulsa, Oklahoma USA (918) 252-6000	Sheet 1 of 1; Scale 7/32" = 1"; Date Nov. 6, 2002	Drawing No. WL 1054q

Saving Lives through Innovation and Education

4 FIRE PREVENTION AT GYPSUM WALL ASSEMBLY
SCALE: N.T.S.

UL/cUL SYSTEM NO. WL1095

METAL PIPE THROUGH 1-HR. OR 2-HR. GYPSUM WALL

F RATING = 1-HR. OR 2-HR.
T RATING = 1-HR. OR 2-HR.
L RATING AT AMBIENT = LESS THAN 1 CFM/SQ. FT.
L RATING AT 400° F = 4 CFM/SQ. FT.

WL1095d.091699

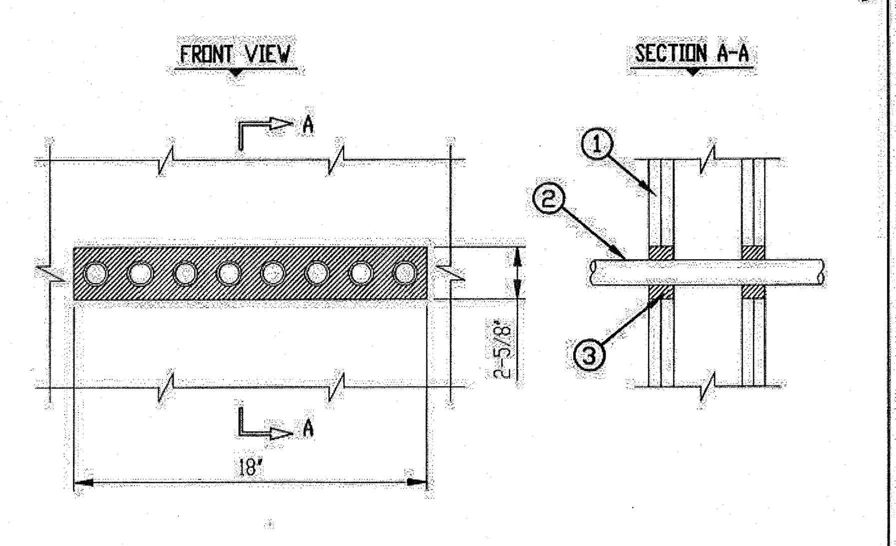

1. GYPSUM WALL ASSEMBLY (UL/ULC CLASSIFIED U300 OR U400 SERIES) (1-HR. OR 2-HR. FIRE-RATING) (2-HR. SHOWN).
2. ONE OR MORE 1" NOMINAL DIAMETER EMT.
3. HILTI FS-ONE INTUMESCENT FIRESTOP SEALANT:
   A. MINIMUM 5/8" DEPTH, FOR A 1-HR. FIRE-RATING.
   B. MINIMUM 1-1/4" DEPTH, FOR A 2-HR. FIRE-RATING.

NOTE : ANNULAR SPACE = MINIMUM 1/2", MAXIMUM 1".

HILTI® FIRESTOP SYSTEMS	HILTI, Inc. Tulsa, Oklahoma USA (918) 252-6000	Sheet 1 of 1; Scale 5/32" = 1"; Date SEPT. 16, 1999	Drawing No. WL 1095d

3 FIRE PREVENTION AT GYPSUM WALL ASSEMBLY
SCALE: N.T.S.

UL/cUL SYSTEM NO. W-L-1410

METAL PIPE THROUGH GYPSUM WALL ASSEMBLY

F-RATING = 1-HR. OR 2-HR.
T-RATING = 0-HR.

WL1410b.032112

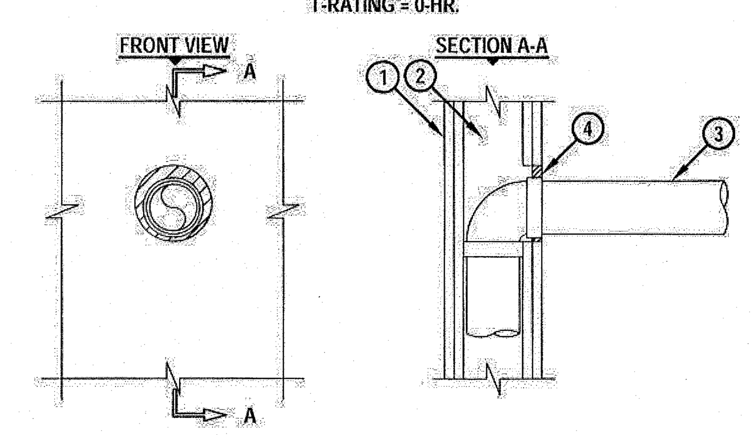

1. GYPSUM WALL ASSEMBLY (UL/cUL CLASSIFIED U300, U400, V400, OR W400 SERIES) (1-HR. OR 2-HR. FIRE-RATING) (2-HR. SHOWN).
2. [NOT SHOWN] WOOD STUDS TO CONSIST OF NOMINAL 2" x 4" LUMBER (SPACED 16" O/C). STEEL STUDS TO BE MINIMUM 3-1/2" WIDE (SPACED 24" O/C).
3. PENETRATING ITEM TO BE ONE OF THE FOLLOWING :
   A. MAXIMUM 3" NOMINAL DIAMETER STEEL PIPE (SCHEDULE 5 OR HEAVIER).
   B. MAXIMUM 3" NOMINAL DIAMETER STEEL CONDUIT OR EMT.
   C. MAXIMUM 1" NOMINAL DIAMETER COPPER TUBING.
   D. MAXIMUM 1" NOMINAL DIAMETER FLEXIBLE STEEL CONDUIT.
4. MINIMUM 5/8" DEPTH HILTI FS-ONE INTUMESCENT FIRESTOP SEALANT, HILTI CP 606 FLEXIBLE FIRESTOP SEALANT, HILTI CP 601S ELASTOMERIC FIRESTOP SEALANT OR HILTI CP 618 FIRESTOP PUTTY STICK.

NOTES : 1. MAXIMUM DIAMETER OF OPENING = 5".
2. ANNULAR SPACE = MINIMUM 0", MAXIMUM 1".
3. [NOT SHOWN] WHEN ANNULAR SPACE IS 0", APPLY MINIMUM 1/2" BEAD HILTI SEALANT OR PUTTY AT POINT OF CONTACT.

Hilti Firestop Systems	HILTI, Inc. Tulsa, Oklahoma USA (800) 879-8000	Sheet 1 of 1; Scale 1/8" = 1"; Date Mar. 21, 2012	Drawing No. WL 1410b

Saving Lives through Innovation and Education

2 FIRE PREVENTION AT GYPSUM WALL ASSEMBLY
SCALE: N.T.S.

UL/cUL SYSTEM NO. W-L-1243

FLEXIBLE ALUMINUM CONDUIT THROUGH GYPSUM WALL ASSEMBLY

F-RATING = 1-HR. OR 2-HR.
T-RATING = 0-HR.
L-RATING AT AMBIENT = 5 CFM/SQ. FT.
L-RATING AT 400°F = 1 CFM/SQ. FT.

WL1243d.062211

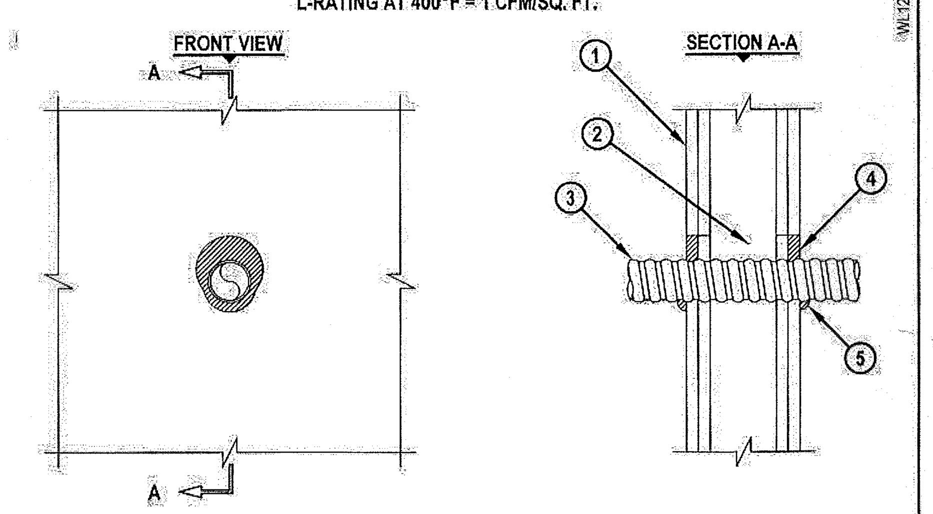

1. GYPSUM WALL ASSEMBLY (UL/cUL CLASSIFIED U300 OR U400 SERIES) (1-HR. OR 2-HR. FIRE-RATING) (2-HR. SHOWN).
2. [NOT SHOWN] WOOD STUDS TO CONSIST OF NOMINAL 2" x 4" LUMBER. STEEL STUDS TO BE MINIMUM 2-1/2" WIDE.
3. PENETRATING ITEM TO BE ONE OF THE FOLLOWING :
   A. MAXIMUM 2" NOMINAL DIAMETER FLEXIBLE ALUMINUM OR STEEL CONDUIT.
   B. MAXIMUM 2" NOMINAL DIAMETER FLEXIBLE STEEL GAS PIPING MANUFACTURED BY OMEGA FLEX INC.
   C. MAXIMUM 1" NOMINAL DIAMETER FLEXIBLE STEEL GAS PIPING MANUFACTURED BY GASTITE, DIVISION OF TITEFLEX OR WARD MFG. LLC.
4. MINIMUM 5/8" DEPTH HILTI FS-ONE INTUMESCENT FIRESTOP SEALANT.
5. MINIMUM 1/2" BEAD HILTI FS-ONE INTUMESCENT FIRESTOP SEALANT APPLIED AT POINT OF CONTACT.

NOTES : 1. MAXIMUM DIAMETER OF OPENING = 3-1/2".
2. ANNULAR SPACE = MINIMUM 0", MAXIMUM 1".

Hilti Firestop Systems	HILTI, Inc. Tulsa, Oklahoma USA (800) 879-8000	Sheet 1 of 1; Scale 5/32" = 1"; Date June 22, 2011	Drawing No. WL 1243d

Saving Lives through Innovation and Education

1 FIRE PREVENTION AT GYPSUM WALL ASSEMBLY
SCALE: N.T.S.

APPROVED MIAMI BEACH FIRE DEPARTMENT

HADDON HALL
1500 COLLINS AVE
MIAMI BEACH, FL

KEYPLAN N.T.S.

REVISIONS

NO.	DESCRIPTION	ISSUE DATE
10	MASTER PERMIT COMMENTS	07-03-2014

MTCI PRIVATE PROVIDER SERVICES, LLC
Construction Plans Review, Inspections, Testing & Consulting

	REVIEWER INITIALS	DATE REVIEWED
BUILDING	EM	11-10-14
STRUCTURAL		
MECHANICAL		
ELECTRICAL		
PLUMBING		
SITE CIVIL		

100% CONSTRUCTION DOCUMENT SET

NORTH SEAL

8-4-14
Jonathan Cardello
Lic. # AR93391

ADD Inc Architecture Interiors Planning

One Biscayne Tower
Suite 1670
Two South
Biscayne Boulevard
Miami, Fl 33131
T. 305.482.8700
F. 305.482.8770
www.addinc.com
Lic. # AA26001507
Boston Miami

JOB NUMBER: 13036.00
CHECKED BY:
ISSUE DATE: FEBRUARY 18, 2014
SCALE: AS NOTED

SHEET TITLE

UL ASSEMBLIES

SHEET NUMBER

A182

10 NEW SHEET

COPYRIGHT ADD INC 2011

SCHEDULES OF UL-2079 (DYNAMIC) JOINT FIRESTOP SYSTEMS

JOINT TYPE	ASSEMBLY RATING	UL-CLASSIFIED SYSTEM: JOINT WIDTH LESS THAN OR EQUAL TO 2"	UL-CLASSIFIED SYSTEM: JOINT WIDTH GREATER THAN 2", LESS THAN OR EQUAL TO 6" 4
CONCRETE FLOOR-TO-FLOOR	1	FF-D-1012, FF-D-1013¹	FF-D-1012, FF-D-1013
	2	FF-D-1012, FF-D-1013¹	FF-D-1012, FF-D-1013
	3	FF-D-1011, FF-D-1026¹	FF-D-1011, FF-D-1026
	4	FF-D-1047	N/A**
EDGE OF CONCRETE FLOOR SLAB-TO-WALL	1	FW-D-1011, FW-D-1012, FW-D-1013, FW-D-1021¹	FW-D-1011, FW-D-1012, FW-D-1013, FW-D-1021
	2	FW-D-1011, FW-D-1012, FW-D-1013, FW-D-1021¹	FW-D-1011, FW-D-1012, FW-D-1013, FW-D-1021
	3	FW-D-1011, FW-D-1021¹	FW-D-1011, FW-D-1021
	4	FW-D-1047	N/A**
CONCRETE OR BLOCK WALL TO FLAT CONCRETE SLAB FLOOR (TOP-OF-WALL)	1	HW-D-0097¹, HWD 0268	HW-D-1008, HW-D-1009
	2	HW-D-0097¹, HWD 0268	HW-D-1008, HW-D-1009
	3	HW-D-1008¹, HWD 0268	HW-D-1008
	4	HWD 0261	N/A**
CONCRETE OR BLOCK WALL TO CONCRETE OVER FLUTED METAL DECK (TOP-OF-WALL)	1	HW-D-0080, HW-D-0081, HW-D-0098	HW-D-1037
	2	HW-D-0080, HW-D-0081, HW-D-0098	HW-D-1037
	3	HW-D-0294	N/A**
	4	HW-D-0294	N/A**
GYPSUM WALL TO FLAT CONCRETE SLAB FLOOR (TOP-OF-WALL)	1	HW-D-0082, HW-D-0083, HW-D-0097, HW-D-0106	N/A**
	2	HW-D-0082, HW-D-0083, HW-D-0097, HW-D-0106	N/A**
	3	HW-D-1008¹	N/A**
GYPSUM SHAFT WALL TO FLAT CONCRETE SLAB (TOP-OF-WALL)	2	HW-D-0342	N/A**
GYPSUM WALL TO CONCRETE OVER FLUTED METAL DECK (TOP-OF-WALL)	1	HW-D-0042*, HW-D-0049*, HW-D-0087*, HW-D-0089*, HW-D-0045, HW-D-0046*, HW-D-0076*, HW-D-0077*	N/A**
	2	HW-D-0042*, HW-D-0049*, HW-D-0087*, HW-D-0089*, HW-D-0045, HW-D-0046*, HW-D-0076*, HW-D-0077*	N/A**
	3	HW-D-0292	N/A**
	4	HW-D-0292	N/A**
CONCRETE WALL-TO-WALL	1	WW-D-0017, WW-D-0032	WW-D-1011, WW-D-1012
	2	WW-D-0017, WW-D-0032	WW-D-1011, WW-D-1012
	3	WW-D-1011¹	WW-D-1011
	4	WW-D-1047	N/A**
GYPSUM WALL-TO-CONCRETE WALL	1	WW-D-0040	N/A**
	2	WW-D-0040	N/A**

* SEE NOTE 3
** CONTACT HILTI FOR CURRENT UL-CLASSIFIED SYSTEM OR ENGINEER JUDGMENT DRAWING: 800-879-8000

NOTES:
1. CLASSIFIED SYSTEMS FOR 2" - 6" WIDE JOINTS MAY BE USED FOR JOINTS 2" WIDE AND LESS.
2. CONFIRM THAT MOVEMENT CAPABILITIES OF THE SELECTED UL SYSTEM MEETS OR EXCEEDS THE SPECIFIED MOVEMENT RANGE OF THE PARTICULAR JOINT.
3. SYSTEMS MARKED WITH ASTERIK (*) ARE SUITABLE FOR TOP-OF-WALL JOINTS WHERE THE FLUTED METAL DECK HAS SPRAY-ON MONOKOTE MK-6/HY FIREPROOFING.
4. VERIFY ALLOWABLE JOINT WIDTH ON SPECIFIC UL SYSTEM DRAWING.

01.18.07

7 FIRE PREVENTION JOINT SCHEDULE
SCALE: N.T.S.

UL/cUL SYSTEM NO. W-L-1214
FLEXIBLE STEEL CONDUIT THROUGH GYPSUM WALL ASSEMBLY
F-RATING = 1-HR.
T-RATING = 0-HR.

WL1214a.101700

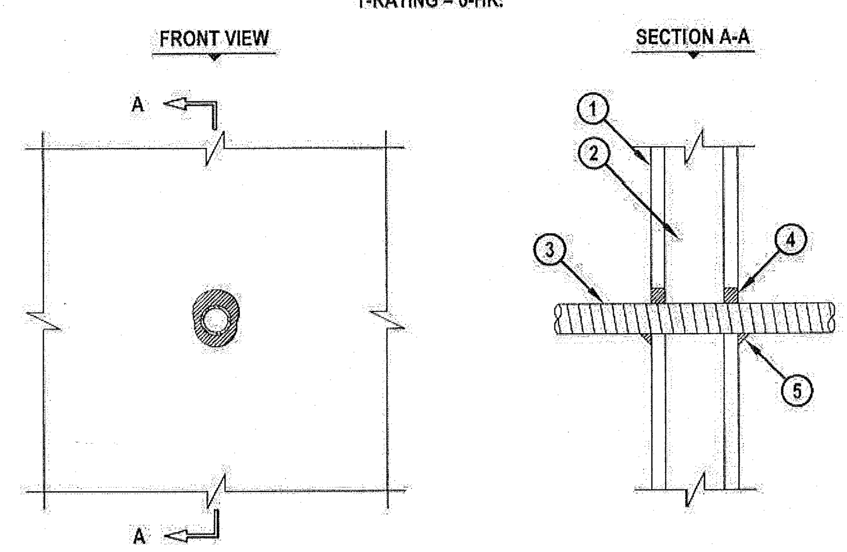

1. GYPSUM WALL ASSEMBLY (UL/cUL CLASSIFIED U300 OR U400 SERIES) (1-HR. FIRE-RATING).
2. (NOT SHOWN). WOOD STUDS TO CONSIST OF 2" x 4" LUMBER. STEEL STUDS TO BE MINIMUM 2-1/2" WIDE.
3. MAXIMUM 1" NOMINAL DIAMETER FLEXIBLE STEEL CONDUIT.
4. MINIMUM 5/8" DEPTH HILTI FS-ONE HIGH PERFORMANCE INTUMESCENT FIRESTOP SEALANT.
5. MINIMUM 1/2" BEAD HILTI FS-ONE HIGH PERFORMANCE INTUMESCENT FIRESTOP SEALANT AT POINT OF CONTACT.

NOTES : 1. MAXIMUM DIAMETER OF OPENING = 2".
2. ANNULAR SPACE = MINIMUM 0", MAXIMUM 3/4".

HILTI FIRESTOP SYSTEMS | HILTI, Inc. Tulsa, Oklahoma USA (918) 252-6000 | Sheet 1 of 1 | Scale 3/16" = 1" | Date Oct. 17, 2000 | Drawing No. WL 1214a
Saving Lives through Innovation and Education

6 FIRE PREVENTION AT GYPSUM WALL ASSEMBLY
SCALE: N.T.S.

HILTI — Product Information

CP 604
Self-Leveling Firestop Sealant

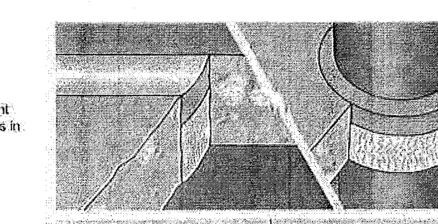

Product description
- Self-leveling, single-component, silicone-based firestop sealant for use with through-penetrations as well as construction joints in floors.

Product features
- Self-leveling–requires no tooling
- Excellent elongation/compression properties
- Meets 500 cycle requirements (ASTM E 1966 and UL 2079)
- Smoke, fumes and water resistant
- Meets Class I W-rating requirements
- Meets LEED™ requirements for indoor environmental quality credit 4.1 Low Emitting Materials, Sealants and Adhesives and 4.2 Paints and Coatings

Areas of application
- Sealing construction/expansion joints
- Metal pipes
- Cable bundles
- Sealing multiple penetrations in small or large openings

For use with
- Concrete floors rated up to 3 hours

Examples
- Penetrations for metal pipes between floor levels
- Construction joints and expansion joints in floors

Technical Data*	CP 604
Chemical basis	Neutral elastic silicone
Color	Gray
Application temperature	40°F to 104°F (5°C to 40°C)
Skin forming time	Approx. 15 min
Curing time	Approx. 2 mm/3 days
Joint movement capability	Approx. 20%
Temperature resistance	-40°F to 248°F (-40°C to 120°C)
Surface burning characteristics (ASTM E 84-00)	Flame Spread: 5 Smoke Development: 60
Sound transmission classification (ASTM E 90-02)	56 (Relates to specific construction)

Approvals
- California State Fire Marshal - No. 4485-1200:117, No. 1452-1200:134
- City of New York - MEA 237-02-M

Tested in accordance with
- UL 1479 • ASTM E 1966 • UL 2079
- ASTM E 814 • ASTM E 2307 • ASTM E 84

*At 73°F (23°C) and 50% relative humidity

FILL, VOID OR CAVITY MATERIAL FOR USE IN THROUGH-PENETRATION FIRESTOP SYSTEMS, JOINT SYSTEMS AND PERIMETER FIRE CONTAINMENT SYSTEMS. SEE UL FIRE RESISTANCE DIRECTORY 697Z

FM APPROVED — FBC

Installation instructions for CP 604

Notice
- Before handling, read Material Safety Data Sheet and product label for safe usage and health information.
- Instructions below are general guidelines — always refer to the applicable drawing in the UL Fire Resistance Directory or Hilti Firestop Systems Guide for complete installation information.

Opening
1. Clean the opening. Surfaces to which CP 604 will be applied should be cleaned of loose debris, dirt, oil, wax and grease. The surface should be moisture and frost free.

Application of firestop
2. Insert fill of mineral wool (or backer as required).
3. Apply firestop over backer.
4. Allow firestop sealant to level. Once cured, CP 604 can only be removed mechanically.
5. For maintenance reasons, a penetration seal could be permanently marked with an identification plate. In such a case, mark the identification plate and fasten it in a visible position next to the seal.

Chemical resistance
- At room temperature the cured silicone sealant is resistant for a short time to diluted (15%) acids and lyes/alkalis as well as commercially available cleaning agents and disinfectants (except those containing iodine).
- Concentrated acids and lyes/alkalis destroy silicone rubber over time.
- Solvents and mineral oils cause cured silicone to swell. Consequently, proper functioning of the sealant should be checked after exposure to a solvent or mineral oil. Please contact your local sales representative or the nearest Hilti Center if special requirements for chemical resistance have to be met.

Not for use
- In areas immersed in water
- Not to be painted

Storage
- Store only in the original packaging in a location protected from moisture at a temperature of 40°F (5°C) to 77°F (25°C)
- Observe expiration date on package

Joint installation: For floor applications. Not to be used in walls.
Through Penetration Installation (Top View): For floor applications. Not to be used in walls.

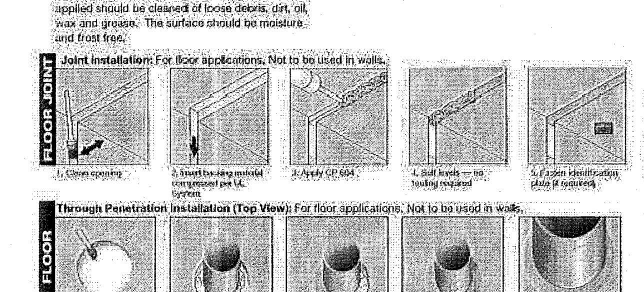

Hilti Firestop — Saving lives through innovation and education

Hilti. Outperform. Outlast.

5 SELF-LEVELING FIRESTOP SEALANT
SCALE: N.T.S.

Product Information — HILTI

CP 606
Flexible Firestop Sealant

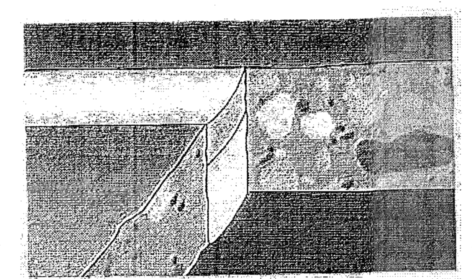

Product description
- An acrylic based firestop sealant that provides movement capability in fire rated joints and seals through-penetrations applications

Product features
- Silicone free
- Halogen, asbestos and solvent free
- Paintable
- Tested up to 33% movement with 500 cycles in accordance to UL 2079 and ASTM 1966
- Smoke and fume resistant
- Easy clean up with water
- Single component systems available
- Meets LEED™ requirements for indoor environmental quality credit 4.1 Low Emitting Materials, Sealants and Adhesives and 4.2 Paints and Coatings

Areas of application
- Sealing construction/expansion joints
- Top-of-wall joints
- Metal pipes
- Cable bundles
- HVAC penetrations

For use with
- Various base materials such as masonry, concrete, gypsum, etc.
- Wall and floor assemblies rated up to 3 hours

Examples
- Where a gypsum wall assembly meets the underside of a metal or concrete deck
- Sealing expansion joints to impede the passage of fire, smoke and toxic fumes
- Sealing around HVAC penetrations through fire-rated assemblies

Technical Data*	CP 606
Chemical basis	Acrylic based firestop sealant
Color	Available in red, white and gray
Application temperature	40°F to 104°F (5°C to 40°C)
Skin-forming time	Approx. 15 min
Curing time	Approx. 3 mm / 3 days
Average volume shrinkage (ASTM C1241)	22.2%
Movement capability	Approx. 10%
Temperature resistance	-22°F to 176°F (-30°C to 80°C)
Surface burning characteristics (ASTM E 84-90)	Flame Spread: 10 Smoke Development: 0
Sound transmission classification (ASTM E 90-90)	56 (Relates to specific construction)

Approvals
- California State Fire Marshal - No. 1462-1200:112, No. 1451-1200:121, No. 4485-1200:132
- City of New York - [illegible]

Tested in accordance with
- UL 2079 • ASTM E 814 • ASTM E 1966
- ASTM E 84 • UL 1479

*At 73°F (23°C) and 50% relative humidity

FILL, VOID OR CAVITY MATERIAL FOR USE IN THROUGH-PENETRATION FIRESTOP SYSTEMS AND JOINT SYSTEMS. SEE UL FIRE RESISTANCE DIRECTORY 697Z

FM APPROVED

Installation instructions for CP 606

Notice
- Before handling, read Material Safety Data Sheet and product label for safe usage and health information.
- Instructions below are general guidelines — always refer to the applicable drawing in the UL Fire Resistance Directory or Hilti Firestop Systems Guide for complete installation information.
- The use of backing material is recommended to control the sealant depth and help ensure assembly seal is complete.

Opening
1. Clean the opening. Surfaces to which CP 606 will be applied should be cleaned of loose debris, dirt, oil, wax and grease. The surface should be moisture and frost free.

Application of firestop
2. Insert fill of mineral wool or backer (as required).
3. Apply firestop over backer.
4. Smooth firestop sealant with a trowel before the skin forms. Once cured, CP 606 can only be removed mechanically.
5. For maintenance reasons, a penetration seal can be permanently marked with an identification plate and fastened in a visible position next to the seal.

Not for use
- On areas immersed in water

Storage
- Store only in the original packaging in a location protected from moisture at a temperature of 40°F to 77°F (5°C to 25°C)
- Observe expiration date on package

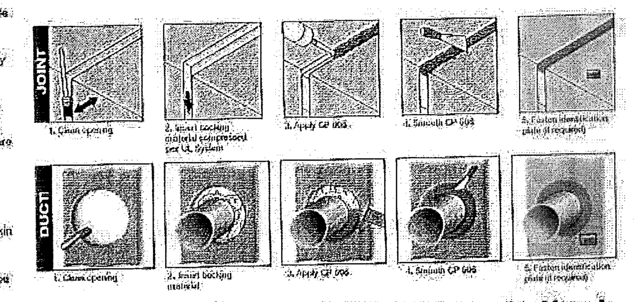

Hilti. Outperform. Outlast.

3 FLEXIBE FIRESTOP SEALANT
SCALE: N.T.S.

Product Information — HILTI

FS-ONE
High Performance Intumescent Firestop Sealant

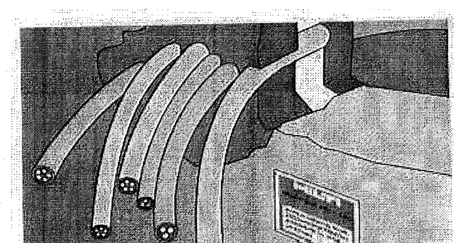

Product description
- Intumescent (expands when exposed to fire) firestop sealant that helps protect combustible and non-combustible penetrations for up to 4 hours fire rating

Product features
- Smoke, gas and water resistant after material has cured
- Contains no halogen, solvents or asbestos
- High fire rating properties
- Water based, easy to clean
- Protects most typical firestop penetration applications
- Paintable
- Single component systems available
- Meets LEED™ requirements for indoor environmental quality credit 4.1 Low Emitting Materials, Sealants and Adhesives and 4.2 Paints and Coatings

Areas of application
- Steel, copper and EMT pipes
- Insulated steel and copper pipes
- Cable bundles
- Closed or vented plastic pipes
- HVAC penetrations

For use with
- Concrete, masonry, drywall and wood floor assemblies
- Wall and floor assemblies rated up to 4 hours

Examples
- Sealing around combustible pipe penetrations in fire rated construction
- Sealing around non-combustible penetrations in fire rated construction

Technical Data*	FS-ONE
Chemical basis	Water-based intumescent acrylic dispersion
Color	Red
Application temperature	40°F to 104°F (5°C to 40°C)
Skin forming time	Approx. 20-30 min.
Curing time	Approx. 2 mm / 3 days
Average volume shrinkage (ASTM C1241)	24.1%
Movement capability	Approx. 5%
Expansion rate (unrestricted)	Up to 3-5 times original volume
Temperature resistance (cured)	-40°F to 212°F (-40°C to 100°C)
Surface burning characteristics (ASTM E 84-96)	Flame Spread: 0 Smoke Development: 5
Sound transmission classification (ASTM E 90-99)	56 (Relates to specific construction)

Approvals
- California State Fire Marshal - No. 4485-1200:106
- City of New York - MEA 326-96-M Vol. IV

Tested in accordance with
- UL 1479 • ASTM E 814 • ASTM E 84

*At 73°F (23°C) and 50% relative humidity

FILL, VOID OR CAVITY MATERIAL FOR USE IN THROUGH-PENETRATION FIRESTOP SYSTEMS. SEE UL FIRE RESISTANCE DIRECTORY 697Z

FM APPROVED — FBC

Installation Instructions for FS-ONE

Notice
- Before handling, read Material Safety Data Sheet and product label for safe usage and health information.
- Instructions below are general guidelines — always refer to the applicable drawing in the UL Fire Resistance Directory or Hilti Firestop Systems Guide for complete installation information.

Opening
1. Clean the opening. Surfaces to which FS-ONE will be applied should be cleaned of loose debris, dirt, oil, moisture, frost and wax. Structures supporting penetrating items must be installed in compliance with local building and electrical standards.

Application of firestop sealant
2. Install the prescribed backfilling material type and depth to obtain the desired rating (if required). Leave sufficient depth for applying FS-ONE.
3. Application of firestop sealant: Apply FS-ONE to the required depth in order to obtain the desired fire rating. Make sure FS-ONE contacts all surfaces to provide maximum adhesion. For application of FS-ONE use a standard caulking gun, foil pack gun, bulk loader and bulk gun. With FS-ONE buckets, Graco type sealant pumps may be used. (contact pump manufacturer for proper selection).
4. Smoothing of firestop sealant: To complete the seal, tool immediately to give a smooth appearance. Excess sealant, prior to curing, can be cleaned away from adjacent surfaces and tools with water.
5. Leave completed seal undisturbed for 48 hours.
6. For maintenance reasons, a penetration seal could be permanently marked with an identification plate. In such a case, mark the identification plate and fasten it in a visible position next to the seal.

Not for use
- High movement expansion joints
- Underwater
- On materials where oil, plasticizers or solvents may bleed i.e. impregnated wood, oil based seals, green or partially vulcanized rubber
- In any penetration other than those specifically described in this manual or the test reports

Storage
- Store only in the original packaging in a location protected from moisture at temperatures between 40°F (5°C) and 86°F (30°C)
- Observe expiration date on the packag.

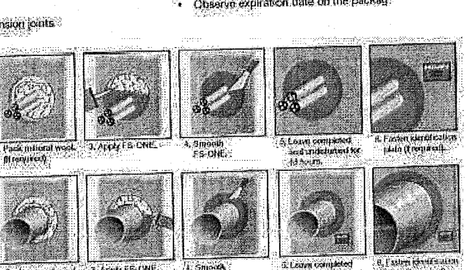

Hilti. Outperform. Outlast.

3 HIGH PERFORMANCE INTMESCENT FIRESTOP SEALANT
SCALE: N.T.S.

UL SYSTEM NO. C-AJ-2110
PLASTIC PIPE THROUGH CONCRETE FLOOR/WALL OR BLOCK WALL
F-RATING = 3-HR.
T-RATING = 0-HR.
W-RATING = CLASS I (SEE NOTES NO. 6 AND 7 BELOW)

CAJ2110m.091807

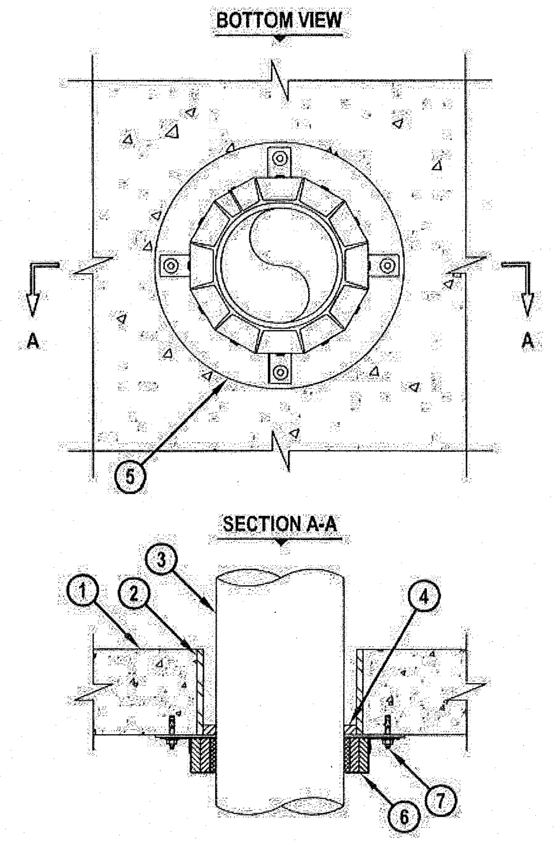

1. CONCRETE FLOOR OR WALL ASSEMBLY (3-HR. FIRE-RATING) :
A. LIGHTWEIGHT OR NORMAL WEIGHT CONCRETE FLOOR OR WALL (MINIMUM 4-1/2" THICK).
B. PRECAST (HOLLOW-CORE) CONCRETE FLOOR (MINIMUM 6" THICK).
C. ANY UL CLASSIFIED CONCRETE BLOCK WALL.

Hilti Firestop Systems | HILTI, Inc. Tulsa, Oklahoma USA (800) 879-8000 | Sheet 1 of 2 | Scale 5/32" = 1" | Date Sep. 18, 2007 | Drawing No. CAJ 2110m
Saving Lives through Innovation and Education

2 FIRE PREVENTION AT CONCRETE FLOOR/WALL OR BLOCK WALL ASSEMBLY
SCALE: N.T.S.

UL SYSTEM NO. C-AJ-2567
PLASTIC PIPE THROUGH CONCRETE FLOOR/WALL OR BLOCK WALL ASSEMBLY
F-RATING = 2-HR.
T-RATING = 0-HR., 1 1/4-HR., OR 2-HR.
L-RATING AT AMBIENT = LESS THAN 1 CFM/SQ FT
L-RATING AT 400°F = 4 CFM/SQ FT
W-RATING = CLASS I (SEE NOTE NO. 7 BELOW)

CAJ2567d.032112

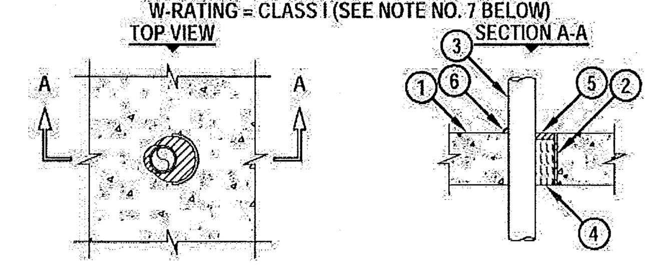

1. CONCRETE FLOOR OR WALL ASSEMBLY (2-HR. FIRE-RATING).
A. LIGHTWEIGHT OR NORMAL WEIGHT CONCRETE FLOOR (MINIMUM 4-1/2" THICK).
B. LIGHTWEIGHT OR NORMAL WEIGHT CONCRETE WALL (MINIMUM 5" THICK).
C. PRECAST (HOLLOW-CORE) CONCRETE FLOOR (MINIMUM 6" THICK).
D. ANY UL CLASSIFIED CONCRETE BLOCK WALL.
2. [OPTIONAL] MAXIMUM 4" NOMINAL DIAMETER STEEL PIPE SLEEVE (SCHEDULE 40 OR HEAVIER) MAY EXTEND MAXIMUM 3" ABOVE FLOOR, OR BOTH SIDES OF WALL.
3. PENETRATING ITEM TO BE ONE OF THE FOLLOWING :
A. MAXIMUM 2" NOMINAL DIAMETER PVC PLASTIC PIPE (CELLULAR OR SOLID CORE).
B. MAXIMUM 2" NOMINAL DIAMETER CPVC PLASTIC PIPE.
C. MAXIMUM 2" NOMINAL DIAMETER RIGID NONMETALLIC CONDUIT (RNC).
D. MAXIMUM 2" NOMINAL DIAMETER CROSS-LINKED POLYETHYLENE (PEX) TUBING (CLOSED PIPING SYSTEM ONLY).
4. MINIMUM 4" THICKNESS MINERAL WOOL (MIN. 4 PCF DENSITY) TIGHTLY PACKED.
5. MINIMUM 1/2" DEPTH HILTI FS-ONE INTUMESCENT FIRESTOP SEALANT.
6. MINIMUM 1/2" BEAD HILTI FS-ONE INTUMESCENT FIRESTOP SEALANT APPLIED AT POINT OF CONTACT.

NOTES : 1. MAXIMUM DIAMETER OF OPENING = 4".
2. ANNULAR SPACE [WITH SLEEVE] = MINIMUM 1/4", MAXIMUM 1-3/8".
3. ANNULAR SPACE [WITHOUT SLEEVE] = MINIMUM 0", MAXIMUM 1-5/8".
4. WHEN HOLLOW-CORE FLOOR ARE USED, MINERAL WOOL MUST BE INSTALLED FLUSH WITH BOTTOM SURFACE OF FLOOR.
5. CLOSED OR VENTED PIPING SYSTEM (PVC, RNC = SCHEDULE 40; CPVC = SDR 17; PEX = SDR 9).
6. MINIMUM 1/2" DEPTH HILTI FS-ONE INTUMESCENT FIRESTOP SEALANT IS REQUIRED ON BOTH SIDES OF A WALL.
7. FOR W-RATING, RECESS FS-ONE 1/4" FROM TOP SURFACE OF FLOOR AND APPLY MINIMUM 1/4" DEPTH HILTI CP 604 SELF LEVELING FIRESTOP SEALANT, FLUSH WITH TOP OF FLOOR. MINIMUM 3/16" ANNULAR SPACE IS REQUIRED TO OBTAIN W-RATING.

Hilti Firestop Systems | HILTI, Inc. Tulsa, Oklahoma USA (800) 879-8000 | Sheet 1 of 1 | Scale 3/32" = 1" | Date Mar. 21, 2012 | Drawing No. CAJ 2567d
Saving Lives through Innovation and Education

1 FIRE PREVENTION AT CONCRETE FLOOR/WALL OR BLOCK WALL ASSEMBLY
SCALE: N.T.S.

APPROVED MIAMI BEACH FIRE DEPARTMENT

HADDON HALL
1500 COLLINS AVE
MIAMI BEACH, FL

KEYPLAN N.T.S.

REVISIONS

NO.	DESCRIPTION	ISSUE DATE
10	MASTER PERMIT COMMENTS	07-03-2014

MTCI PRIVATE PROVIDER SERVICES, LLC
Construction Plans Review, Inspections, Testing & Consulting

	REVIEWER INITIALS	DATE REVIEWED
BUILDING	EM	11-10-14
STRUCTURAL		
MECHANICAL		
ELECTRICAL		
PLUMBING		
SITE CIVIL		

100% CONSTRUCTION DOCUMENT SET

NORTH SEAL

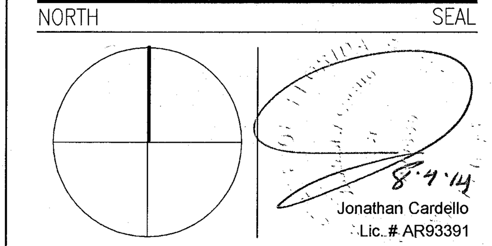

8-4-14
Jonathan Cardello
Lic. # AR93391

ADD Inc Architecture Interiors Planning

One Biscayne Tower
Suite 1670
Two South
Biscayne Boulevard
Miami, Fl 33131
T. 305.482.8700
F. 305.482.8770
www.addinc.com
Lic. # AA26001507

Boston Miami

JOB NUMBER: 13036.00
CHECKED BY:
ISSUE DATE: FEBRUARY 18, 2014
SCALE: AS NOTED

SHEET TITLE
UL ASSEMBLIES

SHEET NUMBER
A183
10 NEW SHEET

COPYRIGHT ADD INC 2011

DOOR SCHEDULE

BASEMENT LEVEL

DOOR NUMBER	LOCATION	DOOR TYPE	DOOR WIDTH	DOOR HEIGHT	DOOR THICK	DOOR MATL	FRAME TYPE	FRAME MATL	FINISH	HEAD	SILL	JAMB	FIRE PROTECT RATING (MIN)	HDWR SET	REMARKS
001	001 (ENTRY)	DF	(2)2'-0"	(6'-8")	1 3/4"	(HM)		(HM)	PAINT	NOA	NOA	NOA	90 MIN.	01	12-0305.14 PAINT MATCH EXTERIOR
001A	001A (FPL VAULT)	(DF)	(2)2'-6"	6'-8"		HM		HM	PAINT	NOA	NOA	NOA		40	12-0305.14 PER FPL SPECS
002	002 (TRASH)	DF	(2)2'-6"	(6'-8")	1 3/4"	HM		HM	PAINT	M	–	M		02	PAIR DOORS
003	003 (HSKP STOR.)	F	3'-0"	6'-8"	1 3/4"	HM	EXT.	HM	PAINT	EXT	EXT	EXT		03	
004	004 (WATER HEATER)	F	(2)3'-0"	6'-8"	1 3/4"	HM		HM	PAINT	D	–	D		02	PAIR DOORS
006	006 (STOR.)	F	3'-0"	6'-8"	1 3/4"	HM	EXT.	HM	PAINT	EXT	EXT	EXT		03	
007	007 (CORRIDOR)	F	3'-0"	6'-8"	1 3/4"	HM	EXT.	HM	PAINT	EXT	EXT	EXT		03	
008	008 (STOR.)	F	3'-0"	6'-8"	1 3/4"	HM	EXT.	HM	PAINT	EXT	EXT	EXT		03	
009	009 (STOR.)	F	3'-0"	6'-8"	1 3/4"	HM	EXT.	HM	PAINT	EXT	EXT	EXT		03	
010	010 (STOR.)	F	3'-0"	6'-8"	1 3/4"	HM	EXT.	HM	PAINT	EXT	EXT	EXT		03	
011	011 (CORRIDOR ENTRY)	F	3'-0"	6'-8"	1 3/4"	HM		HM	PAINT	NOA	NOA	NOA	90 MIN.	04	12-0305.14
012	012 (BREAK ROOM)	DF	(2)3'-0"	6'-8"	1 3/4"	HM	EXT.	HM	PAINT	EXT	EXT	EXT		02	PAIR DOORS
013	013 (WOMEN TOILET)	F	3'-0"	6'-8"	1 3/4"	HM		HM	PAINT	D	–	D		05	
014	014 (WOMEN LOCK.)	F	3'-0"	6'-8"	1 3/4"	HM		HM	PAINT	D	–	D		06	
015	015 (MEN LOCKER)	F	3'-0"	6'-8"	1 3/4"	HM		HM	PAINT	D	–	D		06	
016	016 (MEN TOILET)	F	3'-0"	6'-8"	1 3/4"	HM		HM	PAINT	D	–	D		05	
017	017 (ELEC. ENTRY)	F	3'-0"	6'-8"	1 3/4"	HM		HM	PAINT	NOA	NOA	NOA	90 MIN.	07	12-0305.14
018	018 (STORAGE)	F	3'-0"	6'-8"	1 3/4"	HM		HM		M	–	M		08	
019a	019a (STOR.)	F	3'-0"	6'-8"	1 3/4"	HM		HM	PAINT	F	–	F		08	
020	020 (STOR.)	F	3'-0"	6'-8"	1 3/4"	HM		HM	PAINT	F	–	F		03	
021	021 (UTILITY)	F	3'-0"	6'-8"	1 3/4"	HM		HM	PAINT	F	–	F		03	
022	NOT USED														
023	NOT USED														
024	024 (STOR.)	F	3'-0"	6'-8"	1 3/4"	HM		HM	PAINT	M	–	M		03	
025	NOT USED														
026	026 (CLOSET)	F	3'-0"	6'-8"	1 3/4"	HM	EXT.	HM	PAINT	EXT	EXT	EXT		009	
027	NOT USED														
028	028 (TOILET ROOM)	F	3'-0"	6'-8"	1 3/4"	HM		HM	PAINT	D	–	D		05	

LEVEL 1

DOOR NUMBER	LOCATION	DOOR TYPE	DOOR WIDTH	DOOR HEIGHT	DOOR THICK	DOOR MATL	FRAME TYPE	FRAME MATL	FINISH	HEAD	SILL	JAMB	FIRE PROTECT RATING (MIN)	HDWR SET	REMARKS
100	ELEVATOR MACH.RM.	F	3'-6"	7'-0"	1 3/4"	HM	4	HM		NOA	NOA	NOA	45 MIN.	41	12-0305.14
100A	100 (SEATING LOUNGE)	DG	(2)3'-0"	8'-0"	3/4"	GL	4	AL		P	P	–		10	REQUIRES SP101 11-1207.09
100B	100 (SEATING LOUNGE)	DSF	(2)3'-0"	8'-0"	3/4"	AL/GL	3	AL		NOA	NOA	NOA		10	13-0617.29
101	101 (CONCIERGE)	F	2'-6"	7'-0"	1 3/4"	WD	EXT	(HM)	PAINT	EXT	EXT	EXT		11	
102	102 (SUNDRIES)	F	2'-4"	7'-0"	1 3/4"	WD	EXT	(HM)	PAINT	EXT	EXT	EXT		11	
103	103 (MEN'S RR)	F	3'-0"	7'-0"	1 3/4"	WD	EXT	(HM)	PAINT	EXT	EXT	EXT		12	
104	104 (WOMEN'S RR)	F	3'-0"	7'-0"	1 3/4"	WD	EXT	(HM)	PAINT	EXT	EXT	EXT		13	
105	105 (CORRIDOR)	F	3'-6"	6'-8"	1 3/4"	HM	1	HM	PAINT	D	–	D		29	SMOKE DOOR ON HOLD OPEN
105A	105A (HOUSE KEEPING)	F	2'-6"	6'-8"	1 3/4"	HM	EXT	(HM)	PAINT	EXT	EXT	EXT	45 MIN.	14	
105B (struck)	105B (HOUSE KEEPING)	F	2'-8"	6'-8"	1 3/4"	HM	EXT	(HM)	PAINT	EXT	EXT	EXT		09	
106	106 (CORRIDOR)	DF	(2)2'-2"	6'-8"	1 3/4"	HM		HM	PAINT	C	–	C	–	15	NO RATING REQUIRED
106A	NOT USED														
107A (struck)	107 (BAR/COFFEE)	DSF	(2)3'-0"	7'-0"	9/16"	AL/GL	7	AL	PAINT	NOA	NOA	NOA		10	13-0617.29
107B (struck)	107 (BAR/COFFEE)	DG	(2)2'-11"	7'-0"	1/2"	GL	2	A	PAINT	P	P			16	
107C	NOT USED														
107D	107 (BAR/COFFEE)	F	3'-0"	7'-0"	1 3/4"	WD	EXT	(HM)	PAINT	EXT	EXT	EXT		09	PAINT TO MATCH WALLCOVERING
108A	108 (LIBRARY)	SF	3'-0"	8'-9½"	9/16"	AL/GL		AL	PAINT	NOA	NOA	NOA		16	13-0617.29
108B	108 (LIBRARY)	F	2'-8"	7'-0"	1 3/4"	WD	EXT	(WD)	PAINT	EXT	EXT	EXT		17	
108C	108 (LIBRARY)	DG	(2)2'-8"	7'-0"	1/2"	GL	2	AL	PAINT	P	P	–		16	
108D	108 (LIBRARY)	F	2'-4"	7'-0"	1 3/4"	WD	EXT	(HM)	PAINT	EXT	EXT	EXT		11	
109	109 (FRONT DESK)	F	2'-4"	7'-0"	1 3/4"	HM	EXT	(HM)	PAINT	EXT	EXT	EXT		11	
110	110 (FRONT OFFICE)	F	2'-6"	7'-0"	1 3/4"	HM	EXT	(HM)	PAINT	EXT	EXT	EXT		11	
111	NOT USED														
112	112 (LUGGAGE STOR.)	F	2'-4"	6'-11"	1 3/4"	HM	EXT	(HM)	PAINT	EXT	EXT	EXT	45 MIN.	18	
113 (struck)	113 (HSKP)	F	2'-8"	6'-8"	1 3/4"	HM	EXT	(HM)	PAINT	EXT	EXT	EXT	45 MIN.	14	
114A	NOT USED														
114B	NOT USED														
115 (struck)	115 (CLOSET)	F	2'-4"	6'-8"	1 3/4"	HM	EXT	(HM)	PAINT	EXT	EXT	EXT	45 MIN.	03	
116	NOT USED														
117A	NOT USED														
117B	117 (KITCHEN ENTRY)	F	3'-0"	6'-8"	1 3/4"	HM		HM		NOA	NOA	NOA		20	12-0305.14
117C	117 (KITCHEN)	F	3'-0"	6'-8"	1 3/4"	HM		HM		D	–	D		19	
117D	NOT USED														
118	118 (CLOSET)	F	2'-8"	6'-8"	1 3/4"	HM	EXT	(HM)	PAINT	EXT	EXT	EXT	45 MIN.	03	
119	NOT USED														
120	120 (BASEMENT ENTRY)	F	2'-6"	7'-0"	1 3/4"	HM	EXT	(HM)	PAINT	EXT	EXT	EXT	45 MIN.	06	
121A	121 (MULTI-FUNCTION)	HIST	(2)1'-9"	VERIFY	1 3/4"	(WD)	EXT	(HM)	PAINT	EXT	EXT	EXT		10	SP101 11-1207.09
121B	121 (MULTI-FUNCTION)	HIST	(2)1'-9"	VERIFY	1 3/4"	(WD)	EXT	(HM)	PAINT	EXT	EXT	EXT		10	SP101 11-1207.09
121C	121 (MULTI-FUNCTION)	HIST	(2)1'-10"	VERIFY	1 3/4"	(WD)	EXT	(HM)	PAINT	EXT	EXT	EXT		10	
121D	121 (MULTI-FUNCTION)	HIST	(2)1'-10"	VERIFY	1 3/4"	(WD)	EXT	(HM)	PAINT	EXT	EXT	EXT		10	
122	122 (KITCHEN)	SF	3'-0"	8'-0"	1 3/4"		1	AL	GOLD ANOD.	(NOA)	(NOA)	(NOA)	45 MIN.	21	(13-0617.29)
123	NOT USED								GOLD ANOD.						
124	124 (KITCHEN ENTRY)	SF	3'-0"	8'-0"	1 3/4"		1	AL	GOLD ANOD.	NOA	NOA	NOA	45 MIN.	22	13-0617.29
125	NOT USED														
126 (struck)	126 (BASEMENT ENTRY)	F	2'-6"	7'-0"	1 3/4"	HM	EXT	(HM)	PAINT	EXT	EXT	EXT	45 MIN.	06	
127	127 (STOR.)	F	2'-2"	6'-8"	1 3/4"	HM	EXT	(HM)	PAINT	EXT	EXT	EXT	45 MIN.	03	
128	128 (GYM)	G	3'-0"	8'-0"	3/4"	GLASS	9	WD		P	P	–		23	
129	KITCHEN PREP	SF	3'-0"	8'-0"	1 3/4"		1	AL	GOLD ANOD.	(NOA)	(NOA)	(NOA)	45 MIN.	21	(13-0617.29)
130A	130A (WOMEN'S RR)	F	3'-0"	8'-0"	1 3/4"	HM	1	HM	PAINT	NOA	NOA	NOA		24	12-0305.14
130B	130B (W RR CLOSET)	F	3'-0"	8'-0"	1 3/4"	HM	1	HM	PAINT	–	–	–		24	
131	131 (MEN'S RR)	F	3'-0"	8'-0"		HM	1	HM	PAINT	NOA	NOA	NOA		24	12-0305.14
132	132 (CLOSET)	F	3'-0"	VERIFY		HM	EXT	HM	PAINT	EXT	EXT	EXT	45 MIN.	03	
133	NOT USED														
134	NOT USED														
135	NOT USED														
136	NOT USED														
137	137 (STOR.)	F	VERIFY	VERIFY	1 3/4"	HM	EXT	HM	PAINT	EXT	EXT	EXT	45 MIN.	03	
138	138 (STOR.)	F	3'-0"	6'-8"	1 3/4"	HM		HM	PAINT	NOA	NOA	NOA		25	12-0305.14
139	139 (STOR.)	F	2'-4"	8'-0"	1 3/4"	HM		HM	PAINT	NOA	NOA	NOA	45 MIN.	26	12-0305.14
140	140 (STOR.)	F	2'-4"	8'-0"	1 3/4"	HM		HM	PAINT	NOA	NOA	NOA	45 MIN.	26	12-0305.14
141	COURTYARD GATE	GATE	3'-0"	6'-0"	1 3/4"	IPE		TS	PAINT	–	–	–		07	PANIC HARDWARE
142a (struck)	POOL DECK GATE	GATE	3'-0"	4'-0"	1 3/4"	AL		TS	PAINT						PANIC HARDWARE
142b	POOL DECK GATE	GATE	3'-0"	4'-0"	1 3/4"	AL		TS	PAINT	–	–	–		–	CHILD SAFETY LATCH
S1A.1A	STAIRS 1A	F	2'-9"	6'-8"	1 3/4"	HM		HM	PAINT	D	E	D	60 MIN.	15	
S1A.1B	STAIRS 1A	F	2'-8"	6'-8"	1 3/4"	HM		HM	PAINT	NOA	NOA	NOA	–	27	12-0305.14 PANIC HARDWARE
S2A.1A	STAIRS 2A	F	2'-8"	6'-8"	1 3/4"	HM		HM	PAINT	M	E	M	60 MIN.	15	
S2A.1B	STAIRS 2A	F	2'-8"	6'-8"	1 3/4"	HM		HM	PAINT	D	E	D		03	
S2A.1C	STAIRS 2A	F	2'-8"	6'-8"	1 3/4"	HM		HM	PAINT	NOA	NOA	NOA	–	27	12-0305.14 PANIC HARDWARE
S5A.1A (struck)	STAIRS 5A	F	2'-9"	6'-8"	1 3/4"	HM		HM	PAINT	M	E	M	60 MIN.	15	PANIC HARDWARE
S5A.1B	NOT USED														
S5A.1C	STAIRS 5A	F	2'-8"	6'-8"	1 3/4"	HM		HM	PAINT	NOA	NOA	NOA	60 MIN.	27	12-0305.14 PANIC HARDWARE
S6A.1	STAIRS 6A	F	3'-0"	6'-11"	1 3/4"	HM		HM	PAINT	D	–	D	45 MIN.	03	
S1B.1	STAIRS 1B	F	2'-8"	6'-8"	1 3/4"	HM		HM	PAINT	NOA	NOA	NOA		28	12-0305.14 S1B.2 15 (VERIFY)
S3B.1	STAIRS 3B	F	2'-8"	6'-8"	1 3/4"	HM		HM	PAINT	NOA	NOA	NOA		27	12-0305.14 PANIC HARDWARE
S8B.1 (struck)	STAIRS 8B	F	2'-10"	6'-8"	1 3/4"	HM		HM	PAINT	NOA	NOA	NOA		27	12-0305.14 PANIC HARDWARE
S10B.1	NOT USED														
S12B.1	STAIRS 12B	F	2'-10"	6'-8"	1 3/4"	HM		HM	PAINT	NOA	NOA	NOA		27	12-0305.14 PANIC HARDWARE

LEVEL 2

DOOR NUMBER	LOCATION	DOOR TYPE	DOOR WIDTH	DOOR HEIGHT	DOOR THICK	DOOR MATL	FRAME TYPE	FRAME MATL	FINISH	HEAD	SILL	JAMB	FIRE PROTECT RATING (MIN)	HDWR SET	REMARKS
201 (struck)	201 (IT ROOM)	F	VERIFY	VERIFY	1 3/4"	WD		WD	PAINT	A	–	A	45 MIN.	03	
202	202 CORRIDOR	DF	VERIFY	VERIFY	1 3/4"	HM		HM	PAINT	C	C	C	–	29	NO RATING REQUIRED
202A	NOT USED														
203 (struck)	203 (MAID'S CLOSET)	F	VERIFY	VERIFY	1 3/4"	WD	EXT	(WD)	PAINT	EXT	EXT	EXT	45 MIN.	14	
204 (struck)	204 (STOR.)	F	VERIFY	VERIFY	1 3/4"	WD	EXT	(WD)	PAINT	D	–	D	45 MIN.	03	
205	205 (CORRIDOR)	DF	VERIFY	VERIFY	1 3/4"	HM	–	HM	PAINT	D	–	D	–	15	NO RATING REQUIRED
205A	NOT USED														
205B	NOT USED														
205C (struck)	205 (CORRIDOR)	F	4'-4"	6'-8"	1 3/4"	HM		HM	PAINT	C	C	C	–	29	SMOKE DOOR ON HOLD OPEN
205D	205 (CORRIDOR)	DF	4'-4"	6'-8"	1 3/4"	HM		HM	PAINT	C	C	C	–	29	SMOKE DOOR ON HOLD OPEN
206	206 (CLOSET)	F	VERIFY	VERIFY	1 3/4"	WD	EXT	(WD)	PAINT	EXT	EXT	EXT	45 MIN.	03	
208	208 (CLOSET)	F	VERIFY	VERIFY	1 3/4"	WD	EXT	(WD)	PAINT	EXT	EXT	EXT	45 MIN.	03	
211	211 (CLOSET)	F	VERIFY	VERIFY	1 3/4"	WD	EXT	(WD)	PAINT	EXT	EXT	EXT	45 MIN.	03	180° DOOR SWING
213	213 (CLOSET)	F	VERIFY	VERIFY	1 3/4"	WD	EXT	(WD)	PAINT	EXT	EXT	EXT	45 MIN.	03	
214 (struck)	214 (CLOSET)	F	2'-4"	8'-0"	1 3/4"	HM		HM	PAINT	NOA	NOA	NOA	45 MIN.	26	12-0305.14
214a	NOT USED														
215	215 (CLOSET)	F	2'-4"	8'-0"	1 3/4"	HM		HM	PAINT	NOA	NOA	NOA	45 MIN.	26	12-0305.14
S1A.2	STAIRS 1A	F	2'-8"	6'-8"	1 3/4"	HM		HM	PAINT	M	–	M	60 MIN.	15	
S2A.2	STAIRS 2A	F	2'-8"	6'-8"	1 3/4"	HM		HM	PAINT	M	–	M	60 MIN.	15	
S2B.2	STAIRS 2B	F	2'-8"	6'-8"	1 3/4"	HM		HM	PAINT	NOA	NOA	NOA		35	12-0305.14
S2B.2a	STAIRS 2B	F	2'-8"	6'-8"	1 3/4"	HM		HM	PAINT	NOA	NOA	NOA		44	12-0305.14
S5A.2	STAIRS 5A	F	2'-8"	6'-8"	1 3/4"	HM		HM	PAINT	M	–	M	60 MIN.	15	
S1B.2	STAIRS 1B	F	2'-8"	6'-8"	1 3/4"	HM		HM	PAINT	NOA	NOA	NOA		27	12-0305.14
S3B.2	STAIRS 3B	F	2'-8"	6'-8"	1 3/4"	HM		HM	PAINT	NOA	NOA	NOA		27	12-0305.14
S8B.2	STAIRS 8B	F	2'-8"	6'-8"	1 3/4"	HM		HM	PAINT	NOA	NOA	NOA		27	12-0305.14
S9B.1	STAIRS 9B	F	2'-8"	6'-8"	1 3/4"	HM		HM	PAINT	NOA	NOA	NOA		35	12-0305.14
S9B.2	STAIRS 9B	F	2'-8"	6'-8"	1 3/4"	HM		HM	PAINT	NOA	NOA	NOA		35	12-0305.14
S12B.2	STAIRS 12B	F	2'-8"	6'-8"	1 3/4"	HM		HM	PAINT	NOA	NOA	NOA		27	12-0305.14

LEVEL 3

DOOR NUMBER	LOCATION	DOOR TYPE	DOOR WIDTH	DOOR HEIGHT	DOOR THICK	DOOR MATL	FRAME TYPE	FRAME MATL	FINISH	HEAD	SILL	JAMB	FIRE PROTECT RATING (MIN)	HDWR SET	REMARKS
301 (struck)	301 (IT ROOM)	F	3'-6"	6'-8"	1 3/4"	HM	EXT	HM	PAINT	EXT	EXT	EXT	45 MIN.	03	
302	302 (CORRIDOR)	DF	(2)2'-2"	6'-8"	1 3/4"	HM	EXT	HM	PAINT	EXT	EXT	EXT	–	15	NO RATING REQUIRED
302A	NOT USED														
303 (struck)	303 (MAID'S CLOSET)	F	2'-8"	6'-8"	1 3/4"	HM	EXT	HM	PAINT	EXT	EXT	EXT	45 MIN.	14	
304 (struck)	304 (CLOSET)	F	2'-4"	6'-8"	1 3/4"	HM	EXT	HM	PAINT	EXT	EXT	EXT	45 MIN.	03	
305	305 (CORRIDOR)	DF	(2)2'-4"	6'-8"	1 3/4"	HM	1	HM	PAINT	D	–	D	–	43	NO RATING REQUIRED
305A	NOT USED														
305B	NOT USED														
305C (struck)	305 (CORRIDOR)	DF	(2)2'-2"	6'-8"	1 3/4"	HM		HM	PAINT	C	–	C	–	29	SMOKE DOOR ON HOLD OPEN
305D	305 (CORRIDOR)	F	4'-4"	6'-8"	1 3/4"	HM		HM	PAINT	C	–	C	–	29	SMOKE DOOR ON HOLD OPEN
306	306 (HOUSEKEEPING)	F	2'-4"	8'-0"	1 3/4"	HM		HM	PAINT	NOA	NOA	NOA	45 MIN.	26	12-0305.14
307	307 (HOUSEKEEPING)	F	2'-4"	8'-0"	1 3/4"	HM		HM	PAINT	NOA	NOA	NOA	45 MIN.	26	12-0305.14
308A	308A	F	2'-8"	6'-8"	1 3/4"	HM		HM	PAINT	NOA	NOA	NOA		30	12-0305.14
308B	308B	F	2'-8"	6'-8"	1 3/4"	HM		HM	PAINT	NOA	NOA	NOA		30	12-0305.14
309A	309A	F	2'-8"	6'-8"	1 3/4"	HM		HM	PAINT	NOA	NOA	NOA		30	12-0305.14
309B	309B	F	2'-8"	6'-8"	1 3/4"	HM		HM	PAINT	NOA	NOA	NOA		30	12-0305.14
S1A.3	STAIRS 1A	F	2'-8"	6'-8"	1 3/4"	HM		HM	PAINT	M	–	M	60 MIN.	15	
S2A.3	STAIRS 2A	F	2'-8"	6'-8"	1 3/4"	HM		HM	PAINT	M	–	M	60 MIN.	15	
S5A.3	STAIRS 5A	F	2'-8"	6'-8"	1 3/4"	HM		HM	PAINT	M	–	M	60 MIN.	15	

LEVEL 4

DOOR NUMBER	LOCATION	DOOR TYPE	DOOR WIDTH	DOOR HEIGHT	DOOR THICK	DOOR MATL	FRAME TYPE	FRAME MATL	FINISH	HEAD	SILL	JAMB	FIRE PROTECT RATING (MIN)	HDWR SET	REMARKS
401	401 (UTILITY)	F	3'-0"	6'-8"	1 3/4"	HM		HM	PAINT	NOA	NOA	NOA		30	12-0305.14
S2A.4	STAIRS 2A	F	2'-8"	6'-8"	1 3/4"	HM		HM	PAINT	NOA	NOA	NOA	60 MIN.	42	12-0305.14
S6A.4	STAIRS 6A	F	3'-0"	6'-8"	1 3/4"	HM		HM	PAINT	M	–	M	60 MIN.	15	
S6A.4a	STAIRS 6A	F	3'-0"	6'-8"	1 3/4"	HM		HM	PAINT	NOA	NOA	NOA	60 MIN.	42	12-0305.14
S6A.4b	STAIRS 6A	F	3'-0"	6'-8"	1 3/4"	HM		HM	PAINT	NOA	NOA	NOA	60 MIN.	42	12-0305.14

GUESTROOMS

SEE DOOR NOTE #3, REGARDING REPLACING DOORS IN EXISTING FRAMES

DOOR NUMBER	LOCATION	DOOR TYPE	DOOR WIDTH	DOOR HEIGHT	DOOR THICK	DOOR MATL	FRAME TYPE	FRAME MATL	FINISH	HEAD	SILL	JAMB	FIRE PROTECT RATING (MIN)	HDWR SET	REMARKS
G1	INTERIOR ENTRY DOOR	FL	2'-8"	6'-8"	1 3/4"	WD	5	(WD)	PAINT	B	(WD)	B	–	32	VERIFY PAINT COLOR/FRAME FOR BOTH SIDES OF DOOR
G2	BATHROOM PKT. DOOR	F	3'-0"	6'-8"	1 3/8"	WD		WD	PAINT	O	2/A716	N	–	33	JOHNSON 1500 POCKET DOOR FRAME
G3	BATHROOM DOOR	WD	2'-4"	6'-8"	1 1/4"	WD		(WD)	PAINT	B	2/A716	B	–	39	
G4	ENTRY STAIRWELL DOOR	HM	2'-10"	6'-10"	1 3/4"	HM		HM	PAINT	M	(WD)	M	60 MIN.	32	
G5	EXTERIOR ENTRY DOOR	HM	2'-8"	8'-0"	1 3/4"	HM	1	HM	PAINT	NOA	NOA	NOA	20 MIN.	35	12-0305.14 PAINT TO MATCH EXTERIOR PAINT
G6	BATHROOM DOOR	WD	3'-0"	6'-8"	1 3/4"	WD	1	WD	PAINT	A	2/A716	A	–	34	
G7	BATHROOM PKT. DOOR	F	2'-8"	6'-8"	1 3/8"	WD		WD	PAINT	O	2/A716	N	–	36	JOHNSON 1500 POCKET DOOR FRAME
G8	COMMUNICATING DOOR	HM	3'-0"	8'-0"	1 3/4"	WD	1	HM	PAINT	G	G	H	20 MIN.	37	CECO STC DOOR STC-52
G9*	PATIO DOOR	GL-1	3'-0"	8'-0"	1 3/4"	ALUM	1	ALUM	PAINT	NOA	NOA	NOA	–	38	12-0706.03 180° DOOR WITH FLOOR MOUNTED DOOR STOPS
G10	BATHROOM DOOR	WD	2'-8"	6'-8"	1 3/4"	WD		(WD)	PAINT	B	2/A716	B	–	30	
G11	BATHROOM DOOR	WD	2'-6"	6'-8"	1 3/4"	WD		(WD)	PAINT	B	2/A716	B	–	30	
G12	COMMUNICATING DOOR	WD	2'-8"	6'-8"	1 3/4"	WD		(WD)	PAINT	B	2/A716	B	20 MIN.	45	SMOKE PARTITION

* ALL DOORS WITH DIRECT ACCESS TO POOL DECK AREA MUST BE FURNISHED WITH AN EXIT ALARM IN COMPLIANCE WITH UL 2017

DOOR NOTES

1. ALL DOORS TO BE PAINTED PT-02, SEMI-GLOSS FINISH, U.O.N.
2. ALL DOOR FRAMES TO BE PAINTED PT-02, SEMI-GLOSS FINISH, U.O.N.
3. ALL EXISTING FRAMES TO REMAIN IN THE HADDON AND CAMPTON BUILDINGS AT ALL LOCATIONS THAT DO NOT REQUIRE FIRE RATING UPGRADE, ENLARGED DOOR WIDTH, AND/OR NEW DOOR LOCATION. THE INTENT IS TO MAINTAIN THE DOOR FRAMES IN THE EXISTING HISTORIC WALLS, AND TO GREATEST EXTENT POSSIBLE TO NOT DISTURB INTERIOR ENVELOPE, AND IN KEEPING WITH LEVEL 1 ALTERATION. CONTRACTOR TO INSPECT ALL EXISTING FRAMES TO DETERMINE IF WOOD FRAMES CAN BE RESTORED/UTILIZED OR IF NEW HOLLOW METAL FRAME IS NEEDED.
4. VERIFY ALL DOOR SIZES BEFORE ORDERING NEW DOORS.
5. ALL GLASS TO BE TEMPERED GLASS.
6. ALL DOORS WITH PANIC HARDWARE ARE SELF CLOSING.
7. SELF CLOSING HARDWARE INCLUDED IN SETS: 01, 02, 03, 04, 06, 08, 11, 12, 13, 14, 15, 19, 20, 21, 22, 23, 24, 25, 27, 28, 29, 30, 31, 35
8. ALL FIRE RATED DOORS TO BE SELF CLOSING AND SELF LATCHING.
9. RFID HARDWARE FOR GUESTROOM AND RELATED GUEST ACCESS DOORS TO BE PROVIDED AND INSTALLED UNDER SEPARATE CONTRACT [MANUF.: VINGCARD / SIGNATURE RFID CONTACT LESS]; COORDINATE AND CONFIRM FINAL SELECTED MANUF./MODEL WITH OWNER.
10. REFER TO PROJECT MANUAL FOR DOOR HARDWARE SETS AND N.O.A. NUMBERS.
11. EXTERIOR HOLLOW METAL DOORS ADJACENT TO AIR-CONDITIONED SPACE IS TO BE INSULATED.
12. ANY EXIT DOOR SERVING MORE THAN 99 OCCUPANTS MUST HAVE PANIC HARDWARE
13. ALL EXIT DOORS MUST BE SINGLE MOTION RELEASE AND MUST NOT NEED ANY KEY, TOOL, OR SPECIAL KNOWLEDGE TO OPERATE
14. ALL DOORS SWINGING INTO MEANS OF EGRESS MUST BE SELF CLOSING
15. ANY EXIT DOOR SERVING MORE THAN 49 OCCUPANTS MUST SWING IN THE DIRECTION OF TRAVEL
16. THE FORCE FOR PUSHING OR PULLING OPEN INTERIOR SWINGING EGRESS DOORS, OTHER THAN FIRE DOORS, SHALL NOT EXCEED 5LBS.

STORM PANEL

GENERAL NOTES:
STORM PANEL NOA 11-1207.09
SEE NOA FOR REF'D DETAILS.
SHOP DWGS. REFLECT F.V. OPNGS

STORM PANEL NUMBER	LOCATION	PANEL MATL	PANEL THK.	OPNG WIDTH	OPNG HEIGHT	TRACK MATL	MTG. SURFACE TOP	MTG. SURFACE BOTT	HEAD	SILL	JAMB	(PSF) DESIGN LOAD	(PSF) APPRD TEST	REMARKS
SP001	BASEMENT WEST SIDE	ALUM	1¾"	3'-10"	4'-10"	ALUM	TRANS	SLAB	U-TRAK	STD.ANG	DTL-B	54/-72	+/-120	
SP002	BASEMENT SOUTH SIDE			5'-0"	4'-10"									
SP102	121B MULTI-FUNC. (E)			3'-6"	2'-10"	ALUM	WALL	SLAB	U-TRAK	STD.ANG				
SP103	121A MULTI-FUNC. (W)			3'-6"	2'-10"	ALUM	SLAB	SLAB	U-TRAK	STD.ANG				
SP104a	STAIR 4B PORTAL			2'-11"	1'-7"	ALUM	SLAB	SLAB	U-TRAK	STD.ANG				
SP104b	STAIR 5B PORTAL			2'-11"	1'-8"	ALUM	SLAB	SLAB	U-TRAK	STD.ANG				
SP104c	STAIR 6B PORTAL			2'-11"	2'-3"	ALUM	SLAB	SLAB	U-TRAK	STD.ANG				
SP105	CAMPTON CORRIDOR S.			4'-4"	2'-10"	ALUM	SLAB	SLAB	U-TRAK	STD.ANG				
SP106	CAMPTON CORRIDOR N.			4'-4"	2'-10"	ALUM	WALL	SLAB	U-TRAK	STD.ANG				
SP107	STAIR 3B PORTAL			2'-9"	2'-11"	ALUM	SLAB	SLAB	U-TRAK	STD.ANG				
SP108	MEN OUTDOOR WC			4'-0"	2'-11"	ALUM	SLAB	SLAB	U-TRAK	STD.ANG				
SP109	WOMEN OUTDOOR WC			4'-0"	2'-11"	ALUM	SLAB	SLAB	U-TRAK	STD.ANG				THE SCHEDULE HAS SUBSTANTIAL CHANGES. A FEW DOORS ADDED. THE STORM PANELS ARE NEW
SP110	PS STORAGE ROOM			4'-6"	3'-0"	ALUM	SLAB	SLAB	U-TRAK	STD.ANG				

APPROVED MIAMI BEACH FIRE DEPARTMENT

HADDON HALL
1500 COLLINS AVE
MIAMI BEACH, FL

KEYPLAN N.T.S.

REVISIONS

NO.	DESCRIPTION	ISSUE DATE
1	PROGRESS TO 100% CD	02-18-2014
1a	CLARIFICATION TO 100% CD	02-21-2014
1B	DOOR-WINDOW COORD.	03-05-2014
4	FIRE REVIEW COMMENTS	04-01-2014
7	POOL SUTIES WALL	04-09-2014
9	KITCHEN REINFORCEMENT	05-30-2014
10	MASTER PERMIT COMMENTS	07-03-2014
11	P&Z COMMENTS	07-14-2014
12	FIRE & MTCI PERMIT COMMENTS	08-21-2014
12a	FIRE PERMIT COMMENTS	09-29-2014

MTCI PRIVATE PROVIDER SERVICES, LLC
Construction Plans Review, Inspections, Testing & Consulting

	REVIEWER INITIALS	DATE REVIEWED
BUILDING	EM	11-10-14
STRUCTURAL		
MECHANICAL		
ELECTRICAL		
PLUMBING		
SITE CIVIL		

100% CONSTRUCTION DOCUMENT SET

SEAL
10.9.14
Jonathan Cardello
Lic. # AR93391

ADD Inc Architecture Interiors Planning
One Biscayne Tower
Suite 1670
Two South
Biscayne Boulevard
Miami, Fl 33131
T. 305.482.8700
F. 305.482.8770
www.addinc.com
Lic. # AA26001507
Boston Miami

JOB NUMBER: 13036.00
CHECKED BY:
ISSUE DATE: FEBRUARY 18, 2014
SCALE: REFER TO SHEET

SHEET TITLE
DOOR SCHEDULE

SHEET NUMBER
A191

COPYRIGHT ADD INC 2011

SpaXtraRef: 92422

Hardware Group No. 01

For use on mark/door #(s):
001

Provide each PR door(s) with the following:

Qty		Description	Catalog Number	Finish	Mfr
6	EA	HW HINGE	5BB1HW 4.5 X 4.5 NRP	630	IVE
2	EA	SURFACE BOLT	SB360 12" T	604	IVE
1	EA	ENTRANCE W/DEADBOLT	L9453P 07A L583-363	626	SCH
2	EA	SURFACE CLOSER	4040XP SCUSH SRI	689	LCN
2	EA	KICK PLATE	8400 10" X 1 1/2" LDW	630	IVE
1	EA	RAIN DRIP	142A	AL	ZER
1	SET	SEALS	328AA	AL	ZER
1	EA	ASTRAGAL	Z BY MFG	600	
1	EA	THRESHOLD	65A MSLA-10	AL	ZER

Hardware Group No. 02

For use on mark/door #(s):
002 004 012

Provide each PR door(s) with the following:

Qty		Description	Catalog Number	Finish	Mfr
6	EA	HINGE	5BB1 4.5 X 4.5	652	IVE
2	EA	MANUAL FLUSH BOLT	FB458	626	IVE
1	EA	DUST PROOF STRIKE	DP2	626	IVE
1	EA	CLASSROOM LOCK	ND70PD ATH	626	SCH
2	EA	SURFACE CLOSER	1461	689	LCN
2	EA	KICK PLATE	8400 10" X 1 1/2" LDW	630	IVE
2	EA	WALL STOP	WS407CCV	630	IVE
1	SET	SEALS	188S	BLK	ZER
1	EA	ASTRAGAL	Z BY MFG	600	

Hardware Group No. 03

For use on mark/door #(s):

003	006	007	008	009	010
020	021	024	115	118	127
132	134	135	137	201	204
206	208	211	213	301	304
S10B	S2A.1B	S5A.1B	S6A.1	103B	

Provide each SGL door(s) with the following:

Qty		Description	Catalog Number	Finish	Mfr
3	EA	HINGE	5BB1 4.5 X 4.5	652	IVE
1	EA	STOREROOM LOCK	ND80PD ATH	626	SCH
1	EA	SURFACE CLOSER	1461 REG OR PA AS REQ	689	LCN
1	EA	KICK PLATE	8400 10" X 2" LDW	630	IVE
1	EA	WALL STOP	WS407CCV	630	IVE
1	SET	SEALS	188S	BLK	ZER

Hardware Group No. 04

For use on mark/door #(s):
011 S1B.0 S8B.0

Provide each SGL door(s) with the following:

Qty		Description	Catalog Number	Finish	Mfr
3	EA	HW HINGE	5BB1HW 4.5 X 4.5 NRP	630	IVE
1	EA	ENTRANCE W/DEADBOLT	L9453P 07A L583-363	626	SCH
1	EA	SURFACE CLOSER	4040XP SCUSH SRI	689	LCN
1	EA	KICK PLATE	8400 10" X 2" LDW	630	IVE
1	EA	RAIN DRIP	142A	AL	ZER
1	SET	SEALS	328AA	AL	ZER
1	EA	THRESHOLD	65A MSLA-10	AL	ZER

Hardware Group No. 05

For use on mark/door #(s):
013 016 028

Provide each SGL door(s) with the following:

Qty		Description	Catalog Number	Finish	Mfr
3	EA	HINGE	5BB1 4.5 X 4.5	652	IVE
1	EA	PRIVACY LOCK	ND40S ATH	626	SCH
1	EA	KICK PLATE	8400 10" X 2" LDW	630	IVE
1	EA	MOP PLATE	8400 4" X 1" LDW	630	IVE
1	EA	WALL STOP	WS407CCV	630	IVE
3	EA	SILENCER	SR64	GRY	IVE

Hardware Group No. 06

For use on mark/door #(s):
014 015 120 125

Provide each SGL door(s) with the following:

Qty		Description	Catalog Number	Finish	Mfr
3	EA	HINGE	5BB1 4.5 X 4.5	652	IVE
1	EA	CLASSROOM LOCK	ND70PD ATH	626	SCH
1	EA	SURFACE CLOSER	4040XP REG OR PA AS REQ	689	LCN
1	EA	KICK PLATE	8400 10" X 2" LDW	630	IVE
1	EA	MOP PLATE	8400 4" X 1" LDW	630	IVE
1	EA	WALL STOP	WS407CCV	630	IVE
3	EA	SILENCER	SR64	GRY	IVE

Hardware Group No. 07

For use on mark/door #(s):
017

Provide each SGL door(s) with the following:

Qty		Description	Catalog Number	Finish	Mfr
3	EA	HINGE	5BB1 4.5 X 4.5 NRP	630	IVE
1	EA	VANDL STOREROOM LOCK	ND96PD ATH	626	SCH
1	EA	SURFACE CLOSER	4040XP SCUSH SRI	689	LCN
1	EA	RAIN DRIP	142A	AL	ZER
1	SET	SEALS	328AA	AL	ZER
1	EA	THRESHOLD	65A MSLA-10	AL	ZER

Hardware Group No. 08

For use on mark/door #(s):
018 019

Provide each SGL door(s) with the following:

Qty		Description	Catalog Number	Finish	Mfr
3	EA	HINGE	5BB1 4.5 X 4.5	652	IVE
1	EA	VANDL STOREROOM LOCK	ND96PD ATH	626	SCH
1	EA	SURFACE CLOSER	1461	689	LCN
1	EA	KICK PLATE	8400 10" X 2" LDW	630	IVE
1	EA	WALL STOP	WS407CCV	630	IVE
3	EA	SILENCER	SR64	GRY	IVE

Hardware Group No. 09

For use on mark/door #(s):
026 105B 107D

Provide each SGL door(s) with the following:

Qty		Description	Catalog Number	Finish	Mfr
3	EA	HINGE	5BB1 4.5 X 4.5	652	IVE
1	EA	STOREROOM LOCK	ND80PD ATH	626	SCH
1	EA	OH STOP & HOLDER	450F	630	GLY
3	EA	SILENCER	SR64	GRY	IVE

Hardware Group No. 10

For use on mark/door #(s):
100A 100B 107A 107B 121A 121B

Provide each PR door(s) with the following:

Qty		Description	Catalog Number	Finish	Mfr
1	EA	MORTISE CYLINDER	20-013 118	626	SCH
1			BALANCE OF HARDWARE BY DOOR MANUFACTURER		

Lock Cylinders as required

Hardware Group No. 11

For use on mark/door #(s):
101 102 108D 109 110

Provide each SGL door(s) with the following:

Qty		Description	Catalog Number	Finish	Mfr
3	EA	HINGE	5BB1 4.5 X 4.5	652	IVE
1	EA	CLASSROOM LOCK	ND70PD ATH	626	SCH
1	EA	SURFACE CLOSER	1461	689	LCN
1	EA	KICK PLATE	8400 10" X 2" LDW	630	IVE
1	EA	WALL STOP	WS407CCV	630	IVE
3	EA	SILENCER	SR64	GRY	IVE

Hardware Group No. 12

For use on mark/door #(s):
103

Provide each SGL door(s) with the following:

Qty		Description	Catalog Number	Finish	Mfr
3	EA	HINGE	5BB1 4.5 X 4.5	652	IVE
1	EA	CLASSROOM LOCK	ND70PD ATH	626	SCH
1	EA	SURFACE CLOSER	1461 CUSH	689	LCN
1	EA	KICK PLATE	8400 10" X 2" LDW	630	IVE
3	EA	SILENCER	SR64	GRY	IVE

Hardware Group No. 13

For use on mark/door #(s):
104

Provide each SGL door(s) with the following:

Qty		Description	Catalog Number	Finish	Mfr
3	EA	HINGE	5BB1 4.5 X 4.5	652	IVE
1	EA	CLASSROOM LOCK	ND70PD ATH	626	SCH
1	EA	SURFACE CLOSER	1461	689	LCN
1	EA	KICK PLATE	8400 10" X 2" LDW	630	IVE
1	EA	MOP PLATE	8400 4" X 1" LDW	630	IVE
1	EA	WALL STOP	WS407CCV	630	IVE
3	EA	SILENCER	SR64	GRY	IVE

Hardware Group No. 14

For use on mark/door #(s):
105A 113 203 303

Provide each SGL door(s) with the following:

Qty		Description	Catalog Number	Finish	Mfr
3	EA	HINGE	5BB1 4.5 X 4.5	652	IVE
1	EA	MORTISE LOCK	HOTEL CARD STD	626	OWN
1	EA	SURFACE CLOSER	1461	689	LCN
1	EA	KICK PLATE	8400 10" X 2" LDW	630	IVE
1	EA	FLOOR STOP	FS436	626	IVE
1	SET	SEALS	188S	BLK	ZER

Hardware Group No. 15

For use on mark/door #(s):

106	114A	114B	202A	205A	205B
302	305A	305B	S1A.1A	S1A.2	S1A.3
S1B.2	S2A.1A	S2A.1B	S2A.2	S2A.3	
S5.1B	S5A.1A	S5A.2	S5A.3	205	302A

Provide each SGL door(s) with the following:

Qty		Description	Catalog Number	Finish	Mfr
3	EA	HINGE	5BB1 4.5 X 4.5	652	IVE
1	EA	PASSAGE SET	ND10S ATH	626	SCH
1	EA	SURFACE CLOSER	1461 REG OR PA AS REQ	689	LCN
1	EA	KICK PLATE	8400 10" X 2" LDW	630	IVE
1	EA	WALL STOP	WS407CCV	630	IVE
1	SET	SEALS	188S	BLK	ZER

Hotel lock can be used instead to rent A111 & A112 as one suite when wanted.

Hardware Group No. 16

For use on mark/door #(s):
107C 108A 108C

Provide each SGL door(s) with the following:

Qty		Description	Catalog Number	Finish	Mfr
1	EA	MORTISE CYLINDER	20-013 118	626	SCH
1			BALANCE OF HARDWARE BY DOOR MANUFACTURER		

Hardware Group No. 17

For use on mark/door #(s):
108B

Provide each SGL door(s) with the following:

Qty		Description	Catalog Number	Finish	Mfr
3	EA	HINGE	5BB1 4.5 X 4.5	652	IVE
1	EA	STOREROOM LOCK	AL80PD JUP	626	SCH
1	EA	WALL STOP	WS407CCV	630	IVE
3	EA	SILENCER	SR64	GRY	IVE

Hardware Group No. 18

For use on mark/door #(s):
112

Provide each SGL door(s) with the following:

Qty		Description	Catalog Number	Finish	Mfr
3	EA	HINGE	5BB1 4.5 X 4.5	652	IVE
1	EA	MORTISE LOCK	HOTEL CARD STD	626	OWN
1	EA	SURFACE CLOSER	1461 CUSH	689	LCN
1	EA	KICK PLATE	8400 10" X 2" LDW	630	IVE
1	SET	SEALS	188S	BLK	ZER

Hardware Group No. 19

For use on mark/door #(s):
117A 117C 117D

Provide each SGL door(s) with the following:

Qty		Description	Catalog Number	Finish	Mfr
3	EA	HINGE	5BB1 4.5 X 4.5	652	IVE
1	EA	CLASSROOM LOCK	ND70PD ATH	626	SCH
1	EA	SURFACE CLOSER	4040XP REG OR PA AS REQ	689	LCN
1	EA	KICK PLATE	8400 10" X 2" LDW	630	IVE
1	EA	MOP PLATE	8400 4" X 1" LDW	630	IVE
1	EA	FLOOR STOP	FS436	626	IVE
3	EA	SILENCER	SR64	GRY	IVE

Hardware Group No. 20

For use on mark/door #(s):
117B

Provide each SGL door(s) with the following:

Qty		Description	Catalog Number	Finish	Mfr
3	EA	HW HINGE	5BB1HW 4.5 X 4.5 NRP	630	IVE
1	EA	ENTRANCE W/DEADBOLT	L9453P 07A L583-363	626	SCH
1	EA	SURFACE CLOSER	4040XP EDA SRI	689	LCN
1	EA	KICK PLATE	8400 10" X 2" LDW	630	IVE
1	EA	WALL STOP/HOLDER	WS445	626	IVE
1	SET	SEALS	328AA	AL	ZER
1	EA	THRESHOLD	65A MSLA-10	AL	ZER

Hardware Group No. 21

For use on mark/door #(s):
122

Provide each SGL door(s) with the following:

Qty		Description	Catalog Number	Finish	Mfr
4	EA	HINGE	5BB1 4.5 X 4.5	652	IVE
1	EA	CLASSROOM LOCK	ND70PD ATH	626	SCH
1	EA	SURFACE CLOSER	4040XP REG OR PA AS REQ	689	LCN
1	EA	KICK PLATE	8400 10" X 2" LDW	630	IVE
1	EA	WALL STOP	WS407CCV	630	IVE
3	EA	SILENCER	SR64	GRY	IVE

Hardware Group No. 22

For use on mark/door #(s):
124

Provide each SGL door(s) with the following:

Qty		Description	Catalog Number	Finish	Mfr
4	EA	HW HINGE	5BB1HW 4.5 X 4.5 NRP	630	IVE
1	EA	ENTRANCE W/DEADBOLT	L9453P 07A L583-363	626	SCH
1	EA	SURFACE CLOSER	4040XP SHCUSH SRI	689	LCN
1	EA	KICK PLATE	8400 10" X 2" LDW	630	IVE
1	SET	SEALS	328AA	AL	ZER
1	EA	THRESHOLD	65A MSLA-10	AL	ZER

Hardware Group No. 23

For use on mark/door #(s):
128

Provide each SGL door(s) with the following:

Qty		Description	Catalog Number	Finish	Mfr
4	EA	HINGE	5BB1 4.5 X 4.5	652	IVE
1	EA	MORTISE LOCK	HOTEL CARD STD	626	OWN
1	EA	SURFACE CLOSER	4040XP REG OR PA AS REQ	689	LCN
1	EA	KICK PLATE	8400 10" X 2" LDW	630	IVE
1	EA	FLOOR STOP	FS436	626	IVE

Qty		Description	Catalog Number	Finish	Mfr
1	SET	SEALS	188S	BLK	ZER

Hardware Group No. 24

For use on mark/door #(s):
130B 131

Provide each SGL door(s) with the following:

Qty		Description	Catalog Number	Finish	Mfr
4	EA	HW HINGE	5BB1HW 4.5 X 4.5 NRP	630	IVE
1	EA	CLASSROOM LOCK	ND70PD ATH	626	SCH
1	EA	SURFACE CLOSER	4040XP EDA SRI	689	LCN
1	EA	KICK PLATE	8400 10" X 2" LDW	630	IVE
1	EA	WALL STOP/HOLDER	WS445	626	IVE
1	SET	SEALS	328AA	AL	ZER
1	EA	THRESHOLD	65A MSLA-10	AL	ZER

Hardware Group No. 25

For use on mark/door #(s):
138

Provide each SGL door(s) with the following:

Qty		Description	Catalog Number	Finish	Mfr
3	EA	HINGE	5BB1 4.5 X 4.5 NRP	630	IVE
1	EA	STOREROOM W/DEADBOLT	L9480P 07A L583-363	626	SCH
1	EA	SURFACE CLOSER	1461	689	LCN
1	EA	WALL STOP	WS407CCV	630	IVE
1	SET	SEALS	328AA	AL	ZER
1	EA	THRESHOLD	65A MSLA-10	AL	ZER

Hardware Group No. 26

For use on mark/door #(s):
139 140 214 215 306 307

Provide each SGL door(s) with the following:

Qty		Description	Catalog Number	Finish	Mfr
3	EA	HINGE	5BB1 4.5 X 4.5 NRP	630	IVE
1	EA	STOREROOM LOCK	ND80PD ATH	626	SCH

Qty		Description	Catalog Number	Finish	Mfr
1	EA	WALL STOP/HOLDER	WS445	626	IVE
1	SET	SEALS	328AA	AL	ZER
1	EA	THRESHOLD	65A MSLA-10	AL	ZER

Hardware Group No. 27

For use on mark/door #(s):

S12B.1	S1A.1B	S2A.1C	S3B.1	S5A.1C	S8B.1
S12B.2	S2B.1	S2B.2	S1B.2	S3B.2	S8B.2
S9B.1	S9B.2				

Provide each SGL door(s) with the following:

Qty		Description	Catalog Number	Finish	Mfr
3	EA	HW HINGE	5BB1HW 4.5 X 4.5 NRP	630	IVE
1	EA	POWER TRANSFER	EPT10	689	VON
1	EA	ELEC FIRE EXIT HARDWARE	HH-XP-98-L-F-E996-07-FSE	626	VON
1	EA	RIM CYLINDER	20-057-ICX	626	SCH
1	EA	FSIC CORE	23-030	626	SCH
1	EA	SURFACE CLOSER	4040XP SCUSH SRI	689	LCN
1	EA	KICK PLATE	8400 10" X 2" LDW	630	IVE
1	SET	SEALS	328AA	AL	ZER
1	EA	THRESHOLD	65A MSLA-10	AL	ZER
1	EA	CREDENTIAL READER	HOTEL CARD		OWN
1	EA	POWER SUPPLY	PS902	LGR	SCE

Hardware Group No. 28

For use on mark/door #(s):
S1B.1

Provide each SGL door(s) with the following:

Qty		Description	Catalog Number	Finish	Mfr
3	EA	HW HINGE	5BB1HW 4.5 X 4.5 NRP	630	IVE
1	EA	POWER TRANSFER	EPT10	689	VON
1	EA	VANDL EU STOREROOM	ND96PDEU ATH	626	SCH
1	EA	OH STOP	90S	630	GLY
1	EA	SURFACE CLOSER	4040XP SRI	689	LCN
1	EA	MOUNTING PLATE	4040XP-18	689	LCN
1	EA	KICK PLATE	8400 10" X 2" LDW	630	IVE
1	SET	SEALS	328AA	AL	ZER
1	EA	THRESHOLD	65A MSLA-10	AL	ZER
1	EA	CREDENTIAL READER	HOTEL CARD		OWN

Qty		Description	Catalog Number	Finish	Mfr
1	EA	POWER SUPPLY	PS902	LGR	SCE

Hardware Group No. 29

For use on mark/door #(s):
105 202 305
205C 205D 305D

Provide each DE door(s) with the following:

Qty		Description	Catalog Number	Finish	Mfr
6	EA	HINGE	5BB1 4.5 X 4.5	652	IVE
2	EA	FIRE EXIT HARDWARE	9827-EO-F-LBR-499F	626	VON
2	EA	SURFACE CLOSER	1461 RW/PA	689	LCN
2	EA	KICK PLATE	8400 10" X 1 1/2" LDW	630	IVE
2	EA	FIRE/LIFE WALL MAG	SEM7850	689	LCN
1	SET	SEALS	188S	BLK	ZER

Hardware Group No. 30

For use on mark/door #(s):
308A 308B 400A 400B 401
309A 309B

Provide each SGL door(s) with the following:

Qty		Description	Catalog Number	Finish	Mfr
3	EA	HINGE	5BB1 4.5 X 4.5 NRP	630	IVE
1	EA	CLASSROOM LOCK	ND70PD ATH 14-042	626	SCH
1	EA	SURFACE CLOSER	4040XP SCUSH SRI	689	LCN
1	EA	KICK PLATE	8400 10" X 2" LDW	630	IVE
1	EA	RAIN DRIP	142A	AL	ZER
1	SET	SEALS	328AA	AL	ZER
1	EA	THRESHOLD	65A MSLA-10	AL	ZER

Hardware Group No. 31

For use on mark/door #(s):
400C

Provide each SGL door(s) with the following:

Qty		Description	Catalog Number	Finish	Mfr
3	EA	HINGE	5BB1 4.5 X 4.5 NRP	630	IVE

Qty		Description	Catalog Number	Finish	Mfr
1	EA	STOREROOM W/DEADBOLT	L9480P 07A L583-363	626	SCH
1	EA	SURFACE CLOSER	4040XP SRI	689	LCN
1	EA	KICK PLATE	8400 10" X 2" LDW	630	IVE
1	EA	FLOOR STOP	FS439	682	IVE
1	SET	SEALS	328AA	AL	ZER
1	EA	THRESHOLD	65A MSLA-10	AL	ZER

Hardware Group No. 32

For use on mark/door #(s):
G01 G04

Provide each SGL door(s) with the following:

Qty		Description	Catalog Number	Finish	Mfr
1	EA	HINGE	3CB1 4.5 X 4	652	IVE
2	EA	SPRING HINGE	3SP1 4.5 X 4	652	IVE
1	EA	MORTISE LOCK	HOTEL CARD STD	626	OWN
1	EA	DOOR STOP	061	652	IVE
1	EA	WALL STOP	WS404CVX for Door guard	626	IVE
1	SET	SEALS	5075B	BRN	NGP
1	EA	DOOR SHOE	35ET	628	NGP
1	EA	THRESHOLD	413	AL	NGP
1	EA	DOOR GUARD	482	626	IVE
1	EA	DOOR VIEWER	U698	626	IVE

Hardware Group No. 33

For use on mark/door #(s):
G02

Provide each SGL door(s) with the following:

Qty		Description	Catalog Number	Finish	Mfr
3	EA	HINGE	5PB1 4.5 X 4.5	652	IVE
1	EA	PASSAGE SET	AL10S JUP	626	SCH
1	EA	DOOR STOP	061	652	IVE
3	EA	SILENCER	SR64	GRY	IVE

Hardware Group No. 34

For use on mark/door #(s):
G06

Provide each SGL door(s) with the following:

Qty		Description	Catalog Number	Finish	Mfr
3	EA	HINGE	5PB1 4.5 X 4.5	652	IVE
1	EA	PRIVACY LOCK	AL40S JUP	626	SCH
1	EA	OH STOP	450S	689	GLY
3	EA	SILENCER	SR64	GRY	IVE

Hardware Group No. 35

For use on mark/door #(s):
G05 S2B.1 S9B.1
S2B.2 S9B.2

Provide each SGL door(s) with the following:

Qty		Description	Catalog Number	Finish	Mfr
3	EA	HINGE	5BB1 4.5 X 4.5 NRP	630	IVE
1	EA	MORTISE LOCK	HOTEL CARD STD	626	OWN
1	EA	SURFACE CLOSER	1461 RW/PA	689	LCN
1	EA	FLOOR STOP	FS439	682	IVE
1	EA	WALL STOP	WS404CVX for Door guard	626	IVE
1	SET	SEALS	5075B	BRN	NGP
1	EA	THRESHOLD	65A MSLA-10	AL	ZER
1	EA	DOOR GUARD	482	626	IVE
1	EA	DOOR VIEWER	U698	626	IVE

Hardware Group No. 36

For use on mark/door #(s):
G07

Provide each PD door(s) with the following:

Qty		Description	Catalog Number	Finish	Mfr
1	EA	TRACK	PD150N		STA
1	EA	POCKET DOOR LOCK	SD R-161	626	ACC

Hardware Group No. 37

For use on mark/door #(s):
G08

Provide each COM door(s) with the following:

Qty		Description	Catalog Number	Finish	Mfr
6	EA	HINGE	5BB1 4.5 X 4.5	652	IVE
2	EA	EXIT LOCK	AL25D JUP	626	SCH
2	EA	DOOR BOLT	B680	626	SCH
2	EA	WALL STOP	WS407CCV	630	IVE
2	SET	SEALS	5075B	BRN	NGP
2	EA	DOOR SHOE	35ET	628	NGP
1	EA	THRESHOLD	425	AL	NGP

Hardware Group No. 38

For use on mark/door #(s):
G09

Provide each SGL door(s) with the following:

Qty		Description	Catalog Number	Finish	Mfr
3	EA	HINGE	5BB1 4.5 X 4.5 NRP	630	IVE
1	EA	PATIO LOCK	ND30D ATH 14-042	626	SCH
1	EA	OH STOP & HOLDER	90H	630	GLY
1	EA	WALL STOP	WS404CVX	626	IVE
1	SET	SEALS	328AA	AL	ZER
1	EA	THRESHOLD	65A MSLA-10	AL	ZER
1	EA	DOOR GUARD	482	626	IVE

Hardware Group No. 39

For use on mark/door #(s):
G03 G10 G11

Provide each SGL door(s) with the following:

Qty		Description	Catalog Number	Finish	Mfr
3	EA	HINGE	5PB1 4.5 X 4.5	652	IVE
1	EA	PRIVACY LOCK	AL40S JUP	626	SCH
1	EA	DOOR STOP	061	652	IVE
3	EA	SILENCER	SR64	GRY	IVE

End of Section

PRODUCT DATA SHEET

Product Description: Panic exit device, for 28" to 36" wide doors. UL panic rated, ANSI A156.3 Grade 1. Non handed. Rail and push pad are fabricated from heavy gauge steel with a powder coated aluminum finish. Trim available in the following functions: classroom, storeroom, passage and dummy. Device and trim for 161 standard cut out. Mounting hardware and 239 strike included. ADA compliant.

Door Thickness: Standard Doors 1 3/4" to 2 1/4" Cast Iron
Latch Bolt: Stainless Steel 3/4" Throw
Strike: 239 Standard
ANSI/BHMA: Exit Device: A156.3 Grade 1

ANSI ADA WITH MOUNTING HARDWARE

Overall Size: 33" W X 8 1/8" H X 2 1/2" D
Material: Steel, Cast Iron, Stainless Steel
Finish: Powder Coated Aluminum

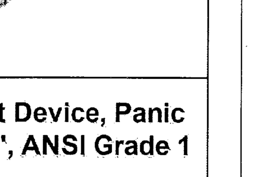

Cross Reference

Manufacturer	Part Number
CAL-ROYAL	2200
CORBIN/RUSSWIN	ED8200
DORMA	8300
VON DUPRIN	22
YALE	2100

Harney HARDWARE

Description: Panic Exit Device, Panic Rated, 36", ANSI Grade 1

Part Number: PE550036PP Date: 06/12 Rev.: 02 Sheet 1 of 1

Hardware Group No. 45

COM 2' 8" X 6' 8" X 1 3/4" X WD X HMF X SMOKE
For use on mark/door #(s):
COMMUNICATING/COMMUNICATING Provide each COM door(s) with the following:

Qty	Description	Catalog Number	Finish	Mfr
6EA	HINGE	3CB1 4.5 X 4.5	652	IVE
2EA	EXIT LOCK	AL25D JUP	626	SCH
2EA	DOOR BOLT	B680	626	SCH
2EA	DOOR STOP	061	652	IVE
2SET	SEALS	188S	BLK	ZER
1SET	SEALS	485A	AL	ZER
1EA	DOOR BOTTOM	321AA	AL	ZER
1EA	THRESHOLD	545A MSLA-10	AL	ZER

Operational Description
Blank plate outside. Inside lever always unlocked.
Deadbolt thrown or retracted by turn unit only. No outside trim. Bolt automatically deadlocks when fully thrown.
Requires 1 1/2" cross bore only. Door range is 1 3/8" - 2 1/2".

Threshold is 5" wide ¼" high flat type

10

APPROVED MIAMI BEACH FIRE DEPARTMENT

HADDON HALL
1500 COLLINS AVE
MIAMI BEACH, FL

KEYPLAN N.T.S.

REVISIONS

NO.	DESCRIPTION	ISSUE DATE
10	MASTER PERMIT COMMENTS	07-03-2014

MTCI
PRIVATE PROVIDER SERVICES, LLC
Construction Plans Review, Inspections, Testing & Consulting

	REVIEWER INITIALS	DATE REVIEWED
BUILDING	EM	11-10-14
STRUCTURAL		
MECHANICAL		
ELECTRICAL		
PLUMBING		
SITE CIVIL		

100% CONSTRUCTION DOCUMENT SET

SEAL
8-4-14
Jonathan Cardello
Lic. # AR93391

ADD Inc Architecture Interiors Planning

One Biscayne Tower
Suite 1670
Two South
Biscayne Boulevard
Miami, Fl 33131
T. 305.482.8700
F. 305.482.8770
www.addinc.com
Lic. # AA26001507

Boston Miami

JOB NUMBER: 13036.00
CHECKED BY:
ISSUE DATE: FEBRUARY 18, 2014
SCALE: REFER TO SHEET

SHEET TITLE

DOOR SCHEDULE

SHEET NUMBER

A192 10

COPYRIGHT ADD INC 2011

Masonite
ARCHITECTURAL DOORSYSTEMS

8/14/14

TRI COUNTY MILLWORK
123 SW 6TH AVE
HOMESTEAD FL 33030
PH 305-389-9145

Jim Hillencamp

This letter is to confirm and show proof that the (250) 32 X 80 X 1-3/4 false louver doors that are being quoted are built in accordance with Bolection's 20 min fire door standard. Please see profile drawing for construction of the product. This is for the below project only.

ORTEGA-JUNEAU CONSTRUCTION
PROJECT HADDON HALL
1500 COLLINS AVE MIAMI BCH FL 33109
PH 305-261-4100

Thank You

Chad Deisher

Masonite Door
11200 69th Street North
Largo, Florida 33773
Local: 727.546.1260

ALGOMA HARDWOODS · Marshfield DOORSYSTEMS · MOHAWK FLUSHDOORS · Baillargeon WOODDOORS

Bolection Door
11200 69th St. N. Largo, Florida 33773

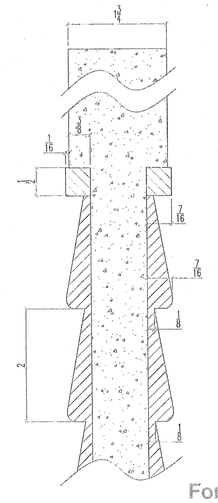

Drawing must be submitted with all orders.

False Louver & Frame will Protrude 1/16" past the face of the door.

For Approval Only
-Due to the hand made process in the production of custom products, some details may vary. Production of this item will not begin until all CAD drawings are signed and returned.
-Door Swing Not Represented In Elevation unless Noted

X _____

Detail Type: 20 Min Fire Door w/Half False Louver		Product Line:	Scale: NTS
Date: 08/14/14	Drawn By: DAB	Checked By:	

S:\Eng\2 Eng Manual\1 VC-8\Sections\VC Louver False 1-75.dwg, 8/15/2014 10:09:13 AM, Dbedier

From: 08/26/2014 14:04 #848 P.001/002

Report prepared for: Spec Direct (Free User) on 8/26/2014 12:57:40 PM

SpecDIRECT POWERED BY marsh

Intertek

LISTING INFORMATION OF Bolection 20 Minute (without hose) Solid MDF Door

SPEC ID: 22814

Bolection Door of Largo, a Division of Marshfield Door Systems, Inc.
11200 69th St N
Largo, FL 33773

This report is for the exclusive use of Intertek's Client and is provided pursuant to the agreement between Intertek and its Client. Intertek's responsibility and liability are limited to the terms and conditions of the agreement. Intertek assumes no liability to any party, other than to the Client in accordance with the agreement, for any loss, expense or damage occasioned by the use of this report. Only the Client is authorized to permit copying or distribution of this report and then only in its entirety. Any use of the Intertek name or one of its marks for the sale or advertisement of the tested material, product or service must first be approved in writing by Intertek. The observations and test results in this report are relevant only to the sample tested. This report by itself does not imply that the material, product, or service is or has ever been under an Intertek certification program.

From: 08/26/2014 14:05 #848 P.002/002

Report prepared for: Spec Direct (Free User) on 8/26/2014 12:57:40 PM

SpecDIRECT POWERED BY marsh

Medium Density Fiberboard (MDF) door for installation in 20 minute (without hose) locations. Category A Door - No additional edge-sealing system required.

MAXIMUM SIZES

SINGLE SWING

Maximum Width: 4'0"
Maximum Height: 8'0"
Minimum Thickness: 1-3/4" ± 1/16"

STANDARD PAIR

Maximum Width: 8'0"
Maximum Height: 8'0"
Minimum Thickness: 1-3/4" ± 1/16"

DOUBLE EGRESS

Not Allowed

Attribute	Value
Criteria	UBC 7-2 (1997)
Criteria	UBC 7-2 (1994)
Criteria	UL 10(b) (1997)
Criteria	UL 10(c) (R2001)
Criteria	NFPA 259 (2003)
Criteria	UL 10(b) Revision 1 (2009)
CSI Code	08 10 00 Doors and Frames
Fire Resistance	20 Min w/out Hose Stream NP
Intertek Services	Certification
Listed or Inspected	LISTED
Listing Section	DOORS
Report Number	3039320-5, File 3045946
Spec ID	22814
Swing	Single Swing
Swing	Standard Pairs

12

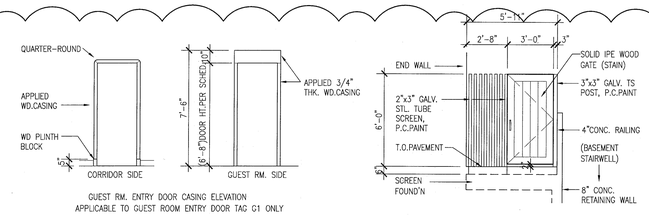

GUEST RM. ENTRY DOOR CASING ELEVATION
APPLICABLE TO GUEST ROOM ENTRY DOOR TAG G1 ONLY

NOTE:
1.ALL GLAZING IN SLIDING AND IN SWING DOORS SHALL BE SAFETY CLASS CATEGORY II AS PER FBC 2411.31.3

GUEST ROOM ENTRY DOOR CASING ELEVATION Scale: 1/4" = 1'-0"

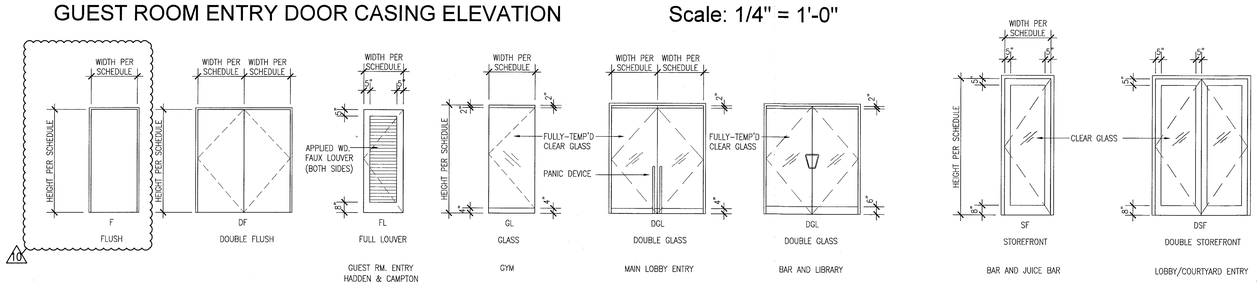

APPROVED MIAMI BEACH FIRE DEPARTMENT

DOOR TYPE ELEVATIONS Scale: 1/4" = 1'-0"

10

18

HADDON HALL
1500 COLLINS AVE
MIAMI BEACH, FL

KEYPLAN N.T.S.

REVISIONS

NO.	DESCRIPTION	ISSUE DATE
1	PROGRESS TO 100% CD	02-18-2014
1B	DOOR-WINDOW COORD.	03-5-2014
10	MASTER PERMIT COMMENTS	07-03-2014
12	FIRE & MTCI PERMIT COMMENTS	08-21-2014

MTCI PRIVATE PROVIDER SERVICES, LLC
Construction Plans Review, Inspections, Testing & Consulting

	REVIEWER INITIALS	DATE REVIEWED
BUILDING	EM	11-10-14
STRUCTURAL		
MECHANICAL		
ELECTRICAL		
PLUMBING		
SITE CIVIL		

100% CONSTRUCTION DOCUMENT SET

SEAL

9.3.14
Jonathan Cardello
Lic. # AR93391

ADD Inc Architecture Interiors Planning

One Biscayne Tower
Suite 1670
Two South
Biscayne Boulevard
Miami, Fl 33131
T. 305.482.8700
F. 305.482.8770
www.addinc.com
Lic. # AA26001507

Boston Miami

JOB NUMBER:	13036.00
CHECKED BY:	
ISSUE DATE:	FEBRUARY 18, 2014
SCALE:	AS NOTED

SHEET TITLE

DOOR & FRAME TYPES & DETAILS

SHEET NUMBER

A196

COPYRIGHT ADD INC 2011

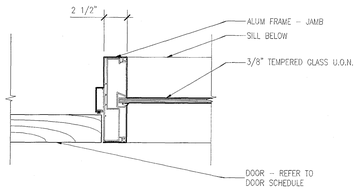

U ALUMINUM FRAME – DOOR JAMB W/GLAZING
SCALE: 3" = 1'-0"

THRESHOLD/FLOOR TRANSITION NOTES

1. CHANGE OF FLOOR FINISH ELEVATION MUST NOT BE GREATER THAN 1/2".
2. THRESHOLDS AT DOORWAYS MUST NOT EXCEED 3/4" IN HEIGHT FOR SLIDING DOORS SERVING UNITS OR 1/2" FOR OTHER DOORS.
3. THRESHOLDS AT EGRESS DOORS MUST COMPLY WITH MEANS OF EGRESS SECTION OF THE CODE, NFPA SECTION 7.2.1.3 AND FAC 2012.

12

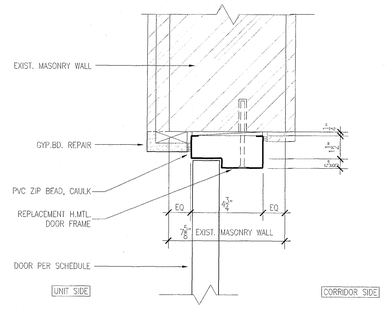

M RETROFIT H.MTL. FRAME AT CMU – JAMB/HEAD
SCALE: 3" = 1'-0"

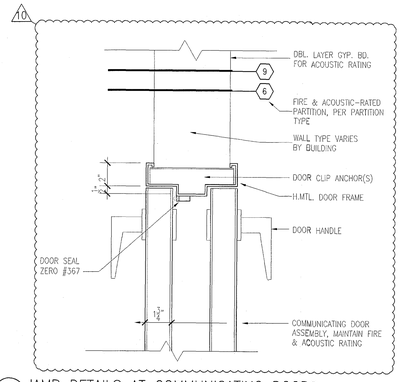

H JAMB DETAILS AT COMMUNICATING DOORS
SCALE: 3" = 1'-0"

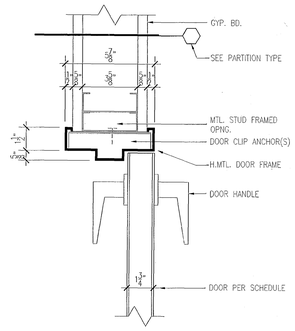

D TYP. HOLLOW METAL FRAME – JAMB (HEAD)
SCALE: 3" = 1'-0"

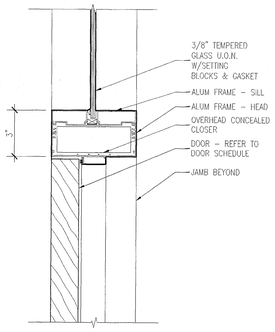

T ALUMINUM FRAME – DOOR HEAD W/GLAZING AND CLOSER
SCALE: 3" = 1'-0"

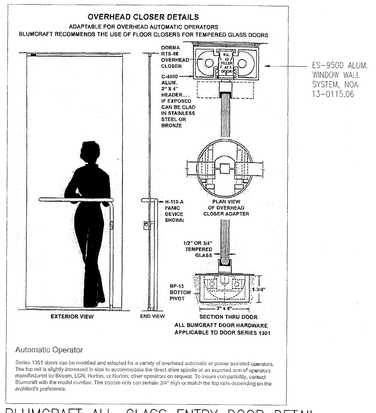

P BLUMCRAFT ALL-GLASS ENTRY DOOR DETAIL
SCALE: 3" = 1'-0"

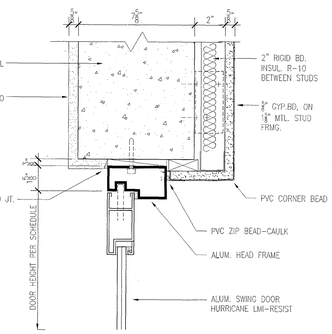

DETAIL REFLECTS R.C.ALUMINUM RD45 OUTSWING DOOR, NOA 12-0410.17

L ALUM. FRAME AT CMU – HEAD
SCALE: 3" = 1'-0"

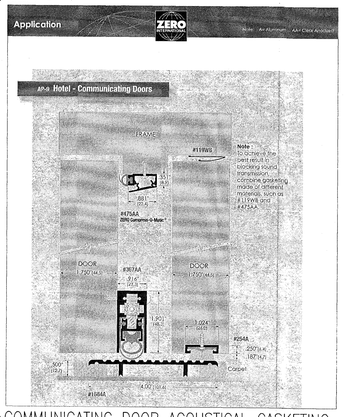

G COMMUNICATING DOOR ACOUSTICAL GASKETING
SCALE: 3" = 1'-0"

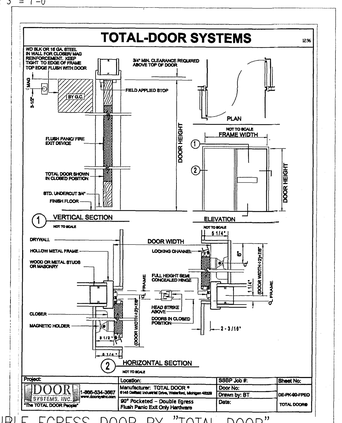

C DOUBLE EGRESS DOOR BY "TOTAL DOOR"
SCALE: N.T.S.

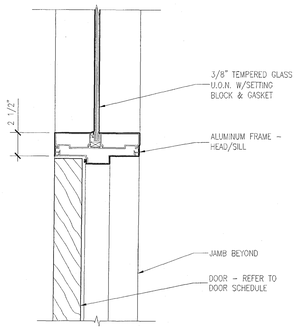

S ALUMINUM FRAME – DOOR HEAD W/GLAZING
SCALE: 3" = 1'-0"

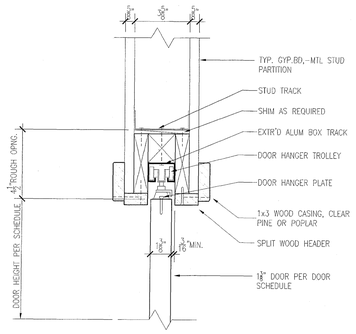

O WOOD POCKET DOOR HEAD TRACK DETAIL
SCALE: 3" = 1'-0"

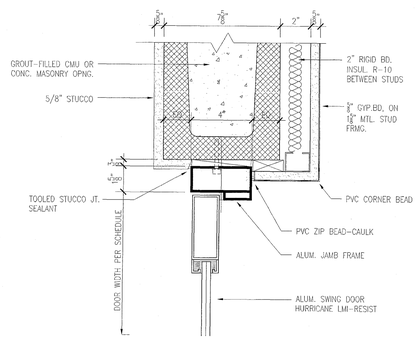

DETAIL REFLECTS R.C.ALUMINUM RD45 OUTSWING DOOR, NOA 12-0410.17

K ALUM. FRAME AT CMU – JAMB
SCALE: 3" = 1'-0"

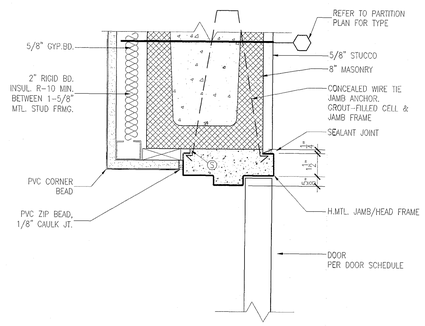

F H.MTL. FRAME AT NEW CMU – JAMB/HEAD
SCALE: 3" = 1'-0"

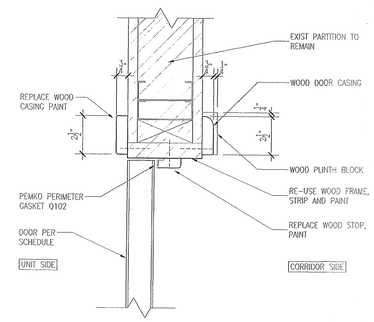

B EXIST. UNITS INTERIOR ENTRY WOOD JAMB (HEAD)
SCALE: 3" = 1'-0"

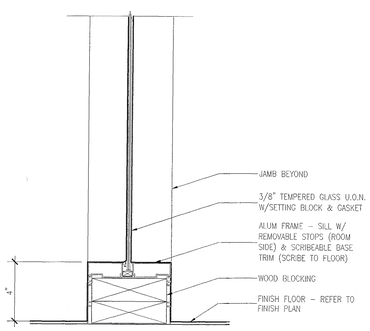

R ALUMINUM FRAME – GLAZING SILL 4" AT FLOOR
SCALE: 3" = 1'-0"

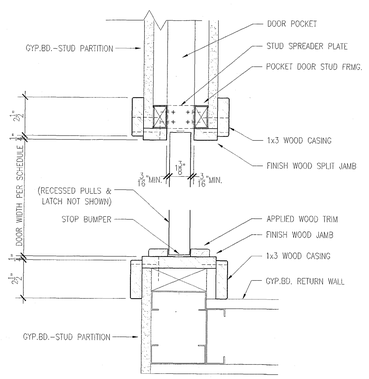

N WOOD POCKET DOOR JAMB DETAIL
SCALE: 3" = 1'-0"

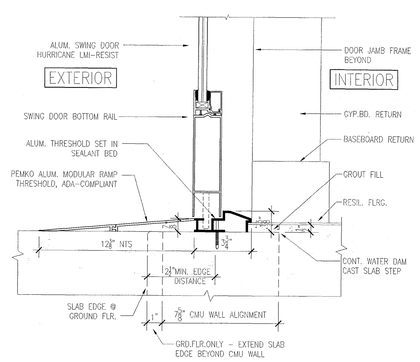

DETAIL REFLECTS R.C.ALUMINUM RD45 OUTSWING DOOR, NOA 12-0410.17

J TYP. ALUM/GL PATIO DOOR ADA-COMPLIANT SILL
SCALE: 3" = 1'-0"

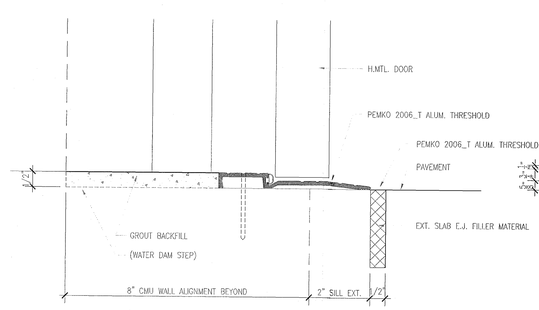

E PEMKO 2006-T DOOR THRESHOLD
SCALE: 6" = 1'-0"

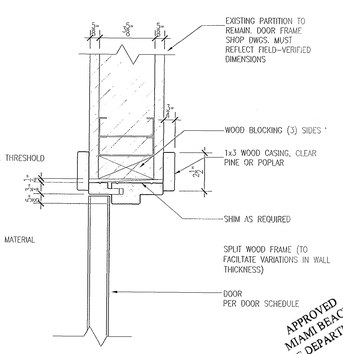

APPROVED MIAMI BEACH FIRE DEPARTMENT

A REPLACEMENT SPLIT WD. DOOR FRAME-JAMB (HEAD)
SCALE: 3" = 1'-0"

HADDON HALL
1500 COLLINS AVE
MIAMI BEACH, FL

KEYPLAN N.T.S.

THIS ENTIRE SHEET HAS BEEN CHANGED

REVISIONS

NO.	DESCRIPTION	ISSUE DATE
1	PROGRESS TO 100% CD	02-18-2014
10	CLARIFICATION TO 100% CD	02-21-2014
18	DOOR-WINDOW COORD.	03-5-2014
10	MASTER PERMIT COMMENTS	07-03-2014
12	FIRE PERMIT COMMENTS	09-29-2014

MTCI
PRIVATE PROVIDER SERVICES, LLC
Construction Plans Review, Inspections, Testing & Consulting

	REVIEWER INITIALS	DATE REVIEWED
BUILDING	EM	11-6-14
STRUCTURAL		
MECHANICAL		
ELECTRICAL		
PLUMBING		
SITE CIVIL		

100% CONSTRUCTION DOCUMENT SET

SEAL

10-9-14
Jonathan Cardello
Lic. # AR93391

ADD Inc Architecture Interiors Planning

One Biscayne Tower
Suite 1670
Two South
Biscayne Boulevard
Miami, Fl 33131
T. 305.482.8700
F. 305.482.8770
www.addinc.com
Lic. # AA26001507

Boston Miami

JOB NUMBER:	13036.00
CHECKED BY:	
ISSUE DATE:	FEBRUARY 18, 2014
SCALE:	AS NOTED

SHEET TITLE

DOOR & FRAME DETAILS

SHEET NUMBER

A197

COPYRIGHT ADD INC 2011

GENERAL NOTES

1. NOTIFY THE ARCHITECT OF ANY UNEXPECTED FIELD CONDITION OR ANY DISCREPANCY BEFORE PROCEEDING. GENERAL CONTRACTOR IS TO COORDINATE THE COMPLETE SCOPE OF WORK WITH CONSTRUCTION DOCUMENTS.
2. NO MAIN FRAMING OR STRUCTURAL MEMBERS ARE TO BE MODIFIED, ALTERED OR CUT WITH OUT THE APPROVAL OF THE ARCHITECT AND BUILDING MANAGEMENT.
3. REVIEW BUILDING STANDARD MANUAL PROVIDED BY THE BUILDING PROPERTY MANAGER BEFORE PROCEEDING WITH WORK.
4. PROVIDE TEMPORARY SECURE ACCESS TO SPACE THROUGH CONSTRUCTION AND TEMPORARY LIGHT & POWER.
5. PROVIDE STRICT CONTROL OF JOB CLEANING AND PREVENT DUST AND DEBRIS FROM EMANATING FROM CONSTRUCTION AREA.
6. DEBRIS REMOVAL MUST BE DONE USING THE FREIGHT ELEVATOR. CONTACT BUILDING MANAGEMENT OFFICE TO OBTAIN SCHEDULE FOR USE OF FREIGHT ELEVATORS PRIOR TO SUBMITTING BID. ALL DEBRIS REMOVAL MUST BE PERFORMED IN ACCORDANCE WITH BUILDING MANAGEMENT REQUIREMENTS AND PROCEDURES. CONTRACTOR TO COORDINATE WITH BUILDING MANAGEMENT TO OBTAIN MOST RECENT REQUIREMENTS FOR DEBRIS REMOVAL.
7. CAP AND SHUT OFF ALL UNUSED UTILITIES PER CITY AND STATE REQUIREMENTS, WHERE REQUIRED.
8. FIRE ALARM DEVICES (SMOKE DETECTORS, HORNS, STROBES AND EXIT SIGNS) WITHIN DEMO SPACE SHALL REMAIN CONNECTED TO EXISTING SYSTEMS. SECURE DEVICES AS NECESSARY TO KEEP FROM HANGING FREELY UPON REMOVAL OF WALLS+CEILINGS.
9. PROTECT ALL BASE BUILDING SERVICES, TYPICAL.
10. ALL REQUIREMENTS FOR FIRE RATINGS TO BE MAINTAINED DURING CONSTRUCTION.
11. THIS PROJECT INVOLVES CONSTRUCTION INSIDE AN EXISTING STRUCTURE. CONTRACTORS, BY SUBMITTING A BID, ARE DEEMED TO BE COMPLETELY FAMILIAR WITH THE EXISTING CONDITION OF THE BUILDING AS IT INFLUENCES THE WORK DESCRIBED. ABSOLUTELY NO CLAIMS FOR EXTRA COMPENSATION WILL BE CONSIDERED FOR EXISTING CONDITIONS VISIBLE OR REASONABLY INFERABLE FROM A CAREFUL EXAMINATION OF THE EXISTING BLDG.
12. ELECTRICAL DEVICES SHALL BE TERMINATED IN A SAFE AND PROPER METHOD BY A LICENSED PROFESSIONAL.
13. ALL MEP-FP DEVICE LOCATIONS NOT SHOWN ON DRAWINGS OR IN CONFLICT WITH MEP-FP DRAWINGS, ARE TO BE COORDINATED WITH ARCHITECT PRIOR TO INSTLLATION.
14. SHUTDOWN OF EXISTING SYSTEMS FOR CONNECTION TO EXISTING SERVICES SHALL BE COORDINATED WITH THE CONSTRUCTION MANAGER AND BUILDING OWNER. THE CONTRACTOR SHALL SUBMIT REQUESTS, WHERE THEY AFFECT THE OPERATION OF THE BUILDING SYSTEMS, AT LEAST ONE WEEK IN ADVANCE OF ANY REQUIRED SHUTDOWN. THE ACTUAL SHUTDOWN PERIOD SHALL BE AS SHORT AS POSSIBLE AND AT A TIME MUTUALLY AGREEABLE TO THE BUILDING OWNER AND THE CONSTRUCTION MANAGER.
15. ALL WORK SHALL COMPLY WITH FEDERAL STATE, AND LOCAL BUILDING CODES
16. G.C. TO COORDINATE ALL AUDIO/VISUAL EQUIPMENT NEEDS WITH CLIENT.
17. BOTTOM OF ALL HANGING FIXTURES TO BE NO LOWER THAN 7'-0" AFF.
18. CONTRACTOR TO PROVIDE OVERLAY DRAWING OF ELECTRICAL FIXTURES, MECH. SYSTEMS AND COMPONENTS, LIFE SAFETY DEVICES, SMOKE DETECTORS, EMERGENCY, LIGHTS AND ANY OTHER DEVICE IN CEILING TO ENSURE NO CONFLICTS.
19. SPRINKLER HEADS SHOWN FOR ARCHITECTURAL DESIGN INTENT ONLY. NOT FOR CODE DISTRIBUTION. SEE FIRE PROTECTION DRAWINGS FOR DISTRIBUTION AND CALCULATIONS.
20. CONTRACTOR WILL NOTIFY ARCHITECT IMMEDIATELY OF ANY CONFLICTS BETWEEN ARCHITECTURE AND ENGINEERING DRAWINGS.
21. THE CONTRACTOR SHALL INSPECT THE EXISTING FIELD CONDITIONS AT THE SITE PRIOR TO THE START OF ANY WORK TO DETERMINE WHAT EFFECT THE EXISTING CONDITIONS WILL HAVE ON HIS WORK. POTENTIAL PROBLEM AREAS SHALL BE BROUGHT TO THE ATTN. OF THE ARCHITECT AND/OR ENGINEER IMMEDIATELY.
22. REFER TO SHEETS E1.00 FOR ELECTRICAL DRAWINGS AND FP SERIES FOR FIRE SPRINGER DRAWINGS

10

SHEET NOTES

1. ALL EXISTING GYPSUM BOARD CEILINGS IN TO BE MAINTAINED AND RESTORED WHERE POSSIBLE. MINIMAL DEMOLITION FOR ADDITION OF NEW HVAC GRILLES AND SOFFITED AREAS.
2. ALL EXISTING LIGHT FIXTURES IN HADDON HALL TO BE REMOVED AND REPLACED IN SAME LOCATION UNLESS OTHERWISE NOTED.
3. FOR HOTEL ROOMS RCPS REFER TO SHEETS A901-918.
4. FOR OUTDOOR AREA LIGHTING REFER TO LANDSCAPE PLANS.
5. EXISTING HISTORIC SOFFIT AREAS IN HADDON HALL GROUND FLOOR COMMON AREA TO BE KEPT AND RESTORED.
6. EXISTING EXPOSED SPRINKLER PIPES IN HADDON HALL BUILDING TO BE COVERED WITH NEW PERIMETER SOFFIT AREA AT ALL CORRIDORS.
7. CENTER LIGHT FIXTURE IN SPACE U.O.N.
8. REFER TO A-281 FOR LIGHTING FIXTURE SCHEDULE.
9. J-BOX FOR FUTURE LED BACKLIGHT FOR TUBE SCREEN
10. COORDINATE LOCATION OF HANGING CHAIR WITH DESIGNER PRIOR TO INSTALLATION. ADDITIONAL BLOCKING MAY BE REQUIRED.
11. ALL GENERAL CEILINGS AND SOFFITS TO BE PAINTED PT-07 (FLAT FINISH), U.O.N. ALL GUESTROOM AND PUBLIC RESTROOMS CEILING TO BE PAINTED PT-01 (EGGSHELL FINISH).
12. LED STRIP LIGHTING SHOWN ON PLAN WITH NOTE AS PLUG-IN RECEPTACLE AT ALL.
13. ALL LIGHT FIXTURES IN CAMPTON APARTMENTS AND POOL SUITES TO BE NEW AND CENTERED IN SPACE U.O.N.
14. WALL SCONCES SHOWN ON PLAN. ALL WALL CONCES IN HADDON HALL GUESTROOMS WILL REPLACE EXISTING IN SAME LOCATION. ALL SCONCES IN CAMPTON AND POOL SUITES NEW. REFER TO GUESTROOM ELEVATIONS FOR SCONCE HEIGHT.
15. 1"x4" MOUNTED TO CEILING IN FRONT OF WINDOWS TO ACT AS VALANCE TO CONCEAL DRAPERY ROD. 1x4 TO BE PAINTED PT-07. SIZES VARY, VERIFY IN FIELD.

LEGEND

GWB CEILING/SOFFIT	BATTERY POWERED WALL MOUNTED
CEILING HEIGHT KEY / CEILING TYPE	LINEAR DIFFUSER
CEILING HEIGHT – AFF	OCCUPANCY SENSOR
1' X 4' PENDANT	EXIT SIGN ARROWS INDICATE DIRECTION
DOWNLIGHT	EXIT SIGN – WALL MOUNTED ARROWS INDICATE DIRECTION
LED STRIP LIGHT	SMOKE DETECTOR CEILING MOUNTED
EXTERIOR/DECORATIVE SCONCE	SMOKE DETECTOR WALL MOUNTED
PENDANT FIXTURE	EXISTING CEILING MOUNTED SPRINKLER
SURFACE MOUNTED FIXTURE	SPRINKLER
WALL SCONCE	EXISTING WALL MOUNTED SPRINKLER
EXISTING FIXTURE TO BE REPLACED WITH NEW FIXTURE IN SAME LOCATION	SUPPLY DIFFUSER
DEMO FIXTURE – PATCH AND REPAIR CEILING	RETURN AIR GRILLE
N NEW LIGHT FIXTURE	R REPLACE EXISTING FIXTURE WITH NEW LIGHT FIXTURE
D DEMO LIGHT FIXTURE	JUNCTION BOX

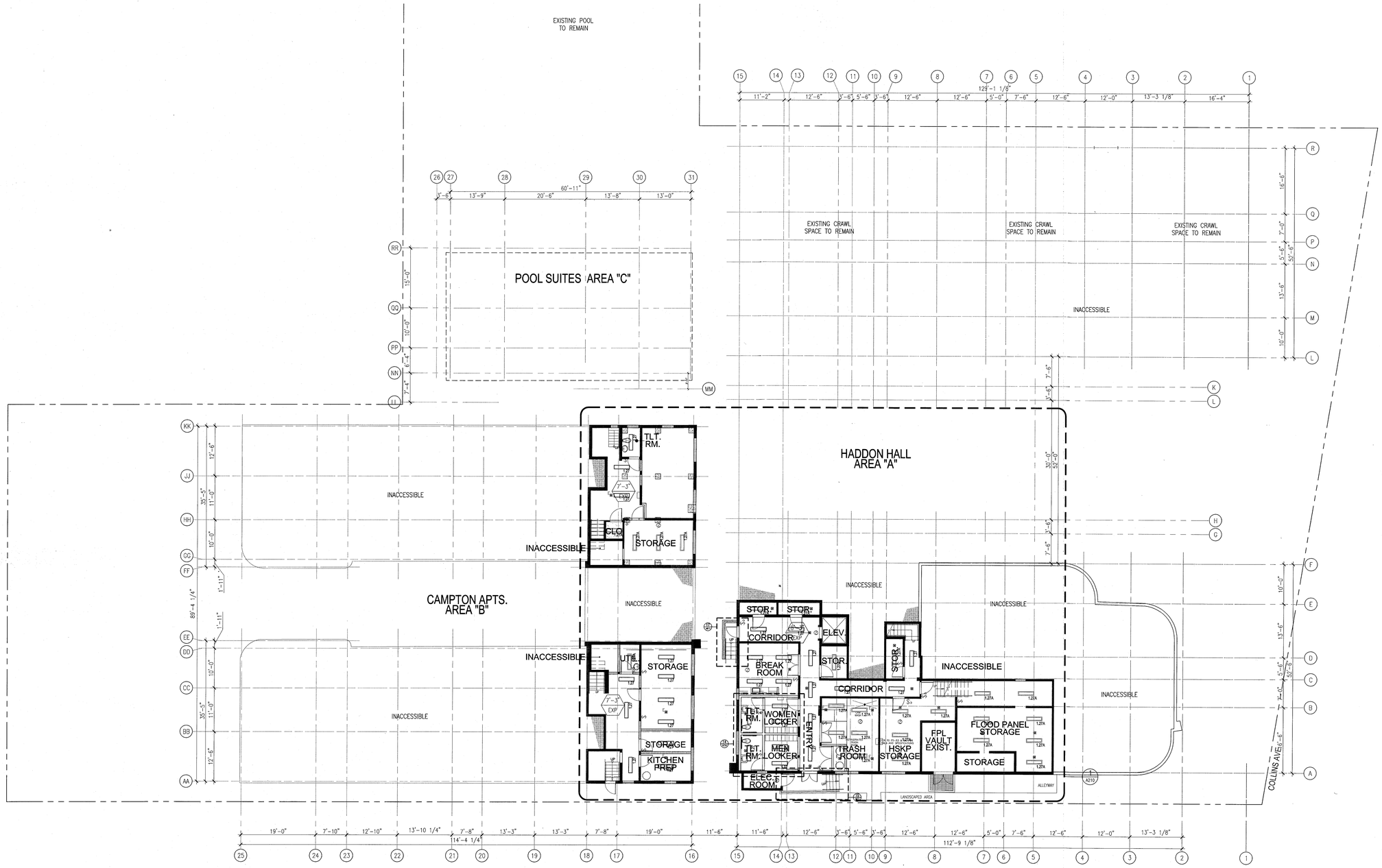

1 OVERALL BASEMENT REFLECTED CEILING PLAN/HADDON HALL
SCALE: 3/32" = 1'-0"

HADDON HALL
1500 COLLINS AVE
MIAMI BEACH, FL

KEYPLAN N.T.S.

REVISIONS

NO.	DESCRIPTION	ISSUE DATE
10	MASTER PERMIT COMMENTS	07-03-2014

MTCI
PRIVATE PROVIDER SERVICES, LLC
Construction Plans Review, Inspections, Testing & Consulting

	REVIEWER INITIALS	DATE REVIEWED
BUILDING	EM	11-10-14
STRUCTURAL		
MECHANICAL		
ELECTRICAL		
PLUMBING		
SITE CIVIL		

100% CONSTRUCTION DOCUMENT SET

NORTH SEAL

8-4-14
Jonathan Cardello
Lic. # AR93391

ADD Inc Architecture Interiors Planning

One Biscayne Tower
Suite 1670
Two South
Biscayne Boulevard
Miami, Fl 33131
T. 305.482.8700
F. 305.482.8770
www.addinc.com
Lic. # AA26001507

Boston Miami

JOB NUMBER:	13036.00
CHECKED BY:	
ISSUE DATE:	FEBRUARY 18, 2014
SCALE:	3/32" = 1'-0"

SHEET TITLE

BASEMENT FLOOR REFLECTED CEILING PLAN

SHEET NUMBER

A200

COPYRIGHT ADD INC 2011

APPROVED MIAMI BEACH FIRE DEPARTMENT