ADDON [illegible]

1500 COLLINS AVE | MIAMI BEACH, FL 33139

CLIENT
ROCKWOOD CAPITAL LLC

ADD Inc | Architecture Interiors Planning

One Biscayne Tower
Suite 1670
Two South
Biscayne Boulevard
Miami, Fl 33131
T. 305.482.8700
F. 305.482.8770
www.addinc.com

Jonathan Cardello
Lic.#AA26001507

Boston Miami

Contact: Jonathan Cardello PH: 305.482.8700

INTERIOR DESIGNERS
ROBERT MCKINLEY CREATIVE SERVICES
65 Bank Street - Office 1
New York, NY 10014

Contact: Robert McKinley PH: 917.549.0111

GENERAL CONTRACTOR
ORTEGA JUNEAU
Miami, FL

Contact: Michael Ortega PH: 305.438.7666

MEP/FP
STEVEN FELLER P.E., P.L.
500 NE 3rd Avenue
Fort Lauderdale, FL 33301

Contact: Steven Feller PH: 954.467.1402

STRUCTURE
ONM&J
321 LA Kirksey Street, Suite 200
West Palm Beach, FL 33401

Contact: Dwayne Jackson PH: 561.835.9994

CIVIL
COASTAL INTERNATIONAL SYSTEMS, INC.
464 South Dixie Highway
Coral Gables, FL 33146

Contact: Christy Brush PH: 305.661.3655

LANDSCAPE
SAVINO & MILLER
12345 NE 6th Ave
North Miami, FL 33161

Contact: Barry Miller PH: 305.895.9082

FIRE PROTECTION/LIFE SAFETY
SLS
1825 Ponce de Leon Blvd. Ste 565
Coral Gables, FL 33134

Contact: Michael Sheehan PH: 786.536.7611

SURVEYOR
SCHWEBKE-SHISKIN & ASSOCIATES, INC.
3240 Corporate Way
Miramar, FL 33025

Contact: Jose G. Hernandez PH: 305.652.7010

LEGAL CONSULTANT
BERCOW RADELL & FERNANDEZ
200 Southeast Financial Center
200 S. Biscayne Boulevard, Suite 850
Miami, FL 33131

Conte[illegible]ra Entin

DERM
PLAN REVIEW
FINAL
APPROVAL
DEPARTMENT OF ENVIRONMENTAL RESOURCES MANAGEMENT
CORE REVIEWER (PRINT) [illegible] DATE [illegible]-14
SIGNATURE

PUBLIC WORKS
PLAN REVIEW NOTICE
Phone 305-673-7080 Fax 305-673-7028

THIS PLAN REVIEW CONSTITUTES APPROVAL FOR OBTAINING BUILDING PERMITS ONLY.

All construction and/or use of equipment in the right-of-way and/or easements, requires a separate Public Works Department permit prior to start of construction.

Permit Requirements: Proof of existing sidewalk/swale area conditions (pictures) and/or posting of sidewalk/roadway bonds (Public Works Inspection of the right-of-way will be required prior to final sign-off on the C.C./C.O., or the release of bonds.)

Approved/Reviewed By: [illegible] Date: 8/13/14

Derm Number: 2014-0408-1358-2076
Contact Name: DAMIAN GALLO
Contact Phone: (305)522-5215
Folio: 02-3234-019-1191
Project Name: HADDON HALL
Date Received: 04/08/2014

MTCI
PRIVATE PROVIDER SERVICES, LLC
Construction Plans Review - Code Compliance, Permitting & Consulting

	REVIEWER INITIALS	DATE REVIEWED
BUILDING	EM	11-12-14
STRUCTURAL		
MECHANICAL		
ELECTRICAL		
PLUMBING		
SITE CIVIL		

Approved with the Conditions [illegible]

OFFICE COPY
CITY OF MIAMI BEACH
APPROVED FOR PERMIT BY THE FOLLOWING:

BUILDING:	
ZONING:	11/14/14
PLUMBING:	
ELECTRICAL:	
MECHANICAL:	
FIRE PREVENTION:	[illegible] 10/28/14
FLOOD:	[illegible] 11/14/14
PUBLIC WORKS:	8/13/14
STRUCTURAL:	
ELEVATOR:	

11/14/14
for UVF

ROAD X FIRE X SCHOOL
IMPACT FEE PAID
APR 25 2014
MIAMI-DADE COUNTY
APPROVED

APPROVED
MIAMI BEACH
FIRE DEPARTMENT

NOTICE: In addition to the requirement of this permit, there may be additional restrictions applicable to this property that may be found in the Public Records of Miami-Dade County, and there may be additional permits required from other governmental entities such as Water Management District, State, Federal or Local Agencies, or Homeowners Associations. It is the responsibility of the owner to ascertain and comply with all applicable requirements.

PERMIT SET
JANUARY [illegible] 2014

CFN 2014R0222936
OR Bk 29085 Pgs 1764 - 1768; (5pgs)
RECORDED 03/27/2014 14:24:59
HARVEY RUVIN, CLERK OF COURT
MIAMI-DADE COUNTY, FLORIDA

HISTORIC PRESERVATION BOARD
City of Miami Beach, Florida

MEETING DATE: March 11, 2014

CERTIFICATION
THIS IS TO CERTIFY THAT THE ATTACHED DOCUMENT IS A TRUE AND ACCURATE COPY OF THE ORIGINAL ON FILE IN THE OFFICE OF THE PLANNING DEPARTMENT. CITY OF MIAMI BEACH
3-17-2014
(Signature of Planning Director or Designee) (Date)
Personally known to me or Produced ID:
Notary Public, State of Florida at Large
Printed Name: Waldhys J. Rodoli
My Commission Expires: (Seal)
This document contains 5 pages.

WALDHYS J. RODOLI
MY COMMISSION # FF039521
EXPIRES: JUL 24, 2017
Bonded through 1st State Insurance

FILE NO: 7390

PROPERTY: 1500 Collins Avenue and 1455 Washington Avenue

LEGAL: Parcel 1: Lots 1 and 2 of block 76 of Fisher's First Subdivision of Alton Beach, according to the plat thereof recorded in plat book 2, at page 77 of the public records of Dade County, Florida, and also the following described land: that part of vacated Fifteenth Street formerly known as Avenue D.

Parcel 2: Commencing at the northwest corner of lot 5, block 76 of Fisher's First Subdivision of Alton Beach, as same is shown upon a recorded plat of said subdivision, recorded in plat book 2, at page 77, of the Public Records of Dade County, Florida: thence run east along the north line of said block 76, a distance of 100 feet to the point of beginning of the tract of land herein described.

Parcel 3: Lots 3, 4 and 5, in block 76, of Fisher's First Subdivision of Alton Beach, according to the plat thereof as recorded in plat book 2, at page 77 of the public records of Dade County, Florida.

IN RE: The application for a Certificate of Appropriateness for the partial demolition and renovation, restoration of the existing 3-story hotel, including a partial 1-story rooftop addition, the partial demolition and renovation of an existing 2-story non-contributing structure, including a 1-story rooftop addition and the partial demolition, renovation and restoration of the existing 2-story Campton Apartments, and as part of a new hotel development. (The application was approved on January 14, 2014 with the exception of the design of the front yard of the Campton Apartments building and the design of the exterior corridors.)

SUPPLEMENTAL ORDER

The applicant, Haddon Hall Hotel Owner, LLC, filed an application with the City of Miami Beach Planning Department for a Certificate of Appropriateness.

The City of Miami Beach Historic Preservation Board makes the following FINDINGS OF FACT, based upon the evidence, information, testimony and materials presented at the public hearing and which are part of the record for this matter:

A. The structure located on Parcel 1 is classified as 'Contributing' in the Miami Beach Historic Properties Database and is located within the Ocean Drive/Collins Avenue Local Historic District.

B. The structure located on Parcel 2 is classified as 'Non Contributing' in the Miami Beach Historic Properties Database and is located within the Ocean Drive/Collins Avenue Local Historic District.

C. The structure located on Parcel 3 classified as 'Contributing' in the Miami Beach Historic Properties Database and is located within the Flamingo Park Local Historic District.

D. The subject Certificate of Appropriateness was approved by the Historic Preservation Board on January 14, 2014, with the exception of the design for Washington Avenue yard.

E. Based on the plans and documents submitted with the application, testimony and information provided by the applicant, and the reasons set forth in the Planning Department Staff Report, the project as submitted is consistent with the Certificate of Appropriateness Criteria in Section 118-564(a)(1) of the Miami Beach Code, is not consistent with Certificate of Appropriateness Criteria 'b' in Section 118-564(a)(2) of the Miami Beach Code, is not consistent with Certificate of Appropriateness Criteria 'a', 'c', 'e' & 'h' in Section 118-564(a)(3) of the Miami Beach Code, and is consistent with Certificate of Appropriateness Criteria for Demolition in Section 118-564(f)(4) of the Miami Beach Code.

F. The project would be consistent with the criteria and requirements of section 118-564 if the following conditions are met:

1. Revised elevation, site plan and floor plan drawings shall be submitted to and approved by staff; at a minimum, such drawings shall incorporate the following:

   a. Final design and details of the proposed front yard of the Campton Apartment Building shall be submitted, in a manner to be reviewed and approved by staff consistent with the Certificate of Appropriateness Criteria and/or the directions from the Board.

   b. The paving proposed for the front yard of the Campton Apartment Building shall consist of a natural stone in a random ashlar pattern, or similar pattern more consistent with the front yard of the Haddon Hall Hotel, in a manner to be reviewed and approved by staff consistent with the Certificate of Appropriateness Criteria and/or the directions from the Board.

   c. The design for the central walkway within the Washington Avenue yard shall be further developed in a manner more consistent with the central walkway within the Collins Avenue yard, in a manner to be reviewed and approved by staff consistent

with the Certificate of Appropriateness Criteria and/or the directions from the Board.

   d. The design for the site wall and fence along Washington Avenue shall be further developed and simplified, in a manner to be reviewed and approved by staff consistent with the Certificate of Appropriateness Criteria and/or the directions from the Board.

   e. The central entrance gate feature along Washington Avenue shall be further emphasized and setback from the sidewalk, in a manner to be reviewed and approved by staff consistent with the Certificate of Appropriateness Criteria and/or the directions from the Board.

   f. Final design, details, materials and finishes of the proposed site wall/fence located along Washington Avenue shall be submitted and the fence shall have a maximum height of 6'-0" with the exception of the central entrance arch which may be taller, in a manner to be reviewed and approved by staff consistent with the Certificate of Appropriateness Criteria and/or the directions from the Board.

   g. Final design and details of the proposed gates located along Washington Avenue shall be submitted, in a manner to be reviewed and approved by staff consistent with the Certificate of Appropriateness Criteria and/or the directions from the Board.

   h. A sample of the proposed recycled concrete/coquina material shall be provided and shall consist of a light, natural color, in a manner to be reviewed and approved by staff consistent with the Certificate of Appropriateness Criteria and/or the directions from the Board.

   i. A copy of all pages of the recorded Final Order shall be scanned into the plans submitted for building permit, and shall be located immediately after the front cover page of the permit plans.

2. A revised landscape plan, prepared by a Professional Landscape Architect, registered in the State of Florida, and corresponding site plan, shall be submitted to and approved by staff. The species type, quantity, dimensions, spacing, location and overall height of all plant material shall be clearly delineated and subject to the review and approval of staff. At a minimum, such plan shall incorporate the following:

   a. Final design, details and species of the proposed landscaping for the Campton Apartment building front yard shall be submitted, in a manner to be reviewed and approved by staff consistent with the Certificate of Appropriateness Criteria and/or the directions from the Board.

3. The Supplemental Final Order shall be recorded in the Public Records of Miami-Dade County, prior to the issuance of a Building Permit.

4. The previous Final Order dated January 14, 2014 shall remain in full force and effect.

5. The Supplemental Final Order is not severable, and if any provision or condition hereof is held void or unconstitutional in a final decision by a court of competent jurisdiction, the order shall be returned to the Board for reconsideration as to whether the order meets the criteria for approval absent the stricken provision or condition, and/or it is appropriate to modify the remaining conditions or impose new conditions.

6. The conditions of approval herein are binding on the applicant, the property's owners, operators, and all successors in interest and assigns.

7. Nothing in this order authorizes a violation of the City Code or other applicable law, nor allows a relaxation of any requirement or standard set forth in the City Code.

IT IS HEREBY ORDERED, based upon the foregoing findings of fact, the evidence, information, testimony and materials presented at the public hearing, which are part of the record for this matter, and the staff report and analysis, which are adopted herein, including the staff recommendations, which were amended by the Board, that the Certificate of Appropriateness is GRANTED for the above-referenced project subject to those certain conditions specified in paragraph C of the Findings of Fact (Condition Nos. 1-7 inclusive) hereof, to which the applicant has agreed.

PROVIDED, the applicant shall build substantially in accordance with the plans approved by the Historic Preservation Board, as determined by staff, "The Haddon Hall & Campton Apartments - Renovation", as prepared by ADD Inc., dated February 18, 2014.

When requesting a building permit, the plans submitted to the Building Department for permit shall be consistent with the plans approved by the Board, modified in accordance with the conditions set forth in this Final Order. No building permit may be issued unless and until all conditions of approval that must be satisfied prior to permit issuance, as set forth in this Final Order, have been met.

The issuance of this Certificate of Appropriateness does not relieve the applicant from obtaining all other required Municipal, County and/or State reviews and permits, including final zoning approval. If adequate handicapped access is not provided on the Board-approved plans, this approval does not mean that such handicapped access is not required. When requesting a building permit, the plans submitted to the Building Department for permit shall be consistent with the plans approved by the Board, modified in accordance with the conditions set forth in this Order.

If the Full Building Permit for the project is not issued within eighteen (18) months of the meeting date at which the original Certificate of Appropriateness was granted, this Certificate of Appropriateness will expire and become null and void. If the Full Building Permit for the project should expire for any reason (including but not limited to construction not commencing and continuing, with required inspections, in accordance with the applicable Building Code), this Certificate of Appropriateness will expire and become null and void.

In accordance with Section 118-561 of the City Code, the violation of any conditions and safeguards that are a part of this Order shall be deemed a violation of the land development regulations of the City Code. Failure to comply with this **Order** shall subject this Certificate of

OR BK 29085 PG 1768
LAST PAGE

Appropriateness to Section 118-564, City Code, for revocation or modification of the Certificate of Appropriateness.

Dated this 14th day of March, 2014

HISTORIC PRESERVATION BOARD
THE CITY OF MIAMI BEACH, FLORIDA

BY: ______
THOMAS R. MOONEY, AICP
ACTING PLANNING DIRECTOR
FOR THE CHAIR

STATE OF FLORIDA)
)SS
COUNTY OF MIAMI-DADE)

The foregoing instrument was acknowledged before me this 14th day of March 2014 by Thomas R. Mooney, Acting Planning Director, Planning Department, City of Miami Beach, Florida, a Florida Municipal Corporation, on behalf of the corporation. He is personally known to me.

WALDHYS J. RODOLI
MY COMMISSION # FF039521
EXPIRES: JUL 24, 2017
Bonded through 1st State Insurance

NOTARY PUBLIC
Miami-Dade County, Florida
My commission expires: 7-24-17

Approved As To Form:
City Attorney's Office: ______ (3-13-14)

Filed with the Clerk of the Historic Preservation Board on 3-14-14 (WJR)

F:\PLAN\$HPB\14HPB\Mar14\7390-Mar14.FO.docx

CFN 2014R0136544
OR Bk 29041 Pgs 2740 - 2748; (9pgs)
RECORDED 02/24/2014 11:01:10
HARVEY RUVIN, CLERK OF COURT
MIAMI-DADE COUNTY, FLORIDA

HISTORIC PRESERVATION BOARD
City of Miami Beach, Florida

MEETING DATE: January 14, 2014

CERTIFICATION
THIS IS TO CERTIFY THAT THE ATTACHED DOCUMENT IS A TRUE AND ACCURATE COPY OF THE ORIGINAL ON FILE IN THE OFFICE OF THE PLANNING DEPARTMENT. CITY OF MIAMI BEACH
1-31-14
(Signature of Planning Director or Designee) (Date)
Personally known to me or Produced ID:
Notary Public, State of Florida at Large
Printed Name: Waldhys J. Rodoli
My Commission Expires: (Seal)
This document contains 9 pages.

WALDHYS J. RODOLI
MY COMMISSION # FF039521
EXPIRES: JUL 24, 2017
Bonded through 1st State Insurance

FILE NO: 7390

PROPERTY: 1500 Collins Avenue and 1455 Washington Avenue

LEGAL: Parcel 1: Lots 1 and 2 of block 76 of Fisher's First Subdivision of Alton Beach, according to the plat thereof recorded in plat book 2, at page 77 of the public records of Dade County, Florida, and also the following described land: that part of vacated Fifteenth Street formerly known as Avenue D.

Parcel 2: Commencing at the northwest corner of lot 5, block 76 of Fisher's First Subdivision of Alton Beach, as same is shown upon a recorded plat of said subdivision, recorded in plat book 2, at page 77, of the Public Records of Dade County, Florida: thence run east along the north line of said block 76, a distance of 100 feet to the point of beginning of the tract of land herein described.

Parcel 3: Lots 3, 4 and 5, in block 76, of Fisher's First Subdivision of Alton Beach, according to the plat thereof as recorded in plat book 2, at page 77 of the public records of Dade County, Florida.

IN RE: The application for a Certificate of Appropriateness for the partial demolition and renovation, restoration of the existing 3-story hotel, including a partial 1-story rooftop addition, the partial demolition and renovation of an existing 2-story non-contributing structure, including a 1-story rooftop addition and the partial demolition, renovation and restoration of the existing 2-story Campton Apartments, and as part of a new hotel development.

ORDER

The applicant, Haddon Hall Hotel Owner, LLC, filed an application with the City of Miami Beach Planning Department for a Certificate of Appropriateness.

The City of Miami Beach Historic Preservation Board makes the following FINDINGS OF FACT, based upon the evidence, information, testimony and materials presented at the public hearing and which are part of the record for this matter:

A. The structure located on Parcel 1 is classified as 'Contributing' in the Miami Beach Historic Properties Database and is located within the Ocean Drive/Collins Avenue Local Historic District.

B. The structure located on Parcel 2 is classified as 'Non Contributing' in the Miami Beach Historic Properties Database and is located within the Ocean Drive/Collins Avenue Local Historic District.

C. The structure located on Parcel 3 classified as 'Contributing' in the Miami Beach Historic Properties Database and is located within the Flamingo Park Local Historic District.

D. Based on the plans and documents submitted with the application, testimony and information provided by the applicant, and the reasons set forth in the Planning Department Staff Report, the project as submitted is consistent with the Certificate of Appropriateness Criteria in Section 118-564(a)(1) of the Miami Beach Code, is not consistent with Certificate of Appropriateness Criteria 'a' & 'b' in Section 118-564(a)(2) of the Miami Beach Code, is not consistent with Certificate of Appropriateness Criteria 'b' & 'h' in Section 118-564(a)(3) of the Miami Beach Code, and is consistent with Certificate of Appropriateness Criteria for Demolition in Section 118-564(f)(4) of the Miami Beach Code.

E. The project would be consistent with the criteria and requirements of section 118-564 if the following conditions are met:

1. Revised elevation, site plan and floor plan drawings shall be submitted to and approved by staff; at a minimum, such drawings shall incorporate the following:

   a. The Campton Apartments front lawn shall be further studied and developed, in a manner to be reviewed and approved by the Board.

   b. The design of the exterior corridors shall be further studied and developed, in a manner to be reviewed and approved by the Board.

   c. Final details of all hardscape materials including material samples shall be submitted and shall consist of a high quality keystone or similar material, in a manner to be reviewed and approved by staff consistent with the Certificate of Appropriateness Criteria and/or the directions from the Board.

   d. The design of all hardscape shall be consistent with the plan shown on sheet B-2, in a manner to be reviewed and approved by staff consistent with the Certificate of Appropriateness Criteria and/or the directions from the Board.

   e. The fountain located within the front yard of the Haddon Hall Hotel shall be restored, in a manner to be reviewed and approved by staff consistent with the Certificate of Appropriateness Criteria and/or the directions from the Board.

   f. The existing north pylon shall be fully restored and the missing south pylon and the original lanterns atop each of the two pylons shall be recreated, in a manner to be reviewed and approved by staff consistent with the Certificate of Appropriateness Criteria and/or the directions from the Board.

   g. The vertical neon lighting at the eastern side of the Haddon Hall Hotel shall be fully restored, in a manner to be reviewed and approved by staff consistent with the Certificate of Appropriateness Criteria and/or the directions from the Board.

   h. The mechanical equipment and mechanical screening on the rooftop of the Haddon Hall shall be setback a minimum of 10'-0" from the eastern parapet wall, in a manner to be reviewed and approved by staff consistent with the Certificate of Appropriateness Criteria and/or the directions from the Board.

   i. The final location and details of all exterior ramp and railings systems, including materials, dimensions and finishes, shall be provided in a manner to be reviewed and approved by staff consistent with the Certificate of Appropriateness Criteria and/or the directions from the Board.

   j. The design of the metal grilles at the parapet walls of the Haddon Hall Hotel shall be further refined in a manner more consistent with historic documentation, in a manner to be reviewed and approved by staff consistent with the Certificate of Appropriateness Criteria and/or the directions from the Board.

   k. Final design and details including material samples for the proposed property wall located along Washington Avenue shall be provided, in a manner to be reviewed and approved by staff consistent with the Certificate of Appropriateness Criteria and/or the directions from the Board.

   l. All new exterior windows and doors shall match the original window and door configurations and detailing to the greatest extent possible, including corner windows; no corner door shall be permitted adjacent to the central terrace; such door shall be relocated at the east end of the corner window, in a manner to be reviewed and approved by staff consistent with the Certificate of Appropriateness Criteria and/or the directions from the Board.

   m. Final details of all exterior surface finishes and materials shall be required, in a manner to be reviewed and approved by staff consistent with the Certificate of Appropriateness Criteria and/or the directions from the Board.

   n. Manufacturers drawings and Dade County product approval numbers for all new windows, doors and glass shall be required and all new proposed windows shall substantially match the original window configurations, in a manner to be reviewed and approved by staff, in a manner to be reviewed and approved by staff consistent with the Certificate of Appropriateness Criteria and/or the directions from the Board.

   o. The final design and details of all exterior lighting shall be provided, in a manner to be reviewed and approved by staff consistent with the Certificate of Appropriateness Criteria and/or the directions from the Board. Interior lighting shall be designed in a manner to not have an adverse overwhelming impact upon the historic hotel or the surrounding historic district.

   p. All roof-top fixtures, air-conditioning units and mechanical devices shall be clearly noted on a revised roof plan and elevation drawings and shall be screened from view, and all kitchen exhaust ducting shall be contained within the building from the first floor through to the roof, in a manner to be reviewed and approved by staff, consistent with the Certificate of Appropriateness Criteria and/or the directions from the Board. Any rooftop mechanical equipment, structures or screening not shown on the plans approved by the Board may require later Board approval.

   q. A museum quality historic analysis and display of the existing structure, inclusive of a photographic and written description of the history and evolution of the original building and its changes of use over time, shall be submitted to and approved by staff, prior to the issuance of a Certificate of Occupancy or a Temporary Certificate of Occupancy; such historic analysis shall be displayed prominently within the public area of the historic structure, in a location to be determined by staff.

   r. The applicant shall verify, prior to the issuance of a Building Permit, the exact location of all applicable FPL transformers or vault rooms; such transformers and vault rooms, and all other related devices and fixtures, shall not be permitted within any required yard or any area fronting a street or sidewalk. The location of any exterior transformers, and how they are screened with landscape material from the right-of-way, shall be clearly indicated on the site and landscape plans, in a manner to be reviewed and approved by staff consistent with the Certificate of Appropriateness Criteria and/or the directions from the Board.

   s. Prior to the issuance of a Certificate of Occupancy, the Architect for the project architect shall verify, in writing, that the project is consistent with the elevations, floor plans, site plan and landscape plans approved by the Planning Department for Building Permit.

2. In accordance with Section 118-564(f)(6) of the City Code, the requirement that a full building permit for the new construction be issued prior to the issuance of a demolition permit for the existing noncontributing structures, is hereby waived.

3. A revised landscape plan, prepared by a Professional Landscape Architect, registered in the State of Florida, and corresponding site plan, shall be submitted to and approved by staff. The species type, quantity, dimensions, spacing, location and overall height of all plant material shall be clearly delineated and subject to the review and approval of staff. At a minimum, such plan shall incorporate the following:

   a. The locations of palms on the Haddon Hall property facing Collins Avenue shall be further studied and relocated in a manner more consistent with the symmetry of the original landscaping to enhance and reveal rather that conceal the strong original symmetry of the Haddon Hall architecture, in a manner to be reviewed and approved by staff consistent with the Certificate of Appropriateness Criteria and/or the directions from the Board.

   b. The proposed wall/fence in front of the Campton Apartments shall be further studied and developed, in a manner to be reviewed and approved by the Board.

   c. The following conditions shall not supersede the Florida Department of Transportation plans approved and currently under construction for Collins Avenue from 5th Street to Lincoln Road.

   d. Street trees shall be required along Collins Avenue and Washington Avenue, placed with a minimum 36" clear space between the tree trunk and the back of curb, in a manner to be reviewed and approved by staff consistent with the Certificate of Appropriateness Criteria and/or the directions from the Board.

   e. Silva Cells in 7'x7' tree pits, with the City Standard black and white bound aggregate system and fertilization trench, irrigation, and two (2) up-lights per City standards, shall be required for all street and shade trees, in a manner to be reviewed and approved by staff consistent with the Certificate of Appropriateness Criteria and/or the directions from the Board.

   f. The utilization of root barriers and/or Silva Cells, as applicable, shall be clearly delineated on the final revised landscape plan.

   g. A fully automatic irrigation system with 100% coverage and an automatic rain sensor in order to render the system inoperative in the event of rain. Right-of-way areas shall also be incorporated as part of the irrigation system.

   h. The applicant shall verify, prior to the issuance of a Building Permit, the exact location of all backflow prevention devices. Backflow prevention devices shall not be permitted within any required yard or any area fronting a street or sidewalk, unless otherwise permitted by the Land Development Regulations. The location of all backflow prevention devices, and how they are screened from the right-of-way, shall be clearly indicated on the site and landscape plans and shall be subject to the review and approval of staff. The fire department shall require a post-indicator valve (PIV) visible and accessible from the street.

   i. The applicant shall verify, prior to the issuance of a Building Permit, the exact location of all post-indicator valves (PIV), fire department connections (FDC) and all other related devices and fixtures, which shall be clearly indicated on the site and landscape plans, in a manner to be reviewed and approved by staff consistent with the Certificate of Appropriateness Criteria and/or the directions from the Board.

   j. The applicant shall verify, prior to the issuance of a Building Permit, the exact location of all applicable FPL transformers or vault rooms; such transformers and vault rooms, and all other related devices and fixtures, shall not be permitted within any required yard or any area fronting a street or sidewalk. The location of any exterior transformers, and how they are screened with landscape material from the right-of-way, shall be clearly indicated on the site and landscape plans in a manner to be reviewed and approved by staff consistent with the Certificate of Appropriateness Criteria and/or the directions from the Board.

   k. Prior to the issuance of a Certificate of Occupancy, the Landscape Architect for the project architect shall verify, in writing, that the project is consistent with the site and landscape plans approved by the Planning Department for Building Permit.

4. All building signage, with the exception of historic signage, shall be composed of flush mounted, non-plastic, individual letters and shall require a separate permit.

5. The final exterior surface color scheme, including color samples, shall be subject to the review and approval of staff and shall require a separate permit.

6. A traffic mitigation plan, which addresses all roadway Level of Service (LOS) deficiencies relative to the concurrency requirements of the City Code, if required, shall be submitted prior to the issuance of a Building Permit and the final building plans shall meet all other requirements of the Land Development Regulations of the City Code.

7. All new and altered elements, spaces and areas shall meet the requirements of the Florida Accessibility Code (FAC).

8. The project shall comply with any landscaping or other sidewalk/street improvement standards as may be prescribed by a relevant Urban Design Master Plan approved prior to the completion of the project and the issuance of a Certificate of Occupancy.

9. The applicant may be required to submit a separate analysis for water and sewer requirements, at the discretion of the Public Works Director, or designee. Based on a preliminary review of the proposed project, the following may be required by the Public Works Department:

   a. A traffic and neighborhood impact study shall be conducted as a means to measure a proposed development's impact on transportation and neighborhoods. The study shall address all roadway Level of Service (LOS) deficiencies relative to the concurrency requirements of the City Code, and if required, shall be submitted prior to the issuance of a Building Permit. The final building plans shall meet all other requirements of the Land Development Regulations of the City Code. The developer shall refer to the most recent City of Miami Beach's Traffic and Neighborhood Impact Methodology as issued by the Public Works Department.

   b. Remove/replace sidewalks, curbs and gutters on all street frontages, if applicable. Unless otherwise specified, the standard color for city sidewalks is red, and the standard curb and gutter color is gray.

   c. Mill/resurface asphalt in rear alley along property, if applicable.

   d. Provide underground utility service connections and on-site transformer location, if necessary.

   e. Provide back-flow prevention devices on all water services.

   f. Provide on-site, self-contained storm water drainage for the proposed development.

   g. Meet water/sewer concurrency requirements including a hydraulic water model analysis and gravity sewer system capacity analysis as determined by the Department and the required upgrades to water and sewer mains servicing this project.

   h. Payment of City utility impact fees for water meters/services.

   i. Provide flood barrier ramps to underground parking or minimum slab elevation to be at highest adjacent crown road elevation plus 8".

   j. Right-of-way permit must be obtained from Public Works.

   k. All right-of-way encroachments must be removed.

   l. All planting/landscaping in the public right-of-way must be approved by the Public Works and Parks Departments.

10. Satisfaction of all conditions is required for the Planning Department to give its approval on a Certificate of Occupancy; a Temporary Certificate of Occupancy or Partial Certificate of Occupancy may also be conditionally granted Planning Departmental approval.

11. The Final Order shall be recorded in the Public Records of Miami-Dade County, prior to the issuance of a Building Permit.

12. The Final Order is not severable, and if any provision or condition hereof is held void or unconstitutional in a final decision by a court of competent jurisdiction, the order shall be returned to the Board for reconsideration as to whether the order meets the criteria for approval absent the stricken provision or condition, and/or it is appropriate to modify the remaining conditions or impose new conditions.

13. The conditions of approval herein are binding on the applicant, the property's owners, operators, and all successors in interest and assigns.

14. Nothing in this order authorizes a violation of the City Code or other applicable law, nor allows a relaxation of any requirement or standard set forth in the City Code.

IT IS HEREBY ORDERED, based upon the foregoing findings of fact, the evidence, information, testimony and materials presented at the public hearing, which are part of the record for this matter, and the staff report and analysis, which are adopted herein, including the staff recommendations, which were amended by the Board, that the Certificate of Appropriateness is GRANTED for the above-referenced project subject to those certain conditions specified in paragraph E of the Findings of Fact (Condition Nos. 1-14 inclusive) hereof, to which the applicant has agreed.

PROVIDED, the applicant shall build substantially in accordance with the plans approved by the Historic Preservation Board, as determined by staff, "The Haddon Hall & Campton Apartments – Renovation", as prepared by ADD Inc., dated December 16, 2013.

When requesting a building permit, the plans submitted to the Building Department for permit shall be consistent with the plans approved by the Board, modified in accordance with the conditions set forth in this Final Order. No building permit may be issued unless and until all conditions of approval that must be satisfied prior to permit issuance, as set forth in this Final Order, have been met.

The issuance of this Certificate of Appropriateness does not relieve the applicant from obtaining all other required Municipal, County and/or State reviews and permits, including final zoning approval. If adequate handicapped access is not provided on the Board-approved plans, this approval does not mean that such handicapped access is not required. When requesting a building permit, the plans submitted to the Building Department for permit shall be consistent with the plans approved by the Board, modified in accordance with the conditions set forth in this Order.

If the Full Building Permit for the project is not issued within eighteen (18) months of the meeting date at which the original Certificate of Appropriateness was granted, this Certificate of Appropriateness will expire and become null and void. If the Full Building Permit for the project should expire for any reason (including but not limited to construction not commencing and continuing, with required inspections, in accordance with the applicable Building Code), this Certificate of Appropriateness will expire and become null and void.

In accordance with Section 118-561 of the City Code, the violation of any conditions and safeguards that are a part of this Order shall be deemed a violation of the land development regulations of the City Code. Failure to comply with this **Order** shall subject this Certificate of Appropriateness to Section 118-564, City Code, for revocation or modification of the Certificate of Appropriateness.

Dated this 30th day of JANUARY, 2014

OR BK 29041 PG 2748
LAST PAGE

HISTORIC PRESERVATION BOARD
THE CITY OF MIAMI BEACH, FLORIDA

BY: ______
THOMAS R. MOONEY, AICP
DESIGN AND PRESERVATION MANAGER
FOR THE CHAIR

STATE OF FLORIDA)
)SS
COUNTY OF MIAMI-DADE)

The foregoing instrument was acknowledged before me this 30th day of January 2014 by Thomas R. Mooney, Design and Preservation Manager, Planning Department, City of Miami Beach, Florida, a Florida Municipal Corporation, on behalf of the corporation. He is personally known to me.

WALDHYS J. RODOLI
MY COMMISSION # FF039521
EXPIRES: JUL 24, 2017
Bonded through 1st State Insurance

NOTARY PUBLIC
Miami-Dade County, Florida
My commission expires: 7-24-17

Approved As To Form:
Legal Department: ______ (1-30-2014)

Filed with the Clerk of the Historic Preservation Board on 1-30-2014 (WJR)
F:\PLAN\$HPB\14HPB\Jan14\7390-Jan2014.FO.docx

MTCI
PRIVATE PROVIDER SERVICES, LLC
Construction Plans Review, Inspections, Testing & Consulting

	REVIEWER INITIALS	DATE REVIEWED
BUILDING	EM	11-16-14
STRUCTURAL		
MECHANICAL		
ELECTRICAL		
PLUMBING		
[illegible]		

HPBorder7390 &
Supplemental order

APPROVED
MIAMI BEACH
FIRE DEPARTMENT

HADDON HALL
1500 COLLINS AVE
MIAMI BEACH, FL

KEYPLAN N.T.S.

REVISIONS

NO.	DESCRIPTION	ISSUE DATE
6	P&Z REVIEW COMMENTS	04-18-2014

100% CONSTRUCTION DOCUMENT SET

SEAL
Jonathan Cardello
Lic. # AR93391

ADD Inc Architecture Interiors Planning
One Biscayne Tower
Suite 1670
Two South
Biscayne Boulevard
Miami, Fl 33131
T. 305.482.8700
F. 305.482.8770
www.addinc.com
Lic. # AA26001507
Boston Miami

JOB NUMBER: 13036.00
CHECKED BY:
ISSUE DATE: FEBRUARY 18, 2014
SCALE: NTS

SHEET TITLE
RECORDED ORDER SCANS

SHEET NUMBER
G000

COPYRIGHT ADD INC 2011

CFN 2014R0342187
OR Bk 29158 Pgs 2855 - 2859; (5pgs)
RECORDED 05/20/2014 09:57:35
HARVEY RUVIN, CLERK OF COURT
MIAMI-DADE COUNTY, FLORIDA

BOARD OF ADJUSTMENT
CITY OF MIAMI BEACH, FLORIDA

PROPERTY: 1500 Collins Avenue and 1455 Washington Avenue

FILE NO. 3686

IN RE: The application for the following variances: a variance to waive the required minimum hotel unit size within an existing 'Contributing' structure, a variance to waive the required minimum rear setback for the construction of a new building, a variance to waive the required side setback and a variance to waive the required rear setback for an accessory structure, and a variance to waive the minimum required side setback for a pool deck in order to make renovations to the existing hotels.

LEGAL DESCRIPTION: See attached exhibit "A"

MEETING DATE: March 7, 2014

ORDER

The applicant, Haddon Hall Hotel Owner, LLC., filed an application with the Planning Department for the following variances in order to make renovations to the existing hotels:

1. A variance to waive the required minimum hotel unit size within the Historic structure: 15% of the hotel units shall be between 300-335 s.f. and 85% of units shall be 335 s.f. or larger, in order to retain 18 hotel units at less than 300 s.f. (the smallest at 209 s.f.), 2 hotel units between 300 s.f. and 335 s.f. (6% of the units) and 14 hotel units exceeding 335 s.f. (41% of units).
2. A variance to waive 6'-0" of the minimum required rear setback of 10'-0" in order to build an addition on the west side of the pool cabana structure at 4'-0" from the rear property line.
3. A variance to waive 3'-6" of the minimum required rear setback of 7'-6" for an accessory structure in order to build a trellis on the northwest side of the pool deck at 4'-0" from the rear property line.
4. A variance to waive 3'-6" of the minimum required side setback of 7'-6" for an accessory structure in order to build a trellis on the northwest side of the pool deck at 4'-0" from the north property line.
5. A variance to waive all of the minimum required interior side setback of 7'-6" for a pool deck in order to retain the existing pool deck up to the north property line.

The City of Miami Beach Board of Adjustment makes the following FINDINGS OF FACT, based upon the evidence, information, testimony and materials presented at the public hearing and which are part of the record for this matter:

5

A. Based on the plans and documents submitted with the application, testimony and information provided by the applicant, and the Planning Department Staff Report, the project as submitted satisfies the requirements of Section 118-353(d) of the Miami Beach Code. Accordingly, the Board of Adjustment has determined the following:

That special conditions and circumstances exist which are peculiar to the land, structure, or building involved and which are not applicable to other lands, structures, or buildings in the same zoning district;

That the special conditions and circumstances do not result from the action of the applicant;

That granting the variance requested will not confer on the applicant any special privilege that is denied by this Ordinance to other lands, buildings, or structures in the same zoning district;

That literal interpretation of the provisions of this Ordinance would deprive the applicant of rights commonly enjoyed by other properties in the same zoning district under the terms of this Ordinance and would work unnecessary and undue hardship on the applicant;

That the variance granted is the minimum variance that will make possible the reasonable use of the land, building or structure;

That the granting of the variance will be in harmony with the general intent and purpose of this Ordinance and that such variance will not be injurious to the area involved or otherwise detrimental to the public welfare; and

That the granting of this request is consistent with the comprehensive plan and does not reduce the levels of service as set forth in the plan.

B. The Board imposes the following conditions based on its authority in Section 118-354 of the Miami Beach City Code:

1. Substantial modifications to the plans submitted and approved as part of the application, as determined by the Planning Director or designee, may require the applicant to return to the Board for approval of the modified plans, even if the modifications do not affect variances approved by the Board.
2. The applicant shall comply with all conditions imposed by the Historic Preservation Board. (HPB File No. 7390)
3. Revised plans shall be submitted to provide details of the trellis structure in a manner to be reviewed and approved by staff.
4. The applicant shall comply with all conditions imposed by the Public Works Department.
5. The conditions on this Order are binding on the applicant, the property's owners and all successors in interest and assigns.

6. This order is not severable, and if any provision or condition hereof is held void or unconstitutional in a final decision by a court of competent jurisdiction, the order shall be returned to the Board for reconsideration as to whether the order meets the criteria for approval absent the stricken provision or condition, and/or it is appropriate to modify the remaining conditions or impose new conditions.
7. Nothing in this order authorizes a violation of the City Code or other applicable law, nor allows a relaxation of any requirement or standard set forth in the City Code, except to the extent of the variance granted herein.
8. This Order shall be recorded, at the expense of the applicant, in the Public Records of Miami-Dade County; the original or a certified copy shall be provided to the Planning Department prior to the issuance of a Building Permit.

IT IS HEREBY ORDERED, based upon the foregoing findings of fact, the evidence, information, testimony and materials presented at the public hearing, which are part of the record for this matter, and the staff report and analysis, which are adopted herein, including staff recommendations, as modified by the Board of Adjustment, that the application for Variance Approval is GRANTED for the above-referenced project, subject to those certain conditions specified in Paragraph B (Condition Nos. 1-8, inclusive) hereof, to which the applicant has agreed.

PROVIDED, the applicant shall build substantially in accordance with the plans approved by the Board of Adjustment, as determined by staff, entitled "The Haddon Hall Hotel & Campton Apartments - Renovation", as prepared by ADD Inc., dated January 23, 2014, modified in accordance with the conditions set forth in this Order and staff review and approval.

No building permit may be issued unless and until all conditions of approval that must be satisfied prior to permit issuance as set forth in this Order have been met. The issuance of this Order does not relieve the applicant from obtaining all other required Municipal, County and/or State reviews and permits, including final zoning approval. If adequate handicapped access is not provided on the Board-approved plans, this approval does not mean that such handicapped access is not required.

When requesting a building permit, the plans submitted to the Building Department for permit shall be consistent with the plans approved by the Board, modified in accordance with the conditions set forth in this Order.

If the Full Building Permit for the project is not issued within eighteen (18) months of the meeting date at which the original Variance Approval was granted, the subject Approval will expire and become null and void, unless the applicant makes application to the Board for an extension of time, in accordance with the requirements and procedures of Chapter 118 of the City Code; the granting of any such extension of time shall be at the discretion of the Board. At the hearing on any such application, the Board may deny or approve the request and modify the above conditions or impose additional conditions. If the Full Building Permit should expire for any reason (including but not limited to construction not commencing and continuing, with required inspections, in accordance with the applicable Building Code), and not reinstated by the Building Official or designee, the Variance Approval will expire and become null and void.

Dated this 15th day of April, 2014.

BOARD OF ADJUSTMENT
CITY OF MIAMI BEACH, FLORIDA

BY: ____________________
Thomas R. Mooney, AICP
Acting Planning Director
For the Chair

STATE OF FLORIDA)
COUNTY OF MIAMI-DADE)

The foregoing instrument was acknowledged before me this ____ day of ________, ____ by Thomas R. Mooney, Acting Planning Director of the City of Miami Beach, Florida, a Florida Municipal Corporation, on behalf of the corporation. He is personally known to me.

Notary:
Print Name:
Notary Public, State of Florida
My Commission Expires:
Commission Number:

[NOTARIAL SEAL] TERESA MARIA MY COMMISSION # FF 042180 EXPIRES: December 2, 2017 Bonded Thru Budget Notary Services

Approved As To Form:
City Attorney's Office (4-15-14)

Filed with the Clerk of the Board of Adjustment on 04/16/14 ( )

F:\PLAN\$zba\FINALORD\3686 - Order - 1500 Collins Ave and 1455 Washington Ave 3-7-2014.docx

OR BK 29158 PG 2859
LAST PAGE

EXHIBIT "A"

Legal Description

PARCEL 1

LOTS ONE (1) AND TWO (2) OF BLOCK SEVENTY-SIX (76) OF FISHER'S FIRST SUBDIVISION OF ALTON BEACH, ACCORDING TO THE PLAT THEREOF RECORDED IN PLAT BOOK 2, AT PAGE 77 OF THE PUBLIC RECORDS OF DADE COUNTY, FLORIDA, AND ALSO THE FOLLOWING DESCRIBED LAND: THAT PART OF VACATED FIFTEENTH STREET FORMERLY KNOWN AS AVENUE D, DESCRIBED AS FOLLOWS:
BEGIN AT THE NORTHEAST CORNER OF LOT 1 OF BLOCK 76 OF FISHER'S FIRST SUBDIVISION OF ALTON BEACH, ACCORDING TO THE PLAT THEREOF RECORDED IN PLAT BOOK 2, PAGE 77, OF THE PUBLIC RECORDS OF DADE COUNTY, FLORIDA; THENCE NORTHEASTERLY ALONG WEST LINE OF COLLINS AVENUE A DISTANCE OF 79.98 FEET TO THE SOUTHEAST CORNER OF LOT 1, OF BLOCK 57 OF THE AFORESAID SUBDIVISION; THENCE WESTERLY ALONG THE SOUTHERLY LINE OF LOT 1, BLOCK 57 OF THE AFORESAID SUBDIVISION A DISTANCE OF 172.01 FEET, MORE OR LESS, TO A POINT WHERE THE WESTERLY LINE OF LOT 2 OF BLOCK 76 OF THE AFORESAID SUBDIVISION EXTENDED NORTHERLY INTERSECTS THE SOUTHERLY LINE OF LOT 1, OF BLOCK 57 OF THE AFORESAID SUBDIVISION; THENCE SOUTHERLY A DISTANCE OF 70 FEET TO THE NORTHWEST CORNER OF LOT 2 OF BLOCK 76 OF THE AFORESAID SUBDIVISION; THENCE EASTERLY ALONG THE NORTHERLY LINE OF LOT 2 AND 1 OF BLOCK 76 OF THE AFORESAID SUBDIVISION, A DISTANCE OF 155.21 FEET TO THE POINT OF BEGINNING.

PARCEL 2

COMMENCING AT THE NORTHWEST CORNER OF LOT 5, BLOCK 76 OF FISHER'S FIRST SUBDIVISION OF ALTON BEACH, AS SAME IS SHOWN UPON A RECORDED PLAT OF SAID SUBDIVISION, RECORDED IN PLAT BOOK 2, AT PAGE 77, OF THE PUBLIC RECORDS OF DADE COUNTY, FLORIDA; THENCE RUN EAST ALONG THE NORTH LINE OF SAID BLOCK 76, A DISTANCE OF ONE HUNDRED (100) FEET TO THE POINT OF BEGINNING OF THE TRACT OF LAND HEREIN DESCRIBED:

FROM SAID POINT OF BEGINNING RUN NORTH ALONG A LINE DEFLECTING 90 DEGREES TO THE LEFT, SAID LINE BEING PARALLEL TO AND ONE HUNDRED (100) FEET DISTANT EASTERLY FROM THE EASTERLY LINE OF WASHINGTON AVENUE, AS ABOVE RECORDED, A DISTANCE OF ONE HUNDRED FORTY-FIVE (145) FEET TO A POINT ON THE NORTH LINE OF THE SOUTH 1/2 OF LOT 19, BLOCK 57, FISHER'S FIRST SUBDIVISION OF ALTON BEACH, AS RECORDED IN PLAT BOOK 2, AT PAGE 77, PUBLIC RECORDS OF DADE COUNTY, FLORIDA; THENCE RUN EASTERLY ALONG A LINE DEFLECTING 90 DEGREES TO THE RIGHT ALONG THE NORTH LINE OF THE SOUTH 1/2 OF LOT 19, BLOCK 57, A DISTANCE OF SEVENTY-FIVE (75) FEET TO A POINT ON THE WEST LINE OF LOT 2, OF SAID BLOCK 57, THENCE RUN SOUTHERLY ALONG A LINE DEFLECTING 90 DEGREES TO THE RIGHT ALONG THE DIVIDING LINE BETWEEN LOTS 1 AND 2, AND LOT 20 AND THE SOUTH 1/2 OF LOT 19, BLOCK 57, A DISTANCE OF SEVENTY-FIVE (75) FEET TO A POINT, SAID POINT BEING THE SOUTHEASTERLY CORNER OF LOT 20, OR THE SOUTHWESTERLY CORNER OF LOT 1, OF SAID BLOCK 57; THENCE RUN SOUTHEASTERLY ALONG A LINE DEFLECTING TO THE LEFT 4°05'08.2", A DISTANCE OF 70.178 FEET TO A POINT, SAID POINT BEING THE NORTHEASTERLY CORNER OF LOT 3, OF SAID BLOCK 76, FISHER'S FIRST SUBDIVISION; THENCE RUN WESTERLY ALONG A LINE DEFLECTING TO THE RIGHT 94°05'08.2" ALONG THE NORTHERLY LINE OF SAID BLOCK 76, A DISTANCE OF EIGHTY (80) FEET TO THE POINT OF BEGINNING OF THE TRACT OF LAND HEREIN DESCRIBED, CONTAINING 0.254 ACRES, MORE OR LESS.

PARCEL 3

LOT 3, 4 AND 5, IN BLOCK 76, OF FISHER'S FIRST SUBDIVISION OF ALTON BEACH, ACCORDING TO THE PLAT THEREOF, AS RECORDED IN PLAT BOOK 2, AT PAGE 77, OF THE PUBLIC RECORD OF DADE COUNTY, FLORIDA.

STATE OF FLORIDA, COUNTY OF DADE
I HEREBY CERTIFY that this is a true copy of the original filed in this office on ________ day of MAY 20 2014, A.D. 20____
WITNESS my hand and Official Seal.
HARVEY RUVIN, CLERK, of Circuit and County Courts
D.C.

MTCI
PRIVATE PROVIDER SERVICES, LLC
Construction Plans Review, Inspections, Testing & Consulting

	REVIEWER INITIALS	DATE REVIEWED
BUILDING	EM	11-6-14
STRUCTURAL		
MECHANICAL		
ELECTRICAL		
PLUMBING		

APPROVED
MIAMI BEACH
FIRE DEPARTMENT

HADDON HALL
1500 COLLINS AVE
MIAMI BEACH, FL

KEYPLAN N.T.S.

REVISIONS

NO.	DESCRIPTION	ISSUE DATE
6	P&Z REVIEW COMMENTS	04-18-2014

100% CONSTRUCTION DOCUMENT SET

SEAL

5-22-14
Jonathan Cardello
Lic. # AR93391

ADD Inc Architecture Interiors Planning

One Biscayne Tower
Suite 1670
Two South
Biscayne Boulevard
Miami, Fl 33131
T. 305.482.8700
F. 305.482.8770
www.addinc.com
Lic. # AA26001507
Boston Miami

JOB NUMBER:	13036.00
CHECKED BY:	
ISSUE DATE:	FEBRUARY 18, 2014
SCALE:	NTS

SHEET TITLE

RECORDED ORDER SCANS - BOA

6

SHEET NUMBER

G000a

COPYRIGHT ADD INC 2011

DRAWING LOG

DWG. NO.	TITLE	SCHEMATIC DESIGN 10.18.2013	DESIGN DEV. 11.22.2013	80% CD SET 02.05.2014	100% CD SET 02.18.2014	100% CD SET COORDINATION 03.05.2014	PERMIT REVIEW COMMENTS 03.14.2014	REVS 3–8 04.01.2014 – 04.23.2014	REVS 9 PHASE. PERMIT 05.30.2014	REVS 10 FIRE REVIEW COMMENTS 07.03.2014	REVS 11 P & Z COMMENTS 07.14.2014	REVS 12 FIRE & MTCI COMMENTS 08.21.2014	REVS 12a FIRE & MTCI COMMENTS 09.29.2014
	G – GENERAL												
	COVER												
G000	RECORDED ORDER SCANS							●					
G000a	RECORDED ORDER SCANS – BOA							●					
G001	DRAWING INDEX	●	●	●	●		●		●	●	●	●	●
G001a	DRAWING INDEX							●	●	●		●	●
G002	LEGENDS, ABBREVIATIONS, AND NOTES	●	●	●	●				●				
G011	DESIGN DATE, CODE INFO	●	●	●	●				●	●	●	●	●
G011a	ADA SITE ACCESS	●	●	●	●		●		●				●
G012	CODE INFO		●	●	●				●				
G013	AREA PLANS		●	●	●				●				
	CS – CIVIL SURVEY												
CS-1	BOUNDARY & TOPOGRAPHY SURVEY – SHEET 1	●	●	●	●				●				
CS-2	BOUNDARY & TOPOGRAPHY SURVEY – SHEET 2	●	●	●	●				●				
	C – CIVIL												
GEN-1	GENERAL INFORMATION AND NOTES	●	●	●	●								
GEN-2	GENERAL NOTES AND CMB PWD NOTES		●	●	●								
GEN-3	EXISTING CONDITIONS		●	●	●								
GEN-4	OVERALL SITE PLAN			●	●								
PGD-1	PAVING, GRADING, AND DRAINAGE		●	●	●								
PGD-2	PAVING, GRADING, AND DRAINAGE		●	●	●								
PGD-3	PAVING, GRADING, AND DRAINAGE		●	●	●								
PGD-4	PAVING AND DRAINAGE DETAILS 1		●	●	●								
PGD-5	PAVING AND DRAINAGE DETAILS 2		●	●	●								
PGD-6	PAVING AND DRAINAGE DETAILS 3		●	●	●								
PGD-7	PAVING AND DRAINAGE DETAILS 4			●	●								
PGD-8	FDOT DRIVEWAY ACCESS PLAN AND DETAILS												
WS-1	WATER SERVICE SITE PLAN 1		●	●	●								
WS-2	WATER SERVICE SITE PLAN 2			●	●								
WS-3	WATER SERVICE DETAIL 1			●	●								
WS-4	FIRE LINE DETAILS 2			●	●								
SS-1	SANITARY SEWER SERVICE SITE PLAN 1			●	●								
SS-2	SANITARY SEWER SERVICE SITE PLAN 2			●	●								
SS-3	SANITARY SEWER PROFILE AND NOTES			●	●								
SS-4	SANITARY SEWER CITY DETAILS 1			●	●								
SS-5	SANITARY SEWER DETAILS 2			●	●								
	L – LANDSCAPE												
LH-1	LANDSCAPE HARDSCAPE PLAN	●	●	●	●			●			●		
LH-2	LANDSCAPE HARDSCAPE DETAILS			●	●			●				●	
LL-1	LANDSCAPE LIGHTING PLAN	●	●	●	●			●				●	
LL-1.1	LANDSCAPE LIGHTING PLAN – CAMPTON COURTYARD												
LP-1	LANDSCAPE PLANTING PLAN	●	●	●	●			●			●		
LP-1.1	LANDSCAPE PLANTING PLAN – CAMTON COURTYARD	●						●			●		
LP-2	LANDSCAPE PLANTING DETAILS			●	●			●					
LI-1	LANDSCAPE IRRIGATION PLAN			●	●			●					
LI-1.1	LANDSCAPE IRRIGATION PLAN – CAMPTON COURTYARD							●				●	
LI-2	LANDSCAPE IRRIGATION – DETAILS			●	●			●					
LT-1	TREE MANAGEMENT PLAN			●	●			●	●	●			
	L – LIFE SAFETY												
LS000	LIFE SAFETY SITE PLAN			●	●		●	●		●		●	●
LS100	LIFE SAFETY PLAN BASEMENT LEVEL		●	●	●			●		●		●	
LS101	LIFE SAFETY PLAN FIRST FLOOR		●	●	●			●	●	●		●	●
~~LS101a~~	~~LIFE SAFETY PLAN~~ VOID							●	●				
LS102	LIFE SAFETY PLAN SECOND FLOOR		●	●	●			●	●	●		●	●
~~LS102a~~	~~LIFE SAFETY PLAN SECOND FLOOR~~ VOID								●				
LS103	LIFE SAFETY PLAN THIRD FLOOR		●	●	●			●	●	●		●	●
LS104	LIFE SAFETY PLAN FOURTH FLOOR		●	●	●			●					●
LS105	FIRE SAFETY ALTERNATIVE METHOD									●		●	●
	A – ARCHITECTURE												
AD100	BASEMENT LEVEL DEMOLITION PLAN	●	●	●	●		●					●	●
AD101	FIRST FLOOR DEMOLITION PLAN	●	●	●	●		●	●	●				
AD102	SECOND FLOOR DEMOLITION PLAN	●	●	●	●		●	●					
AD103	THIRD FLOOR DEMOLITION PLAN	●	●	●	●		●						
AD104	ROOF DECK DEMOLITION PLAN	●	●	●	●		●						
AD301	EXTERIOR DEMO EAST AND WEST ELEV. ROOF ELEVATIONS	●	●	●	●		●	●					
AD302	EXTERIOR EXISTING / DEMO ELEVATIONS	●	●	●	●		●	●					
AD303	EXTERIOR EXISTING / DEMO ELEVATIONS	●	●	●	●		●	●					
AD304	EXTERIOR EXISTING / DEMO ELEVATIONS		●	●	●		●						
A001	ARCHITECTURAL SITE PLAN	●	●	●	●			●			●	●	●
A002	ENLARGED FIRST FLOOR PLAN – CENTER AREA 'A'		●	●	●		●	●		●	●		●
A003	SITE DETAILS		●	●	●			●	●	●			
A004	SITE DETAILS – HISTORIC FOUNTAIN, STATUE & PILLAR/LANTERNS		●	●	●			●			●		
A005	ENLARGED POOL DECK PLAN			●	●			●					
A006	ENLARGED ARCHITECTURAL SITE PLAN			●	●						●		
A007	MISCELANEOUS SITE DETAILS				●		●				●		
A008	ENLARGED CAMPTON YARD PLAN							●			●		●
A009	SITE DETAILS – CAMPTON YARD							●			●		
A100	OVERALL BASEMENT FLOOR PLAN	●	●	●	●								
A101	OVERALL FIRST FLOOR PLAN	●	●	●	●		●	●	●	●			●
A102	ARCHITECTURAL SECOND FLOOR PLAN	●	●	●	●		●	●		●			●
A103	ARCHITECTUAL THIRD FLOOR PLAN	●	●	●	●		●	●		●			●
A104	OVERALL ROOF FLOOR PLAN	●	●	●	●					●	●		
A110	ENLARGED BASEMENT PLAN	●	●	●	●		●	●	●	●	●		
A111	ENLARGED PUBLIC AREAS			●	●		●				●		
A111a1	ENLARGED FIRST FLOOR PLAN – NORTH AREA 'A'	●	●	●	●	●	●	●			●		●
A111a2	ENLARGED FIRST FLOOR PLAN – SOUTH AREA 'A'	●	●	●	●	●	●	●		●	●	●	●
A111b	ENLARGED FIRST FLOOR PLAN AREA 'B'	●	●	●	●	●	●	●	●	●		●	●
A111c	ENLARGED FIRST FLOOR PLAN AREA 'C'		●	●	●	●	●	●		●		●	
A112a1	ENLARGED SECOND FLOOR PLAN – NORTH AREA 'A'	●	●	●	●	●	●	●		●			●
A112a2	ENLARGED SECOND FLOOR PLAN – SOUTH AREA 'A'	●	●	●	●	●	●	●		●			●
A112b	ENLARGED SECOND FLOOR PLAN AREA 'B'	●	●	●	●	●	●	●		●		●	●
A112c	ENLARGED 2ND FLOOR PLAN AREA 'C'		●	●	●			●				●	
A113a1	ENLARGED THIRD FLOOR PLAN – NORTH AREA 'A'	●	●	●	●	●	●	●		●			●
A113a2	ENLARGED THIRD FLOOR PLAN – SOUTH AREA 'A'	●	●	●	●	●	●	●		●			●
A113b	ENLARGED ROOF PLAN AREA 'B'	●	●	●	●	●	●	●				●	
A113c	ENLARGED 3RD FLOOR PLAN AREA 'C'		●	●	●			●				●	
A114a1	ENLARGED ROOF PLAN AREA 'A' NORTH	●	●	●	●	●	●	●				●	
A114a2	ENLARGED FIRST FLOOR PLAN – AREA 'B' (CAMPTON)	●	●	●	●	●	●	●				●	
A114c	ENLARGED ROOF PLAN AREA 'C'		●	●	●			●					

DRAWING LOG

DWG. NO.	TITLE	SCHEMATIC DESIGN 10.18.2013	DESIGN DEV. 11.22.2013	80% CD SET 02.05.2014	100% CD SET 02.18.2014	100% CD SET COORDINATION 03.05.2014	PERMIT REVIEW COMMENTS 03.14.2014	REVS 3–8 04.01.2014 – 04.23.2014	REVS 9 PHASE. PERMIT 05.30.2014	REVS 10 FIRE REVIEW COMMENTS 07.03.2014	REVS 11 P & Z COMMENTS 07.14.2014	REVS 12 FIRE & MTCI COMMENTS 08.21.2014	REVS 12a FIRE & MTCI COMMENTS 09.29.2014
A181	PARTITION TYPES		●	●	●			●				●	●
A182	UL ASSEMBLIES			●	●					●			
A183	UL ASSEMBLIES		●	●	●					●			
A191	DOOR SCHEDULE		●	●	●	●	●	●	●	●	●	●	●
A192	DOOR HARDWARE SCHEDULE									●			
A196	DOOR & FRAME TYPES & DETAILS		●	●	●	●	●	●		●		●	
A197	DOOR & FRAME DETAILS	●	●	●	●	●				●			●
A200	BASEMENT FLOOR REFLECTED CEILING PLAN			●	●					●			
A201	FIRST FLOOR REFLECTED CEILING PLAN	●	●	●	●		●	●		●			
A202	SECOND FLOOR REFLECTED CEILING PLAN	●	●	●	●		●	●		●			
A203	THIRD FLOOR REFLECTED CEILING PLAN		●	●	●		●	●		●			
A204	ROOF DECK REFLECTED CEILING PLAN		●	●	●					●			
A210	ENLARGED BASEMENT REFLECTED CEILING PLAN – HADDON HALL		●	●	●					●			
A211	ENLARGED PUBLIC AREAS/COURTYARD CEILING PLAN – FIRST FLOOR		●	●	●		●			●	●		
A211a1	ENLARGED HADDON HALL REFLECTED CEILING PLAN FIRST FLOOR – NORTH		●	●	●		●			●			
A211a2	ENLARGED HADDON HALL REFLECTED CEILING PLAN FIRST FLOOR – SOUTH				●			●		●			
A211b	ENLARGED CAMPTON APT. REFLECTED CEILING PLAN – FIRST FLOOR		●	●	●		●		●	●			
A211c	ENLARGED POOL SUITES REFLECTED CEILING PLAN – FIRST FLOOR		●	●	●		●	●		●			
A212a1	ENLARGED HADDON HALL REFLECTED CEILING PLAN SECOND FLOOR – NORTH		●	●	●		●	●		●			
A212a2	ENLARGED HADDON HALL REFLECTED CEILING PLAN SECOND FLOOR – SOUTH		●	●	●		●	●		●			
A212b	ENLARGED CAMPTON APTS. REFLECTED CEILING PLAN SECOND FLOOR		●	●	●		●			●			
A212c	ENLARGED POOL SUITES REFLECTED CEILING PLAN SECOND FLOOR		●	●	●		●	●		●			
A213a1	ENLARGED HADDON HALL REFLECTED CEILING PLAN THIRD FLOOR – NORTH		●	●	●		●	●		●			
A213a2	ENLARGED HADDON HALL REFLECTED CEILING PLAN THIRD FLOOR – SOUTH		●	●	●		●	●		●			
A213c	ENLARGED POOL SUITES REFLECTED CEILING PLAN THIRD FLOOR – SOUTH		●	●	●		●	●		●			
A214	ENLARGED ROOF DECK REFLECTED CEILING PLAN			●	●					●			
A281	LIGHTING SCHEDULE & CEILING DETAILS			●	●		●						
A301	EXTERIOR ELEVATIONS WEST EAST & ROOFTOP		●	●	●		●				●		
A302	EXTERIOR ELEVATIONS WEST EAST & SOUTH	●	●	●	●			●		●	●		
A303	EXTERIOR ELEVATIONS NORTH EAST & WEST	●	●	●	●			●	●		●		
A304	EXTERIOR ELEVATION CAMPTON & HADDON COURTYARD	●	●	●	●						●		
A321	BUILDING SECTIONS	●	●	●	●							●	
A322	BUILDING SECTIONS		●	●	●								
A323	BUILDING 'C' SECTIONS			●	●						●		
A411	EXISTING TYPICAL EXTERIOR WALL SECTIONS		●	●	●		●						
A412	EXISTING TYPICAL EXTERIOR WALL SECTIONS		●	●	●								
A413	TYPICAL EXTERIOR WALL SECTIONS BLDG-C POOL SUITES			●	●								
A415	TYPICAL EXTERIOR WALL SECTIONS-POOL SUITES (C)			●	●								
A420	TYP. EXTERIOR WALL AND ROOF DETAIL SECTIONS		●	●	●								
A421	FLOOD MITIGATION PLAN & ELEVATIONS										●		
A431	WINDOW TYPES		●	●	●		●				●	●	●
A432	WINDOW AND STOREFRONT DETAILS		●	●	●		●						
A433	WINDOW AND STOREFRONT DETAILS		●	●	●								
A501	ENLARGED VERTICAL DETAILS & PENETRATION DETAILS		●	●	●		●						
A502	REPAIR DETAILS									●			
A591	ROOF DETAILS		●	●	●								
A602	ELEVATOR ENLARGED PLAN & SECTION			●	●								
A603	ELEVATOR INTERIOR FINISHES		●	●	●								
A611	STAIR PLANS AT HADDON HALL		●	●	●			●					
A612	STAIR PLANS AT CAMPTON		●	●	●		●	●					
A613	SECTIONS THRU STAIRS #1 & #2 POOL SUITES (C)			●	●			●					
A617	STAIR TYP. DETAILS	●	●	●	●			●					
A700	BASEMENT LEVEL POWER & SIGNAL PLAN		●	●	●								
A701	FIRST FLOOR POWER & SIGNAL PLAN		●	●	●		●						
A702	SECOND FLOOR POWER & SIGNAL PLAN		●	●	●			●					
A703	THIRD FLOOR POWER & SIGNAL PLAN		●	●	●								
A704	ROOF LEVEL POWER & SIGNAL PLAN		●	●	●								
A710	BASEMENT LEVEL FINISH PLAN		●	●	●			●					
A711	FIRST FLOOR FINISH PLAN I HADDON NORTH AREA		●	●	●			●					
A711a1	FIRST FLOOR FINISH PLAN – HADDON SOUTH AREA							●					
A711a2	FIRST FLOOR FINISH PLAN				●								
A711b	FIRST FLOOR FINISH PLAN – CAMPTON					●							
A712	SECOND FLOOR FINISH PLAN		●	●	●			●					
A713	THIRD FLOOR FINISH PLAN		●	●	●			●					
A714	FOURTH FLOOR FINISH PLAN		●	●	●			●					
A715	FINISH SCHEDULE		●	●	●					●			
A716	FINISH DETAILS			●	●								●
A717	DETAIL SIGNAGE				●								
A720	BASEMENT FURNITURE PLAN		●	●	●								
A721	FIRST FLOOR FURNITURE PLAN		●	●	●			●	●				
~~A721a~~	~~ENLARGED FIRST FLOOR FURNITURE PLAN~~ SEE SHEET A009						●		●				
A722	SECOND FLOOR FURNITURE PLAN			●	●			●					
A723	THIRD FLOOR FURNITURE PLAN			●	●			●					
A731	INTERIOR ELEVATIONS PUBLIC AREAS		●	●	●								
A732	INTERIOR ELEVATIONS PUBLIC AREAS	●	●	●	●								
A733	INTERIOR ELEVATIONS PUBLIC AREAS	●	●	●	●								
A734	INTERIOR ELEVATIONS PUBLIC AREAS			●	●								
A735	PLUMBING SCHDULE			●	●								
A751	STANDARD TOILET ROOMS ADA MOUNTING HEIGHTS		●	●	●		●						
A800	MILLWORK DETAILS			●	●							●	
A801	MILLWORK DETAILS				●								
A802	MILLWORK DETAILS			●	●		●	●					
A803	MILLWORK DETAILS			●	●								
A804	MILLWORK DETAILS				●		●			●			
A805	MILLWORK DETAILS – EXTERIOR							●			●	●	
A900	ROOM TYPE PLAN							●					●
A901	ENLARGED GUESTROOM PLANS TYPE A1		●	●	●			●					
A901a	TYPICAL HADDON HALL GUESTROOM AND RESTROOM ELEVATIONS	●	●	●	●		●	●					
A902	ENLARGED GUESTROOM PLANS TYPE A2	●	●	●	●			●					
A903	ENLARGED GUESTROOM PLANS TYPE A3	●	●	●	●			●					
A904	ENLARGED GUESTROOM PLANS TYPE A4	●	●	●	●			●					
A905	ENLARGED GUESTROOM PLANS TYPE A5	●	●	●	●			●					
A906	ENLARGED GUESTROOM PLANS TYPE A6		●	●	●			●					
A907	ENLARGED GUESTROOM PLANS TYPE A7		●	●	●			●					
A908	ENLARGED GUESTROOM PLANS TYPE A8		●	●	●			●					
A909	ENLARGED GUESTROOM PLANS TYPE A9		●	●	●			●					
A910	ENLARGED GUESTROOM PLANS TYPE A10		●	●	●			●					
A911	ENLARGED GUESTROOM PLANS TYPE A11		●	●	●			●					

MTCI PRIVATE PROVIDER SERVICES, LLC
Construction Plans Review, Inspections, Testing & Consulting

	REVIEWER INITIALS	DATE REVIEWED
BUILDING	EM	11-10-14
STRUCTURAL		
MECHANICAL		
ELECTRICAL		

APPROVED
MIAMI BEACH
FIRE DEPARTMENT

HADDON HALL
1500 COLLINS AVE
MIAMI BEACH, FL

KEYPLAN N.T.S.

REVISIONS

NO.	DESCRIPTION	ISSUE DATE
1	PROGRESS TO 100% CD	02-18-2014
10	MASTER PERMIT COMMENTS	07-03-2014
11	P&Z COMMENTS	07-14-2014
12	FIRE & MTCI PERMIT COMMENTS	08-21-2014
12a	FIRE & MTCI PERMIT COMMENTS	09-29-2014

100% CONSTRUCTION DOCUMENT SET

SEAL

10.9.14

Jonathan Cardello
Lic. # AR93391

ADD Inc Architecture Interiors Planning

One Biscayne Tower
Suite 1670
Two South
Biscayne Boulevard
Miami, Fl 33131
T. 305.482.8700
F. 305.482.8770
www.addinc.com
Lic. # AA26001507

Boston Miami

JOB NUMBER: 13036.00
CHECKED BY:
ISSUE DATE: FEBRUARY 18, 2014
SCALE: NTS

SHEET TITLE

DRAWING INDEX

SHEET NUMBER

G-001

COPYRIGHT ADD INC 2011

DRAWING LOG

DWG. NO.	TITLE	SCHEMATIC DESIGN 10.18.2013	DESIGN DEV. 11.22.2013	80% CD SET 02.05.2014	100% CD SET 02.18.2014	100% CD SET COORDINATION 03.05.2014	PERMIT REVIEW COMMENTS 03.14.2014	REVS 3–8 04.01.2014 – 04.23.2014	REVS 9 PHASE. PERMIT 05.30.2014	REVS 10 FIRE REVIEW COMMENTS 07.03.2014	REVS 11 P & Z COMMENTS 07.14.2014	REVS 12 FIRE & MTCI COMMENTS 08.21.2014	REVS 12a FIRE & MTCI COMMENTS 09.29.2014
A912	ENLARGED GUESTROOM PLANS TYPE B1		●	●	●			●					
A912a	ENLARGED GUESTROOM ELEVATIONS – TYPE B1		●	●	●								
A913	ENLARGED GUESTROOM PLANS TYPE B2		●	●	●			●					
A913a	ENLARGED GUESTROOM ELEVATIONS – TYPE B2		●	●	●								
A914	ENLARGED GUESTROOM PLANS TYPE B3		●	●	●			●					
A914a	ENLARGED GUESTROOM ELEVATIONS – TYPE B3		●	●	●								
A915	ENLARGED GUESTROOM PLANS TYPE B4		●	●	●			●					
A915a	ENLARGED GUESTROOM ELEVATIONS – TYPE B4		●	●	●			●					
A916	ENLARGED GUESTROOM PLANS – TYPE C1			●	●			●					
A916a	ENLARGED GUESROOM ELEVATIONS – TYPE C1 ADA			●	●								
A917	ENLARGED GUESTROOM PLANS – TYPE C2			●	●			●					
A917a	ENLARGED GUESTROOM ELEVATIONS – TYPE C2 – ADA			●	●								
A918	ENLARGED GUESTROOM PLAN – TYPE C3			●	●			●					
A918a	ENLARGED GUESTROOM ELEVATIONS – TYPE C3			●	●								
	S – STRUCTURAL												
S100	BASEMENT FOUNDATION PLAN		●	●	●		●	●	●				
S101	FIRST FLOOR PLAN		●	●	●		●	●	●				
S102	SECOND FLOOR FRAMING PLAN		●	●	●		●	●					
S103	THRID FLOOR FRAMING PLAN		●	●	●		●	●					
S104	ROOF FRAMING PLAN		●	●	●		●	●					
S301	EXTERIOR ELEVATIONS		●	●	●		●						
S302	EXTERIOR ELEVATIONS		●	●	●		●						
S303	EXTERIOR ELEVATIONS		●	●	●		●						
S401	TYPICAL NOTES SCHEDULES AND DETAILS		●	●	●		●	●	●				
S402	TYPICAL NOTES SCHEDULES AND DETAILS						●	●					
S501	SECTIONS		●	●	●		●	●	●				
S502	SECTIONS			●	●		●		●				
S503	SECTIONS			●	●		●	●	●				
	M – MECHANICAL												
M0.00	BASEMENT DEMOLITION PLAN		●	●	●		●						
M0.01	GROUND FLOOR DEMOLITION PLAN		●	●	●								
M0.02	SECOND FLOOR DEMOLITION PLAN		●	●	●								
M0.03	THIRD FLOOR DEMOLITION PLAN		●	●	●								
M1.00	BASEMENT MECHANICAL PLAN		●	●	●								
M1.01	GROUND FLOOR MECHANICAL PLAN		●	●	●		●	●	●			●	
M1.02	SECOND FLOOR MECHANICAL PLAN		●	●	●		●	●				●	
M1.03	THIRD FLOOR MECHANICAL PLAN		●	●	●		●	●	●			●	
M1.04	MECHANICAL ROOF PLAN		●	●	●								
M2.01	ENLARGED UNITS MECHAINCAL PLAN CAMPTON/POOL UNITS		●	●	●		●		●			●	
M2.02	ENLARGED UNITS MECHANICAL PLAN CAMPTON UNITS		●	●	●				●				
M2.03	ENLARGED UNITS MECHANICAL PLAN HADDON HALL NORTH WING			●	●		●	●					
M2.04	ENLARGED UNITS MECHANICAL PLAN HADDON HALL SOUTH WING		●	●	●							●	
M2.05	ENLARGED UNITS THIRD FLOOR MECHANICAL PLAN HADDON HALL COMMON AREA		●	●	●		●	●				●	
M2.06	ENLARGED UNITS MECHANICAL PLAN CAMPTON 2FL POOL 2FL & 3FL UNITS		●	●	●		●	●					
M2.07	ENLARGED UNITS MECHANICAL PLAN CAMPTON 2FL		●	●	●								
M2.08	ENLARGED UNITS MECHANICAL PLAN HADDON HALL 2FL & 3FL		●	●	●		●						
M2.09	ENLARGED UNITS MECHANICAL PLAN HADDON HALL 2FL & 3FL		●	●	●		●						
M4.01	MECHANICAL SYSTEM DX RISER SCHEMATIC DIAGRAM		●	●	●		●		●			●	
M5.01	MECHANICAL SCHEDULES		●	●	●		●		●			●	
M5.02	MECHANICAL SCHEDULES		●	●	●		●		●			●	
M6.01	MECHANICAL DETAILS		●	●	●		●	●	●			●	
	P – PLUMBING												
P0.00	BASEMENT DEMOLITION PLAN		●	●	●			●					
P0.01	GROUND FLOOR DEMOLITION PLAN		●	●	●								
P0.02	SECOND FLOOR DEMOLITION PLAN		●	●	●								
P0.03	THIRD FLOOR DEMOLITION PLAN		●	●	●								
P1.01	BASEMENT PLUMBING PLAN		●	●	●								
P1.02	GROUND FLOOR PLUMBING PLAN (PIPE BELOW SLAB)		●	●	●			●	●				●
P1.02a	GROUND FLOOR PLUMBING PLAN (PIPE AT CEILING)		●	●	●								
P1.03	SECOND FLOOR PLUMBING PLAN		●	●	●								
P1.04	THIRD FLOOR PLUMBING PLAN		●	●	●								
P1.05	PLUMBING ROOF PLAN		●	●	●			●					
P2.01	ENLARGED UNITS PLUMBING PLAN		●	●	●								
P2.02	ENLARGED UNITS PLUMBING PLAN		●	●	●								
P2.03	ENLARGED UNITS PLUMBING PLAN		●	●	●								
P2.04	ENLARGED UNITS PLUMBING PLAN		●	●	●								
P2.05	ENLARGED UNITS THIRD FLOOR PLUMBING PLAN		●	●	●								
P2.06	ENLARGED UNITS PLUMBING LAN			●	●		●						
P2.07	ENLARGED UNITS PLUMBING PLAN			●	●								
P2.08	ENLARGED UNITS PLUMBING PLAN			●	●								
P2.09	ENLARGED UNITS PLUMBING PLAN			●	●								
P2.10	ENLARGED BASEMENT PLUMBING PLAN		●	●	●				●				
P2.11	ENLARGED BAR & KITCHEN PLUMBING PLAN		●	●	●				●				●
P3.01	PLUMBING DETAILS		●	●	●				●				
P3.02	WATER DISTRIBUTION ISOMETRIC								●				
P3.03	STORM DRAIN ISOMETRIC							●					
P3.04	KITCHEN AND BAR WATER ISOMETRIC							●	●				
P4.01	PLUMBING DETAILS		●	●	●			●					
P4.02	PLUMBING DETAILS		●	●	●								
	FP – FIRE PROTECTION												
FP0.01	FIRE PROTECTION SITE PLAN		●	●	●			●				●	
FP1.00	BASEMENT FIRE PROTECTION PLAN		●	●	●			●					
FP1.01	GROUND FLOOR FIRE PROTECTION PLAN		●	●	●								
FP1.02	SECOND FLOOR FIRE PROTECTION PLAN		●	●	●								
FP1.03	THIRD FLOOR FIRE PROTECTION PLAN		●	●	●			●					
FP1.04	FIRE PROTECTION ROOF PLAN		●	●	●			●				●	●
FP2.01	1ST FL ENLARGED UNITS FIRE PROTECTION PLAN		●	●	●			●	●				●
FP2.02	1ST FL ENLARGED UNITS FIRE PROTECTION PLAN		●	●	●			●	●				●
FP2.03	1ST FL ENLARGED UNITS FIRE PROTECTION PLAN		●	●	●								
FP2.04	1ST FL ENLARGED UNITS FIRE PROTECTION PLAN		●	●	●			●					
FP2.05	2ND FL ENLARGED UNITS THIRD FLOOR FIRE PROTECTION PLAN		●	●	●			●				●	●
FP2.06	2ND FL ENLARGED UNITS FIRE PROTECTION PLAN		●	●	●							●	●
FP2.07	2ND & 3RD FL ENLARGED UNITS FIRE PROTECTION PLAN		●	●	●			●					
FP2.08	2ND & 3RD FL ENLARGED UNITS FIRE PROTECTION PLAN		●	●	●			●					
FP2.09	2NE & 3RD FL ENLARGED UNITS FIRE PROTECTION PLAN		●	●	●								

DRAWING LOG

DWG. NO.	TITLE	SCHEMATIC DESIGN 10.18.2013	DESIGN DEV. 11.22.2013	80% CD SET 02.05.2014	100% CD SET 02.18.2014	100% CD SET COORDINATION 03.05.2014	PERMIT REVIEW COMMENTS 03.14.2014	REVS 3–8 04.01.2014 – 04.23.2014	REVS 9 PHASE. PERMIT 05.30.2014	REVS 10 FIRE REVIEW COMMENTS 07.03.2014	REVS 11 P & Z COMMENTS 07.14.2014	REVS 12 FIRE & MTCI COMMENTS 08.21.2014	REVS 12a FIRE & MTCI COMMENTS 09.29.2014
FP5.01	DETAILS & NOTES FIRE PROTECTION		●	●	●			●					
	E – ELECTRICAL												
E0.00	ELECTRICAL GENERAL NOTES/LEGEND		●	●	●		●					●	
E0.01	BASEMENT DEMOLITION PLAN		●	●	●								
E0.02	GROUND FLOOR DEMOLITION PLAN		●	●	●			●					
E0.03	SECOND FLOOR DEMOLITION PLAN		●	●	●			●					
E0.04	THIRD FLOOR DEMOLITION PLAN		●	●	●			●					
E1.00	SITE PLAN ELECTRICAL		●	●	●			●				●	
E1.01	BASEMENT ELECTRICAL PLAN		●	●	●		●	●	●			●	
E1.02	GROUND FLOOR ELECTRICAL PLAN		●	●	●		●	●	●			●	●
E1.02A	GROUND FLOOR ELECTRICAL PLAN		●	●	●			●	●				
E1.03	SECOND FLOOR ELECTRICAL PLAN		●	●	●		●						
E1.04	THIRD FLOOR ELECTRICAL PLAN		●	●	●		●	●	●	●			
E1.05	ELECTRICAL ROOF PLAN		●	●	●		●	●	●			●	●
E2.01	ENLARGED UNITS ELECTRICAL PLAN		●	●	●		●	●				●	
E2.02	ENLARGED UNITS ELECTRICAL PLAN		●	●	●		●	●	●			●	
E2.03	ENLARGED UNITS ELECTRICAL PLANS		●	●	●		●					●	
E2.04	ENLARGED UNITS ELECTRICAL PLAN		●	●	●		●	●				●	
E2.05	ENLARGED UNITS THIRD FLOOR ELECTRICAL PLAN		●	●	●			●				●	
E2.06	ENLARGED UNITS ELECTRICAL PLAN		●	●	●		●	●				●	
E2.07	ENLARGED UNITS ELECTRICAL PLAN		●	●	●		●	●		●		●	
E2.08	ENLARGED UNITS ELECTRICAL PLAN		●	●	●		●	●				●	
E2.09	ENLARGED UNITS ELECTRICAL PLAN		●	●	●		●	●				●	
E2.10	ENLARGED CELLAR AND KITCHEN ELECTRICAL PLAN			●	●				●				
E2.11	ENLARGED ELECTRICAL ROOMS						●						
E3.01	ELECTRICAL RISER DIAGRAM		●	●	●		●		●			●	
E3.02	ELECTRICAL PANELS		●	●	●		●	●	●			●	
E3.03	ELECTRICAL PANELS		●	●	●			●	●			●	
E3.04	ELECTRICAL PANELS		●	●	●			●				●	
PH1.01	SITE PLAN EMERGENCY PHOTOMETRIC							●					
PH1.02	GROUND FLOOR EMERGENCY PHOTOMETRIC PLAN							●		●		●	
PH1.03	SECOND FLOOR PHOTOMETRIC PLAN							●					
PH1.04	THIRD FLOOR EMERGENCY PHOTOMETRIC PLAN							●					
	FA – FIRE ALARM												
FA1.01	BASEMENT FIRE ALARM PLAN		●	●	●			●	●	●			
FA1.02	GROUND FLOOR FIRE ALARM PLAN		●	●	●			●	●	●		●	●
FA1.03	SECOND FLOOR FIRE ALARM PLAN		●	●	●			●		●			●
FA1.04	THIRD FLOOR FIRE ALARM PLAN		●	●	●			●					●
FA1.05	FIRE ALARM ROOF PLAN		●	●	●								
FA2.00	FIRE ALARM RISER DIAGRAM		●	●	●			●					
	FS – FOOD SERVICE												
FS-0	TITLE SHEET								●				
FS-1	CELLAR EQUIPMENT FLOOR PLAN			●	●								
FS-2.0	1ST FLOOR OVERVIEW PLAN			●	●								●
FS-2	1ST FLOOR EQUIPMENT FLOOR PLAN			●	●								
FS-2.1	1ST FLOOR EQUIPMENT FLOOR PLAN			●	●				●				
FS-2.2	FOODSERVICE EQUIPMENT SCHEDULE			●	●				●			●	
FS-3	FOODSERVICE EQUIPMENT SCHEDULE												
FS-SC1	FOODSERVICE CELLAR SPECIAL CONDITIONS PLAN								●				
FS-SC2	FOODSERVICE 1ST FLOOR SPECIAL CONDITIONS PLAN								●				
FS-M1	FOODSERVICE HOOD VENTILATION DETAILS			●	●				●				
FS-M2	FOODSERVICE HOOD ELECTRICAL DETAILS			●	●				●				
FS-M3	FOODSERVICE HOOD FIRE SYSTEM DETAILS								●				
FS-P1	FOODSERVICE CELLAR PLUMBING ROUHG-IN PLAN								●				
FS-P2	FOODSERVICE 1ST FLOOR PLUMBING ROUGH-IN PLAN								●				
FS-P3	FOODSERVICE PLUMBING ROUGH-IN SCHEDULE								●				
FS-E1	FOODSERVICE CELLAR ELECTRICAL ROUGH-IN PLAN								●				
FS-E2	FOODSERVICE 1ST FLOOR ELECTRICAL ROUGH-IN SCHEDULE								●				
FS-E3	FOODSERVICE ELECTRICAL ROUGH-IN SCHEDULE								●				
FS-E3.1	FOODSERVICE ELECTRICAL ROUGH-IN SCHEDULE								●				
FS-R1	FOODSERVICE REFRIGERATION DETAILS								●				
FS-R2	FOODSERVICE REFRIGERATION DETAILS								●				
	BACK COVER			●	●				●				

MTCI
PRIVATE PROVIDER SERVICES, LLC

	REVIEWER INITIALS	DATE REVIEWED
BUILDING	EM	11-13-14
STRUCTURAL		
MECHANICAL		
ELECTRICAL		
PLUMBING		
SITE CIVIL		

APPROVED MIAMI BEACH FIRE DEPARTMENT

HADDON HALL
1500 COLLINS AVE
MIAMI BEACH, FL

KEYPLAN N.T.S.

REVISIONS

NO.	DESCRIPTION	ISSUE DATE
1	PROGRESS TO 100% CD	02-18-2014
10	FIRE REVIEW COMMENTS	07-03-2014
12	FIRE & MTCI PERMIT COMMENTS	08-21-2014
12a	FIRE & MTCI PERMIT COMMENTS	09-29-2014

100% CONSTRUCTION DOCUMENT SET

SEAL

10-9-14
Jonathan Cardello
Lic. # AR93391

ADD Inc Architecture Interiors Planning

One Biscayne Tower
Suite 1670
Two South
Biscayne Boulevard
Miami, Fl 33131
T. 305.482.8700
F. 305.482.8770
www.addinc.com
Lic. # AA26001507
Boston Miami

JOB NUMBER: 13036.00
CHECKED BY:
ISSUE DATE: FEBRUARY 18, 2014
SCALE: NTS

SHEET TITLE

DRAWING INDEX

SHEET NUMBER

G-001a

COPYRIGHT ADD INC 2011

PLAN NOTES

1. ALL WORK TO BE NEW U.O.N.
2. ALL WORK SHALL COMPLY WITH FEDERAL, STATE, AND LOCAL BUILDING CODES AND REGULATIONS.
3. ANY CONFLICTS BETWEEN SITE CONDITIONS AND DRAWINGS SHALL BE BROUGHT TO THE IMMEDIATE ATTENTION OF THE ARCHITECT/DESIGNER.
4. ALL DOORS IN FRAME WALL TO BE 4" FROM NEAREST PERPENDICULAR PARTITION, U.O.N. ALL DOORS IN CMU WALLS TO BE 8" FROM NEAREST PERPENDICULAR PARTITION, U.O.N.
5. CENTER PARTITIONS ON WINDOW MULLIONS PERPENDICULAR TO PERIMETER WALL, U.O.N.
6. TEMPERED GLASS TO BE USED IN ALL LOCATIONS AS REQUIRED BY CODE.
7. ALL DOOR #'S TO CORRESPOND WITH ROOM #'S, U.O.N .
8. REVIEW LAYOUTS FOR PARTITIONS IN FIELD WITH ARCHITECT/DESIGNER PRIOR TO START OF CONSTRUCTION.
9. MAINTAIN ACOUSTIC AND RATED FIRE/SMOKE DESIGN INTENT. ALL PENETRATIONS ARE TO BE SEALED TO MAINTAIN FIRE/SMOKE RATING AND ACOUSTICAL RATING.
10. PROVIDE FIRE EXTINGUISHERS (WITH CABINETS) IN QUANTITIES AND LOCATIONS ON DWGS.
11. COORDINATE BLOCKING REQUIREMENTS AND LOCATIONS WITH ELEVATIONS AND DETAILS. ALL BLOCKING TO BE FIRE TREATED.
12. ALL PARTITIONS, COLUMN ENCLOSURES, FURRED WALLS, ETC. EXTENDING THROUGH THE CEILING MUST BE FULLY CAPPED WITH GWB (OR STUD TRACK) WHEN GWB DOES NOT EXTEND TO DECK ABOVE – CONCEALED AREAS WITHIN WALLS CANNOT BE OPEN TO PLENUM AREAS.

GENERAL DEMOLITION NOTES

1. NOTIFY THE ARCHITECT OF ANY UNEXPECTED FIELD CONDITION OR ANY DISCREPANCY BEFORE PROCEEDING. GC IS TO COORDINATE THE COMPLETE SCOPE OF WORK FOR DEMO WITH CONSTRUCTION DOCUMENTS.
2. NO MAIN FRAME OR STRUCTURAL MEMBERS ARE TO BE MODIFIED, ALTERED OR CUT WITHOUT THE APPROVAL OF THE ARCHITECT AND STRUCTURAL ENGINEER.
3. WHEN DEMOLISHING MATERIALS NEXT TO ABUTTING MATERIALS, CARE MUST BE TAKEN TO AVOID DAMAGING ELEMENTS TO REMAIN. G.C. WILL BE RESPONSIBLE FOR ALL REPAIRS.
4. PROVIDE STRICT CONTROL OF JOB CLEANING AND PREVENT DUST AND DEBRIS FROM EMANATING FROM DEMOLITION CONSTRUCTION AREA.
5. COORDINATE DEBRIS REMOVAL WITH OWNER. ALL DEBRIS REMOVAL MUST BE PREFORMED IN ACCORDANCE WITH BUILDING MANAGEMENT PROCEDURES AND DERM REQUIREMENTS.
6. FIRE ALARM DEVICES (SMOKE DETECTORS AND HORNS) WITHIN DEMO SPACE SHALL REMAIN CONNECTED TO EXISTING SYSTEMS. SECURE DEVICES AS NECESSARY TO KEEP FROM HANGING FREELY UPON REMOVAL OF WALLS AND CEILING.
7. DEMOLITION IS NOT NECESSARILY LIMITED TO WHAT IS SHOWN ON DRAWINGS. THE INTENT IS TO INDICATE THE GENERAL SCOPE OF DEMOLITION REQUIRED.
8. DISCONNECT AND MAKE SAFE ALL ELECTRICAL EQUIPMENT AND ASSOCIATED BOXES, DEVICES AND WIRING IDENTIFIED FOR REMOVAL.
9. RELOCATION OF ANY EQUIPMENT, CABLING SWITCHES, AND CONDUIT PERTAINING TO DATA/COMMUNICATIONS SHALL BE VERIFIED WITH TELEPHONE COMPANIES, SERVICES OWNER OR TENANT AS REQUIRED.
10. ALL STAIRWAYS MUST REMAIN ACCESSIBLE AT ALL TIMES DURING DEMOLITION PER 207 FBC 3310. PROVIDE TEMPORARY STAIRWAY FLOOR NUMBERS SIGNS PER 2007 FBC 3310.3.
11. IF APPLICABLE, ALL EXISTING FLOOR MOUNTED OUTLETS TO BE REMOVED SHALL BE CAPPED OFF TO THE NEAREST JUNCTION BOX. FILL AND LEVEL FLOOR ACCEPT NEW FLOOR COVERINGS.
12. THE CONTRACTOR SHALL INSPECT THE EXISTING FIELD CONDITIONS AT THE SITE PRIOR TO THE START OF ANY WORK TO DETERMINE WHAT EFFECT THTE EXISTING CONDITIONS WILL HAVE ON HIS WORK. POTENTIAL PROBLEM AREAS SHALL BE BROUGHT TO THE ATTN. OF THE ARCHITECT AND/OR ENGINEER IMMEDIATELY.
13. SHUTDOWN OF EXISTING SYSTEMS FOR CONNECTION TO EXISTING SERVICES SHALL BE COORDINATED WITH THE CONSTRUCTION MANAGER AND BUILDING OWNER. THE CONTRACTOR SHALL SUBMIT REQUESTS, WHERE THEY AFFECT THE OPERATION OF THE BUILDING SYSTEMS, AT LEAST ONE WEEK IN ADVANCE OF ANY REQUIRED SHUTDOWN. THE ACTUAL SHUTDOWN PERIOD SHALL BE AS SHORT AS POSSIBLE AND AT A TIME MUTUALLY AGREEABLE TO THE BUILDING OWNER AND THE CONSTRUCTION MANAGER.
14. REMOVE ALL MISCELLANEOUS UNUSED CLIPS, ANCHORS, ETC. FROM MASONRY, WALLS, COLUMNS, BEAMS, AND DECKS.
15. AS DEMOLITION OCCURS CONTRACTOR SHALL FIELD VERIFY ALL CLEAR DIMENSIONS BEFORE ORDERING ANY MILLWORK

REFLECTED CEILING PLAN LEGEND

- 2 X 2 SUSPENDED CEILING GRID SYSTEM
- GWB CEILING/SOFFIT
- UNDERSIDE OF SLAB W/ SPRAYED ACOUSTIC FINISH
- UNFINISHED CONCRETE CEILING
- WOOD PANEL CEILING
- WOOD PLANK CEILING
- FABRIC PANEL CEILING
- 9'-0" / ACT – CEILING HEIGHT KEY: CEILING HEIGHT – AFF; CEILING TYPE
- 4' FLUORESCENT STRIP
- 1' X 4' FLUORESCENT STRIP
- 1' X 4' PENDANT
- 2' X 2' FLUORESCENT
- 2' X 4' FLUORESCENT
- 4' TRACK TRIANGLES INDICATE # OF FIXTURES
- DOWNLIGHT
- WALLWASHER
- PENDANT FIXTURE
- WALL SCONCE
- EMERGENCY LIGHT BATERY POWERED WALL MOUNTED
- 24" – BROADWAY STRIP LIGHT # DENOTES FIXTURE LENGTH
- SURFACE MOUNTED LIGHT FIXTURE
- PS – PROJECTION SCREEN
- WINDOW TREATMENT CEILING MOUNTED
- WIRE TRAY
- OS – OCCUPANCY SENSOR
- EXIT SIGN ARROWS INDICATE DIRECTION
- EXIT SIGN – WALL MOUNTED ARROWS INDICATE DIRECTION
- S – SMOKE DETECTOR
- S – SPEAKER
- H – HEAT DETECTOR
- SPRINKLER
- SPRINKLER – DELUGE
- SPRINKLER – CONCEALED
- LINEAR DIFFUSER
- SUPPLY DIFFUSER
- RETURN AIR GRILLE
- WA – WIRELESS ACCESS W/ DATA CONNECTION
- CAM – SECURITY CAMERA
- AP-1 – HVAC ACCESS PANEL

POWER & SIGNAL PLAN LEGEND

- OUTLET – DUPLEX
- OUTLET – DUPLEX WITH HALF SWITCH CONTROLLED
- D – OUTLET – DEDICATED DUPLEX
- D – OUTLET – DEDICATED TO APPLIANCE
- DM – OUTLET – DEDICATED TO MICROWAVE
- DS – OUTLET – DESIGNATED COMPUTER DUPLEX
- GFI – OUTLET – GROUND FAULT INTERRUPTOR
- OUTLET – QUADRAPLEX
- OUTLET QUADRAPLEX EXTERIOR WEATHER PROTECTED
- CABLE FOR TELEVISION
- INT – INTERNET CONNECTION
- OUTLET – SPECIAL PURPOSE
- OUTLET – VOICE
- W – OUTLET – VOICE WALL MOUNTED
- OUTLET – DATA
- OUTLET – VOICE/DATA
- OUTLET – FLOOR: DUPLEX
- OUTLET – FLOOR: DUPLEX WITH HALF SWITCH CONTROLLED
- OUTLET – FLOOR: VOICE
- OUTLET – FLOOR: VOICE/DATA
- 2,1 – OUTLET – FLOOR: COMBINATION POWER & VOICE # INDICATES QTY. OF OUTLETS RESPECTIVELY
- WIRE MOLD POWER & SIGNAL AS INDICATED
- SWITCH
- 3 – SWITCH "3" – 3 WAY "4" – 4 WAY
- D – DIMMER SWITCH
- S – SPEAKER
- J 2,1 – OUTLET – FLOOR: COMBINATION POWER & VOICE # INDICATES QTY. OF OUTLETS RESPECTIVELY FLOOR-MOUNTED JUNCTION BOX TO BE CONCEALED FROM VIEW BY CASEWORK
- PG – AUTOMATIC DOOR OPENER PUSH BUTTOM
- J – JBOX
- J CLG – JBOX CEILING MOUNTED
- HB – HOSE BIB
- F – FIRE HORN
- FS – FIRE HORN W/ STROBE
- FIRE STROBE
- F – FIRE PULL STATION
- FAA – FIRE ALARM ANNUNCIATOR
- B – DOOR BUZZER
- CR – CARD READER
- C – CLOCK & OUTLET
- DC – DOOR CONTACT DEVICE
- OS – OCCUPANCY SENSOR WALL MOUNTED
- SECURITY CAMERA
- T – THERMOSTAT
- 10 – EQUIPMENT KEY
- FURNITURE/WORKSTATION OUTLINE
- DOORBELL IN ADA UNITS ONLY
- MSDE PANEL
- IC – INTERCOM
- DA – DOOR ALARM
- DR – DOOR RELEASE
- G – GAS LINE
- VOICE, DATA & VIDEO – WALL MOUNT
- VOICE, DATA & VIDEO – FLOOR MOUNT
- VIDEO – WALL MOUNT
- VIDEO – FLOOR MOUNT
- WA – WIRELESS ACCESS
- GD – GARBAGE DISPOSAL
- S – SMOKE DETECTOR
- FLOOR QUAD
- OUTLET – CEILING

FINISH PLAN LEGEND

- C-1 – PAINTED CONCRETE
- R-1 – LINOLEUM FLOORING
- R-2 – RUBBER FLOORING
- R-3 – RUBBER FLOORING
- PT-1 – PORCELAIN TILE W/ RINGS 2" x4"
- PT-2 – PORCELAIN TILE W/ RINGS 2" x2"
- PT-3 – PORCELAIN TILE LIGHT GLOW 1" x 2"
- PT-4 – PORCELAIN TILE DARK GLOW 1" x 2"
- PT-5 – PORCELAIN TILE GOLD GLOW 1" x 2"
- PT-6 – PORCELAIN TILE GLAMOUR: BATH FLOOR 1" X 1"
- PT-7 – PORCELAIN TILE
- T-1 – TERRAZZO
- CT-1 – CARPET TILE
- VCT-1 – VINYL COMPOSTION TILE
- VCT PLACEMENT OF LINES REFLECTS ACTUAL LAYOUT AND SIZE
- VB 1 – BASE FINISH
- P 1 – WALL FINISH
- PLAM 1 – HORIZONTAL FINISH MATERIAL
- CG-1 – CORNER GUARD – SEE DETAIL 2/A910

FINISH PLAN NOTES

ALL WALLS TO BE PAINTED PT-1, U.O.N.
1. ALL FLOORING TRANSITIONS AT DOOR OPENING TO OCCUR UNDERNEATH DOOR, U.O.N.
2. FLOOR FINISHES AND WALL BASE TO CONTINUE UNDER COUNTER TOPS, ANY MILLWORK OPENINGS,
3. AND HC KITCHEN SINK CABINETS.
PROVIDE TRANSITIONS STRIPS AT ALL LOCATIONS WHERE CARPET AND TILE/SHEET FLOORING MEET.
4. VERIFY COLOR WITH ARCHITECT PRIOR TO INSTALLATION.
VINYL BASE TO BE COVE AT VCT/SHEET FLOORING AREAS.
5. VERIFY FLOOR FINISH LAYOUT WITH ARCHITECT PRIOR TO INSTALLATION. (TILE LAYOUT, SEAMING
6. DIAGRAMS, ETC.)
DOORS TO BE PAINTED PER FINISH SCHEDULE.
7. FRAMES TO BE PAINTED PER FINISH SCHEDULE.
ALL GWB SOFFITS TO BE PAINTED PT-1, U.O.N.
8. AT AREAS OPEN TO DECK ABOVE, DECK AND ALL ITEMS EXPOSED TO VIEW TO BE PAINTED PT-1, U.O.N.
9. ALL INTERIOR FINISHES SHALL COMPLY WITH NFPA 101, SECTION 10.2

4

GENERAL LEGEND

- DETAIL KEY: 1 / A901 – DETAIL NUMBER / DRAWING NUMBER
- ROOM KEY: ROOM NAME / 13088 – ROOM NAME / ROOM NUMBER
- CEILING FINISH KEY: 9'-0" / ACT – CEILING HEIGHT / MATERIAL
- FINISH KEY: VB / 1 – FINISH TYPE / FINISH NUMBER
- ELEV 25'-0" – SPOT ELEVATION KEY
- ALIGN KEY – ALIGN FINISH SURFACES
- LIMIT OF WORK
- MATCH LINE SEE X/XXXX – MATCH LINE
- 0'-0" – DIMENSION LINE
- COLUMN LINE INDICATORS
- FLOOR DRAIN
- ROOF DRAIN
- N.I.C. SHADING
- WINDOW TREATMENT
- 1 HOUR FIRE RESISTIVE RATED CONSTRUCTION
- 2 HOUR FIRE RESISTIVE RATED CONSTRUCTION
- 3 HOUR FIRE RESISTIVE RATED CONSTRUCTION
- 4 HOUR FIRE RESISTIVE RATED CONSTRUCTION
- EXISTING PARTITION TO REMAIN
- NEW PARTITION
- NEW CMU PARTITION
- 1 / A301 – BUILDING SECTION KEY
- ELEVATION KEY 22/A802 – DRAWING NUMBER / ELEVATION NUMBER
- ELEVATION KEY 4 A802 2 – MULTIPLE ELEVATIONS
- ENLARGED PLAN KEY 1 / A901 – ENLARGED PLAN NUMBER / DRAWING NUMBER
- REVISION KEY 1 – REVISION NUMBER
- 10 – KEYNOTE INDICATOR
- 10 – WINDOW TYPE KEY
- 8A – PARTITION TYPE
- 1038 – DOOR NUMBER
- 1038 – NEW BI-FOLD DOOR
- HB – HOSE BIB
- S – SEALANT & BACKER ROD
- S – SEALANT
- FE – FIRE EXTINGUISHER WALL MOUNTED
- FEC – FIRE EXTINGUISHER RECESSED
- NEW PARTITION
- LOW HEIGHT PARTITION
- N.I.C. SHADING
- EXISTING STRUCTURE

REFLECTED CEILING PLAN NOTES

NEW CEILINGS
1. ALL WORK TO BE NEW U.O.N.
2. ALL DOWNLIGHTS, WALLWASHERS, SMOKE DETECTORS, SPRINKLER HEADS, EXIT SIGNS, ETC. TO BE CENTERED IN CEILING TILE, U.O.N.
3. WALLWASHERS AND DOWNLIGHTS TO BE CENTERED, IN BOTH DIRECTIONS, IN ALL GWB SOFFITS, U.O.N.
4. ALL DIMENSIONS OF FIXTURES, DEVICES, SPRINKLER HEADS, ETC. ARE TO CENTERLINE OF FIXTURE, U.O.N. WHERE ITEMS ARE IN LINE, CENTERLINE OF ITEMS OR GROUP OF ITEMS TO ALIGN, U.O.N.
5. ALL MEP–FP DEVICE LOCATIONS NOT SHOWN ON DRAWINGS, OR IN CONFLICT WITH MEP–FP DRAWINGS, ARE TO BE COORDINATED WITH ARCHITECT PRIOR TO INSTALLATION.
6. CONTRACTOR TO COORDINATE LOCATIONS OF ALL CEILING ELEMENTS AND PROVIDE COMPLETE COORDINATION DRAWINGS FOR THE ARCHITECT AND ENGINEER'S REVIEW FOR APPROVAL.
7. CONTRACTOR TO VERIFY ALL PENDANT FIXTURE HEIGHTS AND LOCATIONS WITH ARCHITECT PRIOR TO INSTALLATION.
8. LAYOUT IS FOR INFORMATION ONLY – SEE THE ELECTRIC DRAWINGS FOR QUANTITY AND FIXTURE LOCATIONS.
9. SEE MEP–FP DRAWINGS FOR LOCATIONS OF SMOKE DETECTORS, SPRINKLER HEAD, EXIT SIGNS, ETC.

EXISTING CEILINGS
10. EXISTING CEILINGS TO REMAIN UNDISTURBED.
11. NEW SOFFIT BEAMS TO BE ADDED WITHOUT AFFECTING THE EXISTING CEILING

POWER & SIGNAL PLAN NOTES

1. ALL WORK TO BE NEW U.O.N.
2. MOUNTING HEIGHTS OF ALL DEVICES ARE SHOWN ON TYPICAL POWER & SIGNAL MOUNTING HEIGHT KEY, U.O.N. REFER TO A–003 DRAWINGS.
3. ALL OUTLETS AND JACKS TO BE CENTERED ON WALL, U.O.N.
4. LOCATION OF ALL POWER & SIGNAL DEVICES ARE TO BE COORDINATED FROM ARCHITECTURAL DRAWINGS. NOTIFY ARCHITECT OF ANY DISCREPANCIES BETWEEN ARCHITECTURAL AND ELECTRICAL DRAWING PRIOR TO INSTALLATION. REFER TO ENGINEER'S DRAWINGS FOR OTHER REQUIREMENTS.
5. ALL DIMENSIONS ARE FROM FACE OF FINISHED WALL TO CENTERLINE OF SINGLE DEVICE OR CENTER OF GROUP OF DEVICES.
6. ALL OUTLETS TO BE LOCATED AS INDICATED ON PLANS, U.O.N. PROVIDE BRIDGE RACKS AS NEEDED TO ACHIEVE INDICATED LOCATIONS.
7. COORDINATE ALL FLOOR CORE LOCATIONS WITH ARCHITECT, FURNITURE VENDOR, AND OWNER PRIOR TO CORING. COORDINATE LOCATION SO AS NOT TO INTERFERE WITH STRUCTURAL REINFORCING (DO NOT CUT THROUGH REINFORCING OR BEAMS).
8. ALL OUTLETS LOCATED ABOVE OR BELOW THE COUNTER TOPS IN KITCHEN, COFFEE AREAS, TOILET ROOMS, ETC (WET AREAS) SHALL BE GFI AS PER CODE (REFER TO ELECTRICAL DRAWINGS).
9. STAGGER ALL DEVICES SHOWN BACK TO BACK ON OPPOSITE SIDES OF SHARED PARTITIONS. DEVICE SHALL NOT OCCUPY THE SAME STUD CAVITY.
10. GROUP MULTIPLE DEVICES (POWER/SIGNAL) ON WALL TO BE GROUPED NOT MORE THAN 6" APART.
11. MULTIPLE SWITCH OR OUTLET DEVICES IN ONE LOCATION SHALL BE INSTALLED IN A COMMON MULTI–GANG BOX WITH A COMMON FACEPLATE, AS ALLOWED BY CODE.
12. REFER TO ENGINEERING DRAWINGS FOR THERMOSTAT, FIRE HORN, STROBE LIGHT, AND PULL STATION LOCATIONS AND REQUIREMENTS, U.O.N. VERIFY LOCATIONS WITH ARCHITECT PRIOR TO CONSTRUCTION.
13. LOCATE SWITCHES 6" CLEAR OF THE EDGE OF DOOR FRAME, U.O.N. AT DOUBLE DOORS OR DOORS WITH SIDELIGHTS, LOCATE SWITCHES 3'–6" FROM DOOR AT SIDE WALL, U.O.N.
14. ALL MEP–FP DEVICES AND FIRE EXTINGUISHER CABINETS ARE TO BE ALIGNED ON CENTERLINE, U.O.N.
15. WHERE SWITCHES FOR DEVICES OTHER THAN LIGHTS (I.E. EXHAUST FAN, PROJECTION SCREEN) ARE ADJACENT TO LIGHT SWITCHES, LOCATE LIGHT SWITCHES CLOSEST TO THE ENTRY DOOR.
16. FINISHES FOR COVER PLATES TO BE WHITE U.O.N. FINISHES FOR DEVICES TO BE WHITE U.O.N.
17. REFER TO RCP FOR CEILING MOUNTED OUTLETS.
18. REFER TO ACCESS CONTROL DRAWINGS FOR CARD READER LOCATIONS.

ROOM UNIT PLAN NOTES

- K – KING BED ROOM
- DQ – DOUBLE QUEEN BED ROOM
- Q – QUEEN BED ROOM

MTCI
PRIVATE PROVIDER SERVICES, LLC
Construction Plans Review, Inspections, Training & Consulting

	REVIEWER INITIALS	DATE REVIEWED
BUILDING	EM	3-10-14
STRUCTURAL		
MECHANICAL		
ELECTRICAL		
PLUMBING		
SITE CIVIL		

ABBREVIATIONS

AB – ANCHOR BOLT
AC – AIR CONDITIONING
ACT – ACOUSTICAL CEILING TILE
AD – ACCESS DOOR
AFF – ABOVE FINISHED FLOOR
AH – AIR HANDLER
AL – ALUMINUM
ANOD – ANODIZED
APP – APPROXIMATELY
ARCH – ARCHITECTURAL

BETW – BETWEEN
BLDG – BUILDING
BLKG – BLOCKING
BO – BY OTHERS
BOT – BOTTOM
BP – BUILDING PAPER
BR – BRASS
BRZ – BRONZE
BU – BUILT UP

C – COURSE
℄ – CENTERLINE
CAB – CABINET
CPT – CARPET
CHR – CHROME
CI – CAST IRON
CJ – CONTROL JOINT
CLG – CEILING
CLR – CLEAR(ANCE)
CMU – CONCRETE MASONRY UNITS
COL – COLUMN
COMP – COMPRESSIBLE
CONC – CONCRETE
CONT – CONTINUOUS
COP – COPPER
CT – CERAMIC TILE
CW – CURTAIN WALL

Ø – DIAMETER
DEMO – DEMOLITION
DTL – DETAIL
DIM – DIMENSION
DN – DOWN
DR – DOOR
DWG – DRAWING

E – EAST
EA – EACH
EB – EXPANSION BOLT
EJ – EXPANSION JOINT
EL – ELEVATION
ELEC – ELECTRICAL
ELEV – ELEVATOR
EQ – EQUAL
ESB – EXTERIOR SOFFIT BOARD
ETR – EXISTING TO REMAIN
EWC – ELECTRIC WATER COOLER
EXIST – EXISTING
EXP – EXPANSION
EXT – EXTERIOR

FD – FLOOR DRAIN
FE – FIRE EXTINGUISHER
FEC – FIRE EXTINGUISHER CABINET
FF – FABRIC FLASHING
FIN – FINISHED
FL – FLOOR
FLUOR – FLUORESCENT
FOC – FACE OF CONCRETE
FOF – FACE OF FINISH
FR – FIRE RESISTANT
FTR – FIN TUBE RADIATION
FV – FIELD VERIFY
FWC– FABRIC WALL COVERING

GA – GAUGE
GALV – GALVANIZED
GC – GENERAL CONTRACTOR
GL – GLASS
GWB – GYPSUM WALL BOARD

HC – HANDICAPPED
HDW – HARDWARE
HT – HEIGHT
HM – HOLLOW METAL
HORIZ – HORIZONTAL
HP – HIGH POINT
HVAC – HEAT, VENTILATION & A.C.

ID – INSIDE DIAMETER
INSUL – INSULATION
INT – INTERIOR

JNT – JOINT

KD – KNOCKED DOWN

L – LENGTH

LAM – LAMINATE
LAV – LAVATORY
LCC– LEAD COATED COPPER
LH – LEFT HAND
LP – LOW POINT
LT – LIGHT
LVR – LOUVER
MAX – MAXIMUM
MDO – MEDIUM DENSITY OVERLAY
MECH – MECHANICAL
MF – METAL FLASHING
MFR – MANUFACTURER
MIN – MINIMUM
MO – MASONRY OPENING
MS – METAL STUD
MTL – METAL

N – NORTH
NIC – NOT IN CONTRACT
NTS – NOT TO SCALE

OA – OVERALL
OC – ON CENTER
OD – OUTSIDE DIAMETER
OH – OVERHEAD
OPG – OPENING
OPHD – OPPOSITE HAND
OPP – OPPOSITE

P&S – POWER & SIGNAL PLAN
PAR – PARALLEL
PC – PRECAST
PERF – PERFORATED
PERP – PERPENDICULAR
PLAM – PLASTIC LAMINATE
PM – PRESSED METAL
PNL – PANEL
PT – PRESSURE TREATED
PTD – PAINTED
PWD – PLYWOOD

QT – QUARRY TILE

R – RADIUS OR (STAIR) RISERS
RAD – RADIATOR
RCP – REFLECTED CEILING PLAN
RD – ROOF DRAIN
REINF – REINFORCING
REQD – REQUIRED
REQMTS – REQUIREMENTS
RH – RIGHT HAND
RM – ROOM
RO – ROUGH OPENING

S – SOUTH
SAFB – SOUND ATTENUATION FIBER BLANKET
SCR – SCREW
SECT – SECTION
SHT – SHEET
SF – SQUARE FOOT
SIM – SIMILAR
SP – SPRAY PARTICLE PAINT
SPEC – SPECIFICATIONS
SS – STAINLESS STEEL
STD – STANDARD
STL – STEEL
STR – STRUCTURAL
SVF – SHEET VINYL FLOORING
S4S – SURFACE FOUR SIDES

T – TREADS (STAIRS)
TB – TOGGLE BOLT
TBD – TO BE DETERMINED
TDO – THERMOSET DECORATIVE OVERLAY (MELAMINE)
TEMP – TEMPERED
TEL – TELEPHONE
THI – THICK
T&G – TONGUE AND GROOVE
TO – TOP OF
TOC – TOP OF CONCRETE
TOM – TOP OF MASONRY
TOS – TOP OF STEEL
TOW – TOP OF WALL
TPH – TOILET PAPER HOLDER
TRANS – TRANSLUCENT
TYP – TYPICAL

UL – UNDERWRITERS LABORATORY
UON – UNLESS OTHERWISE NOTED
UV – UNIT VENTILATOR

VB – VAPOR BARRIER OR VINYL BASE
VCT – VINYL COMPOSITION TILE
VEN – VENEER
VER – VERIFY
VERT – VERTICAL
VEST – VESTIBULE
VIF – VERIFY IN FIELD
VWC – VINYL WALL COVERING

W – WEST
WC – WATER CLOSET
WD – WOOD
W/ – WITH
W/O – WITHOUT
WGL – WIRED GLASS
WP – WORKING POINT
WTH – WIDTH

APPROVED MIAMI BEACH FIRE DEPARTMENT

HADDON HALL
1500 COLLINS AVE

MIAMI BEACH, FL

KEYPLAN N.T.S.

REVISIONS

NO.	DESCRIPTION	ISSUE DATE
1	FIRE REVIEW COMMENTS	04-01-2014

100% CONSTRUCTION DOCUMENT SET

SEAL

5-22-14
Jonathan Cardello
Lic. # AR93391

ADD Inc Architecture Interiors Planning

One Biscayne Tower
Suite 1670
Two South
Biscayne Boulevard
Miami, Fl 33131
T. 305.482.8700
F. 305.482.8770
www.addinc.com
Lic. # AA26001507

Boston Miami

JOB NUMBER: 13036.00
CHECKED BY:
ISSUE DATE: FEBRUARY 18, 2014
SCALE: REFER TO SHEET

SHEET TITLE

LEGENDS, ABBREVIATIONS, AND NOTES

SHEET NUMBER

G002

COPYRIGHT ADD INC 2011

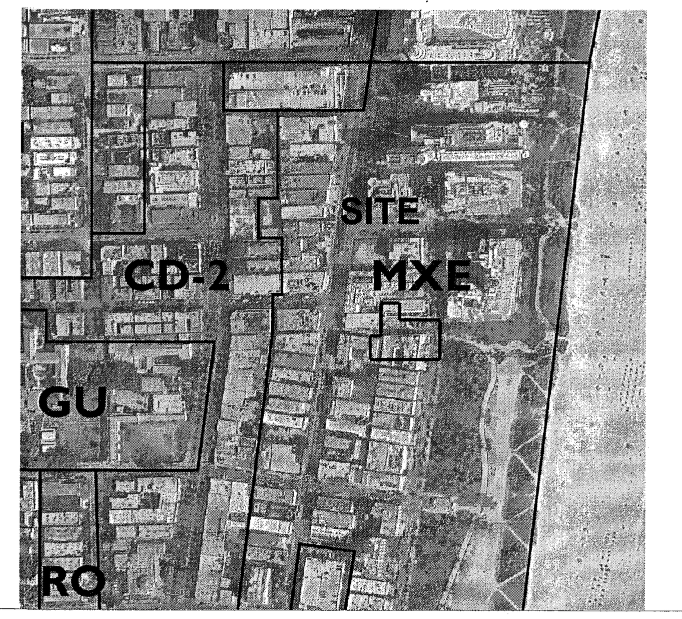

Project Information

Site Information

Net Lot Area		Remarks
Haddon Hall	31,570 SF	
Haddon Hall Pool Suites	10,875 SF	
Campton Bldg	18,000 SF	
Total	**60,445 SF**	

Existing Zoning Designation		Remarks
Haddon Hall	MXE	
Haddon Hall Pool Suites	MXE	
Campton Bldg	CD2	

Minimum Unit Size		Remarks
Haddon Hall	200 SF	*See Sec. 142-545*
Haddon Hall Pool Suites	200 SF	
Campton Bldg	15%: 300-335 SF 85%: 335+ SF	Variance #1: Select number of units in historic bldg that are not being modified

Parking Analysis

Number of Units	Existing	Proposed	Remarks
Haddon Hall	116 Units	116 Units	
Haddon Hall Pool Suites	7 Units	12 Units	
Campton Bldg	44 Units	34 Units	
Total	**168 Units**	**162 Units**	

Parking	*Required	**Existing	Proposed	Remarks
	5 spaces	14 spaces	0 spaces	**Section 130-31(b) of the City Code eliminates off-street parking requirements for contributing structures within a local historic district.* *** 14 existing parking spaces are non-conforming*

Floor Area Ratio (FAR)

Maximum FAR	Allowed		Existing		Proposed		Remarks
Haddon Hall	2.00	63,140 SF	1.36	43,084 SF	1.36	43,084 SF	*See Sec.142-545*
Haddon Hall Pool Suites	2.00	21,750 SF	0.37	3,980 SF	0.55	5,970 SF	
Campton Bldg	1.50	27,000 SF	0.94	16,928 SF	0.92	16,633 SF	*See Sec. 142-306*

Existing Area Breakdown

Haddon Hall	Existing FAR	Proposed FAR	Remarks
Ground Floor	14,624 SF	14,624 SF	
Second Floor	14,230 SF	14,230 SF	
Third Floor	14,230 SF	14,230 SF	
Fourth Floor Rooftop		500 SF	
Total	**43,084 SF**	**43,584 SF**	
Haddon Hall Pool Suites			
Ground Floor	1,990 SF	1,990 SF	
Second Floor	1,990 SF	1,990 SF	
Third Floor		1,990 SF	
Total	**3,980 SF**	**5,970 SF**	
Campton Bldg			
Ground Floor	8,723 SF	8,258 SF	
Second Floor	8,205 SF	8,205 SF	
Total	**16,928 SF**	**16,463 SF**	
Total	**63,992 SF**	**66,017 SF**	

Setbacks

Haddon Hall	Required	Existing	Proposed	Remarks
Front (Collins Ave)				*See Sec. 142 -547*
Pedestal (non-oceanfront)	20'-0"	25'-0"	25'-0"	
Side, Interior (North)				
Pedestal (non-oceanfront)	5'-0"	4'-9"	4'-9"	
Side, Interior (South)				
Pedestal (non-oceanfront)	5'-0"	7'-6"	7'-6"	
Rear (West)				
Pedestal (non-oceanfront)	10'-0"	0'	N/A	
Haddon Hall Pool Suites				*See Sec. 142 -547*
Side, Interior (North)				
Pedestal (non-oceanfront)	5'-0"	0'	0'	Variance #3: Existing pool platform with 0' setback to remain and be repaved Variance #4: New trellis at NE corner of pool with a 4' setback to north property line.
Side, Interior (South)				
Pedestal (non-oceanfront)	5'-0"	N/A	N/A	
Side, Interior (East)				
Pedestal (non-oceanfront)	5'-0"	0'	0'	
Rear, Interior (West)				
Pedestal (non-oceanfront)	10'-0"	10'-5"	4'-0"	Variance #2: New stairs along west property line with a 4' setback. Variance #5: New trellis at NE corner of pool with a 4' setback to west property line. *See Sec. 142-307*
Campton Bldg				
Front (Washington Ave)				
Pedestal (non-oceanfront)	0'-0"	60'-0"	60'-0"	
Side, Interior (North)				
Pedestal (non-oceanfront)	0'-0"	5'-0"	5'-0"	
Side, Interior (South)				
Pedestal (non-oceanfront)	0'-0"	4'-0"	4'-0"	
Rear (East)				
Pedestal (non-oceanfront)	5'-0"	4'-6"	4'-6"	

Heights

Maximum Building Height	Allowed	Existing	Proposed	Remarks
Haddon Hall	50'-0"	50'-0"	50'-0"	
Haddon Hall Pool Suites	50'-0"	37'-0"	41'-0"	
Campton Bldg	50'-0"	37-0"	37-0"	*See Sec. 142-306*

Maximum Number of Stories	Allowed	Existing	Proposed	Remarks
Haddon Hall	5	3	4*	**Fourth floor rooftop solarium*
Haddon Hall Pool Suites	5	2	3	
Campton Bldg	5	2	2	*See Sec. 142-306*

11

SCOPE OF WORK

THE SCOPE OF WORK INCLUDES, BUT IS NOT LIMITED TO, THE FOLLOWING ITEMS:

NOTE: THE SCOPE OF WORK HAS BEEN DIVIDED UP AND IDENTIFIED BY BUILDING. ALL PROPOSED RENOVATIONS ARE CONSIDERED ALTERATION EXISTING BUILDING LEVELS 1 & 2 PER CHAPTER 4 SECTIONS 403 & 404 OF THE FLORIDA BUILDING CODE FOR EXISTING HISTORIC BUILDINGS (BOTH CAMPTON AND HADDON HALL), WITH LEVEL 3 OCCURRING AT THE NEW POOL SUITES BUILDING. THE OVERALL FIRE CLASSIFICATION IS "RENOVATION" AS DEFINED BY NFPA, CHAPTER 43 AND SHALL COMPLY WITH PROVISIONS OF BOTH CHAPTERS 6 &7 OF THE 2010 EXITING FLORIDA BUILDING CODE.

SITE WORK

- NEW CIVIL WORK / UPGRADES THROUGHOUT AS NOTED, INCLUDING NEW STORMWATER STORAGE SYSTEMS, BACKFLOW PREVENTER, PIV, RELOCATED FDC, ETC
- NEW FINISHES FOR POOL DECK AND COPING
- NEW ADA LIFT AND NATURAL BOULDERS INTEGRATED AT POOL DECK
- NEW FINISHES AND REFURBISHMENT OF NORTH POOL WALL
- ADD NEW POOL SURFACE FINISH FOR ENTIRE POOL INTERIOR
- NEW GLASS RAILING SYSTEM AT POOL PODIUM
- NEW POOL SAFETY BARRIER FENCING AT EACH SIDE OF POOL DECK AS REQUIRED BY CODE
- NEW TENSILE/FRAMED CABANAS, AND TRELLIS STRUCTURE AT POOL DECK
- NEW PLUMBING AND ELECTRICAL SERVICE TO NORTH POOL PODIUM
- NEW SITE LIGHTING AND ARCHITECTURAL LIGHTING THROUGHOUT
- UPDATED ARCHITECTURAL LIGHTING AT EXISTING LOCATIONS
- LIMITED LANDSCAPING AT CAMPTON BUILDING WEST YARD AND NEW LANDSCAPING THROUGHOUT ELSEWHERE
- NEW SLOPED, RAMPED, AND LEVEL PLATFORM SURFACES AT INTERIOR COURTYARD AND THROUGHOUT (INCLUDING HANDRAILS WITH NEW HANDRAILS AT EXISTING INTERIOR AND EXTERIOR LOCATIONS WHERE REQUIRED)

BUILDING A – HADDON HALL (ALTERATION LEVEL 2)

- RENOVATE EXISTING SPACES AT THE BASEMENT LEVEL TO ACCOMMODATE BACK OF HOUSE SUPPORT SPACES FOR THE HOTEL AND RESTAURANT OPERATIONS (TRASH, STORAGE, HOUSEKEEPING, OFFICES AND BREAK ROOM).
- NEW BAR/COFFEE AREA
- REFINISH LOBBY ELEVATOR TO SERVICE HOTEL NEEDS, BOTH GUESTS AND SERVICE PERSONNEL/OPERATIONS.
- UPDATE REQUIRED LIFE SAFETY SYSTEMS AS NOTED FOR LEVEL 1 & 2 ALTERATIONS.
- RESTORE ALL ARCHITECTURAL HISTORICAL FEATURES SUCH AS THE TERRAZZO FLOORS AT ALL EXTERIOR TERRACES AND INDOOR COURTYARD LOCATIONS (LOBBY, MAIN HALLWAYS, BAR/COFFEE, LIBRARY AREA)
- RESTORE BAR/COFFEE COVE CEILING
- RECONSTRUCT A/C CLOSET LOWER/SEPARATED FROM COVE LINE
- RESTORE EXISTING / REPLICATE HISTORIC ENTRY DRIVE PILLAR/LANTERNS ON COLLINS AVENUE ENTRANCE
- RESTORE HISTORIC FOUNTAIN/STATUE
- RESTORE EXTERIOR BALUSTRADE
- RESTORE BUILDING EYEBROWS
- UPDATE AND REPLACE PLUMBING, MECHANICAL, ELECTRICAL AND BUILDING FINISHES
- NEW DROPPED CEILING SOFFITS AT EACH SIDE OF GUESTROOM CORRIDORS TO CONCEAL SPRINKLER LINES AND OTHER MEP/FP COMPONENTS
- GUESTROOM CONFIGURATIONS TO REMAIN AS EXISTING, ONLY INTERIOR REPLACEMENT OF EXITING FINISHES AND FIXTURES
- ALL BATHTUBS TO REMAIN BE REFINISHED/REFURBISHED
- ALL GUESTROOM DOORS AND HARDWARE TO BE REPLACED
- ALL GUESTROOM DOOR FRAMES TO REMAIN UNLESS DAMAGED
- REINFORCED BUILDING CORNERS AT WEST HADDON HALL FAÇADE
- REPLACE ALL EXTERIOR DOORS, WINDOWS, FRAMES, AND HARDWARE WITH NEW IMPACT RESISTANT/CODE COMPLIANT DOORS, WINDOWS, FRAMES, AND HARDWARE; EMULATE ORIGINAL HISTORIC ARCHITECTURAL DESIGN AND MUNTIN/MULLION CONFIGURATION
- NEW PAINT AT ALL EXTERIOR BUILDING SURFACES / INTERIOR WALL/CEILING FINISHES
- NEW ROOFING AT HADDON HALL (INCLUDING RE-ROOFING AT LOWER ROOFS AT WEST SIDE OF HADDON HALL)
- ALL ROOF LEVELS ARE EXISTING TO REMAIN (SOLARIUMS, ELEVATOR SHAFT, MECHANICAL ROOM AND STORAGE SPACES)
- ALL HISTORIC BUILDING FACADE EYEBROWS TO RECEIVE NEW WATERPROOFING SYSTEM
- ALL WINDOW A/C BOX UNITS TO BE REMOVED AT ALL BUILDINGS
- BLOCK UP WALLS AT EACH LOCATION AND RESTORE ALL FINISHES IN AREAS OF DEMOLITION
- NEW EXTERIOR RETRACTABLE AWNING SYSTEMS AT COURTYARD
- NEW BUILDING FACADE UPLIGHTING ALONG EAST AND WEST FACADES
- NEW SPECIALTY LIGHTING AT DROP-OFF AND FOOTPATH LIGHTING
- RESTORE EXISTING HISTORIC BUILDING SIGNAGE OVER MAIN ENTRANCE
- REPLICATE HISTORIC SIGNAGE AND INSTALL AT EAST FACADE ON EXISTING ELEVATOR HOISTWAY
- RESTORE COLLINS AVENUE SIDE HISTORIC POLE SIGNS TO ORIGINAL HISTORIC CONTENT AND CONDITION
- ADD NEW EXTERIOR HOTEL SIGNAGE/PLAQUARD TO BE LOCATED NEAR HADDON HALL MAIN ENTRANCE (WITH HOTELIER / BRANDING INFORMATION)

BUILDING B – CAMPTON BUILDING (ALTERATION LEVEL 2)

- RENOVATE EXISTING SPACES AT THE BASEMENT LEVEL TO ACCOMMODATE BACK OF HOUSE SUPPORT SPACES FOR THE HOTEL AND RESTAURANT OPERATIONS (STORAGE AND TOILET ROOM)
- NEW GROUND LEVEL KITCHEN
- NEW INDOOR/OUTDOOR RESTAURANT AT GROUND LEVEL
- UPDATE REQUIRED LIFE SAFETY SYSTEMS AS NOTED FOR LEVEL 1 & 2 ALTERATIONS
- PROVIDE NEW FIRE SPRINKLER SYSTEM AT CAMPTON BUILDING
- RESTORE ALL ARCHITECTURAL HISTORICAL FEATURES SUCH AS THE TERRAZZO FLOORS AT ALL EXTERIOR TERRACES AND INDOOR LOCATIONS (MULTI FUNCTION ROOM)
- RESTORE BUILDING EYEBROWS
- RESTORE HISTORIC FIREPLACE AND FLUTED LIGHT FIXURES AT MULTI-FUNCTION ROOM
- HISTORIC DOORS AT MULTI-FUNCTION ROOM TO REMAIN AND BE RESTORED WITH NEW FINISH
- UPDATE AND REPLACE PLUMBING, MECHANICAL, ELECTRICAL AND BUILDING FINISHES
- NEW DROPPED CEILING SOFFITS AT SELECTED AREAS OF GUESTROOM CORRIDORS TO CONCEAL SPRINKLER LINES AND OTHER MEP/FP COMPONENTS
- SELECTED RECONFIGURATION OF GUESTROOM'S BATHROOMS OF SIXTEEN UNITS
- SELECTED DOORS TO BE REPLACED
- DOOR FRAMES TO REMAIN UNLESS DAMAGED
- NEW STRUCTURAL SLAB (LOWERED) TO ACCOMMODATE PUBLIC RESTROOMS AT GROUND FLOOR
- NEW STRUCTURAL SLAB (RAISED) TO ACCOMMODATE CORNER RESTAURANT AT GROUND FLOOR
- NEW STRUCTURAL SLAB AT NEW STAFF BREAKROOM IN BASEMENT
- REPLACE ALL EXTERIOR DOORS, WINDOWS, FRAMES, AND HARDWARE WITH NEW IMPACT RESISTANT/CODE COMPLIANT DOORS, WINDOWS, FRAMES, AND HARDWARE; EMULATE ORIGINAL HISTORIC ARCHITECTURAL DESIGN AND MUNTIN/MULLION CONFIGURATION
- NEW PAINT AT ALL EXTERIOR BUILDING SURFACES / INTERIOR WALL/CEILING FINISHES
- NEW ROOFING AT (INCLUDING RE-ROOFING AT LOWER ROOFS)
- ALL ROOF LEVELS ARE EXISTING TO REMAIN (SOLARIUMS, ELEVATOR SHAFT, MECHANICAL ROOM AND STORAGE SPACES)
- ALL HISTORIC BUILDING FACADE EYEBROWS TO RECEIVE NEW WATERPROOFING SYSTEM
- ALL WINDOW SECURITY BARS AT CAMPTON BUILDING TO BE REMOVED
- ALL WINDOW A/C BOX UNITS TO BE REMOVED AT ALL BUILDINGS
- BLOCK UP WALLS AT EACH LOCATION AND RESTORE ALL FINISHES IN AREAS OF DEMOLITION
- NEW EXTERIOR RETRACTABLE AWNING SYSTEMS AT COURTYARD
- NEW BUILDING FACADE UPLIGHTING ALONG EAST, WEST, AND NORTH FACADES
- RESTORE WASHINGTON AVENUE SIDE HISTORIC POLE SIGNS TO ORIGINAL HISTORIC CONTENT AND CONDITION

BUILDING C – POOL SUITES (ALTERATION LEVEL 3)

- DEMOLISH AND RECONSTRUCT THE POOL SUITES BUILDING IN ITS ENTIRETY TO THREE STORIES TO ACCOMMODATE ADDITIONAL GUESTROOMS WITH PRIVATE TERRACES
- NEW POOL SUITES BUILDING STRUCTURE WITH STAIRS, RAMP, AND ELEVATOR
- PROVIDE NEW FA/FP/LIFE SAFETY SYSTEMS FOR THE NEW POOL SUITES BUILDING
- NEW ARCHITECTURAL SLATTED SCREEN (EMULATING WOOD TONES) AT POOL SUITES BUILDING WITH INTEGRATED PROVISION FOR BACK LIGHTING AT NORTH, SOUTH, EAST, AND WEST FACADES
- NEW ARCHITECTURAL LIGHTING POOL SUITES ALONG NORTH, EAST, AND SOUTH FACADES INCLUDING ARCHITECTURAL SCREEN COMPONENT BACK-LIGHTING

11

LEGAL DESCRIPTION(S)

PROJECT IS THREE BUILDINGS LOCATED UPON 2 LOTS

PARCEL 1: HADDON HALL:

FOLIO #: 02-3234-019-1190

LOT AREA:

LOTS ONE (1) AND TWO (2) OF BLOCK SEVENTY-SIX (76) OF FISHER'S FIRST SUBDIVISION OF ALTON BEACH, ACCORDING TO THE PLAT THEREOF RECORDED IN PLAT BOOK 2, AT PAGE 77 OF THE PUBLIC RECORDS OF DADE COUNTY, FLORIDA, AND ALSO THE FOLLOWING DESCRIBED LAND: THAT PART OF VACATED FIFTEENTH STREET FORMERLY KNOWN AS AVENUE D, DESCRIBED AS FOLLOWS: BEGIN AT THE NORTHEAST CORNER OF LOT 1 OF BLOCK 76 OF FISHER'S FIRST SUBDIVISION OF ALTON BEACH, ACCORDING TO THE PLAT THEREOF RECORDED IN PLAT BOOK 2, PAGE 77, OF THE PUBLIC RECORDS OF DADE COUNTY, FLORIDA; THENCE NORTHEASTERLY ALONG WEST LINE OF COLLINS AVENUE A DISTANCE OF 70.98 FEET TO THE SOUTHEAST CORNER OF LOT 1, OF BLOCK 57 OF THE AFORESAID SUBDIVISION: THENCE WESTERLY ALONG THE SOUTHERLY LINE OF LOT 1, BLOCK 57 OF THE AFORESAID SUBDIVISION A DISTANCE OF 172.01 FEET, MORE OR LESS, TO A POINT WHERE THE WESTERLY LINE OF LOT 2 OF BLOCK 76 OF THE AFORESAID SUBDIVISION EXTENDED NORTHERLY INTERSECTS THE SOUTHERLY LINE OF LOT 1, OF BLOCK 57 OF THE AFORESAID SUBDIVISION; THENCE SOUTHERLY A DISTANCE OF 70 FEET TO THE NORTHWEST CORNER OF LOT 2 OF BLOCK 76 OF THE AFORESAID SUBDIVISION; THENCE EASTERLY ALONG THE NORTHERLY LINE OF LOT 2 AND 1 OF BLOCK 76 OF THE AFORESAID SUBDIVISION, A DISTANCE OF 155.21 FEET TO THE POINT OF BEGINNING.

PARCEL II: CAMPTON APARTMENTS:

FOLIO #: 02-3234-019-1200

LOT AREA: SF

COMMENCING AT THE NORTHWEST CORNER OF LOT 5, BLOCK 76 OF FISHER'S FIRST SUBDIVISION OF ALTON BEACH, AS SAME IS SHOWN UPON A RECORDED PLAT OF SAID SUBDIVISION, RECORDED IN PLAT BOOK 2, AT PAGE 77 OF THE PUBLIC RECORDS OF DADE COUNTY, FLORIDA: THENCE RUN EAST ALONG THE NORTH LINE OF SAID BLOCK 76, A DISTANCE OF ONE HUNDRED (100) FEET TO THE POINT OF BEGINNING OF THE TRACT OF LAND HEREIN DESCRIBED:

FROM SAID POINT OF BEGINNING RUN NORTH ALONG A LINE DEFLECTING 90 DEGREES TO THE LEFT, SAID LINE BEING PARALLEL TO AND ONE HUNDRED (100) FEET DISTANT EASTERLY FROM THE EASTERLY LINE OF WASHINGTON AVENUE, AS ABOVE RECORDED, A DISTANCE OF ONE HUNDRED FORTY-FIVE (145) FEET TO A POINT ON THE NORTH LINE OF THE SOUTH 1/2 OF LOT 19, BLOCK 57, FISHER'S FIRST SUBDIVISION OF ALTON BEACH, AS RECORDED IN PLAT BOOK 2, AT PAGE 77, PUBLIC RECORDS OF DADE COUNTY, FLORIDA; THENCE RUN EASTERLY ALONG A LINE DEFLECTING 90 DEGREES TO THE RIGHT ALONG THE NORTH LINE OF THE SOUTH 1/2 OF LOT 19, BLOCK 57, A DISTANCE OF SEVENTY-FIVE (75) FEET TO A POINT ON THE WEST LINE OF LOT 2, OF SAID BLOCK 57, THENCE RUN SOUTHERLY ALONG A LINE DEFLECTING 90 DEGREES TO THE RIGHT ALONG THE DIVIDING LINE BETWEEN LOTS 1 AND 2, AND LOT 20 AND THE SOUTH 1/2 OF LOT 19, BLOCK 57, A DISTANCE OF SEVENTY-FIVE (75) FEET TO A POINT, SAID POINT BEING THE SOUTHEASTERLY CORNER OF LOT 20, OR THE SOUTHWESTERLY CORNER OF LOT 1, OF SAID BLOCK 57; THENCE RUN SOUTHEASTERLY ALONG A LINE DEFLECTING TO THE LEFT 4°05'08.2", A DISTANCE OF 70.178 FEEL TO A POINT, SAID POINT BEING THE NORTHEASTERLY CORNER OF LOT 3, OF SAID BLOCK 76, FISHER'S FIRST SUBDIVISION: THENCE RUN WESTERLY ALONG A LINE DEFLECTING TO THE RIGHT 94°05'08.2' ALONG THE NORTHERLY LINE OF SAID BLOCK 76, A DISTANCE OF EIGHTY (80) FEET TO THE POINT OF BEGINNING OF THE TRACT OF LAND HEREIN DESCRIBED, CONTAINING 0.254 ACRES, MORE OR LESS.

PARCEL III: POOL SUITES:

FOLIO #: 02-3234-019-1191

LOT AREA: SF

LOT 3, 4 AND 5, IN BLOCK 76, OF FISHER'S FIRST SUBDIVISION OF ALTON BEACH, ACCORDING TO THE PLAT THEREOF, AS RECORDED IN PLAT BOOK 2, AT PAGE 77, OF THE PUBLIC RECORD OF DADE COUNTY, FLORIDA.

FAC NOTES

FLORIDA ACCESSIBILITY NOTES:

DUE TO THE HISTORIC NATURE OF HADDON HALL (BUILDING A) AND CAMPTON BUILDING (BUILDING B), THE PRE-EXISTING STRUCTURAL CONSTRAINTS AND HARDSHIP FOR THESE TWO BUILDINGS, AND BASED ON THE EXTENT OF THE SCOPE OF WORK, A WAIVER HAS BEEN SUBMITTED TO THE STATE FOR APPROVAL.

THE POOL SUITES (BUIDLING C), ON THE OTHER HAND IS A BRAND NEW BUILDING AND AND ALL REQUIREMENTS AND PROVISIONS TO COMPLY WITH THE FLORIDA ACCESSIBILITY CODE 2012 HAS BEEN MET.

REFER TO SHEET A001 FOR A DELINEATION OF THE ACCESSIBLE ROUTE THROUGHOUT THE PROPERTY.

12

ENGINEERING NOTES:

12a

POOL SUITES (BUILDING C) IS DESIGNED IN ACCORDANCE TO FBC 2010 SECTION 1612.4 AND ASCE 24-05 ALL OTHER STRUCTURES (HADDON HALL (BUILDING A) AND CAMPTON BUILDING (BUILDING B) ARE HISTORIC STRUCTURES TO REMAIN WITH MINOR REMODEL AS PART OF THE SCOPE OF WORK.

APPLICABLE BUILDING CODES: FLORIDA ACCESSIBILITY CODE, 2010 ED.

ZONING:	CODE OF THE CITY OF MIAMI BEACH
RESTORATION:	FLORIDA BUILDING CODE, EXISTING BUILDINGS, 2010 EDITION
NEW CONSTRUCTION:	FLORIDA BUILDING CODE, 2010 EDITION
PLUMBING:	FLORIDA BUILDING CODE, PLUMBING, 2010 EDITION
MECHANICAL:	FLORIDA BUILDING CODE, MECHANICAL, 2010 EDITION
ELECTRICAL:	NFPA 70–NATIONAL ELECTRICAL CODE
FIRE:	FLORIDA FIRE PREVENTION CODE, 2010 EDITION
	NFPA 1–UNIFORM FIRE CODE
	NFPA 101–LIFE SAFETY CODE
	NFPA 10–STANDARD FOR PORTABLE FIRE EXTINGUISHERS
	NFPA 13–STANDARD FOR THE INSTALLATION OF SPRINKLERS
	NFPA 14–STANDARD FOR THE INSTALLATION OF STANDPIPE, HYDRANT AND HOSE SYST.
	NFPA 72–NATIONAL FIRE ALARM CODE
	NFPA 80–FIRE DOORS AND OPENING PROTECTIVES
	NFPA 90A–STANDARD FOR INSTALLATION OF AIR CONDITIONING/VENTILATION UNITS
	NFPA 96–STANDARD FOR VENTILATION CONTROL OF FIRE PROTECTION OF COMMERCIAL COOKING OPERATIONS

MINIMUM CONSTRUCTION TYPE (AS PER FBC, 2010)

- GROUP R1 (FBC 302 / 310) 12a
- CONSTRUCTION TYPE III-B NONCOMBUSTIBLE PROTECTED CONSTRUCTION (FBC. TABLE 601)
- MAXIMUM ALLOWED HEIGHT: 55 FT.; 4 STORIES ABOVE GRADE (FBC TABLE 503)
- MAXIMUM ALLOWED AREA PER FLOOR: 16,000 SF (FBC TABLE 503)
- MINIMUM FIRE RESISTANT RATING BASED ON FIRE SEPARATION DISTANCE: 0 HOURS (FBC TABLE 602)

ACCESSIBLE ROOMS (AS PER FBC, 2010)

PER FBC SECTION 806 –	REQUIRED	PROVIDED
ACCESSIBLE ROOMS:	9	9
HEARING IMPAIRED ROOMS:	13*	13

NOTES:

REFER TO ROOM MATRIX FOR ADA & COMMUNICATIONS / HEARING IMPAIRED ROOM IDENTIFICATION.

FOOD & BEVERAGE SEATING CAPACITY

FOR FOOD & BEVERAGE SEATING CAPACITY REFER TO A008

FOR OCCUPANCY LOAD CALCULATIONS REFER TO SHEET LS-101A

10 11

MIN. INTERIOR WALL AND FINISH REQUIREMENTS

MINIMUM INTERIOR WALL AND CEILING FINISH REQUIREMENTS FOR R-1 AS PER TABLE 803.9 (FBC 2010)

AT EXIT ENCLOSURES AND PASSAGE WAYS:	CLASS B
AT CORRIDORS:	CLASS C
AT ROOMS AND ENCLOSED SPACES:	CLASS C

APPROVED MIAMI BEACH ...E DEPARTMENT

12

HADDON HALL
1500 COLLINS AVE

MIAMI BEACH, FL

KEYPLAN N.T.S.

REVISIONS

NO.	DESCRIPTION	ISSUE DATE
4	FIRE REVIEW COMMENTS	04-01-2014
10	MASTER PERMIT COMMENTS	07-03-2014
11	P&Z COMMENTS	07-14-2014
12	FIRE & MTCI PERMIT COMMENTS	08-21-2014
12a	FIRE & MTCI PERMIT COMMENTS	09-29-2014

MTCI
PRIVATE PROVIDER SERVICES, LLC
Construction Plans Review, Inspections, Testing & Consulting

	REVIEWER INITIALS	DATE REVIEWED
BUILDING	EM	11-10-14
STRUCTURAL		
MECHANICAL		
ELECTRICAL		
PLUMBING		
SITE CIVIL		

100% CONSTRUCTION DOCUMENT SET

SEAL

10.9.14
Jonathan Cardello
Lic. # AR93391

ADD Inc Architecture Interiors Planning

One Biscayne Tower
Suite 1670
Two South
Biscayne Boulevard
Miami, Fl 33131
T. 305.482.8700
F. 305.482.8770
www.addinc.com
Lic. # AA26001507

Boston Miami

JOB NUMBER:	13036.00
CHECKED BY:	
ISSUE DATE:	FEBRUARY 18, 2014
SCALE:	NTS.

SHEET TITLE

DESIGN DATA, CODE INFO

SHEET NUMBER

G011

COPYRIGHT ADD INC 2011

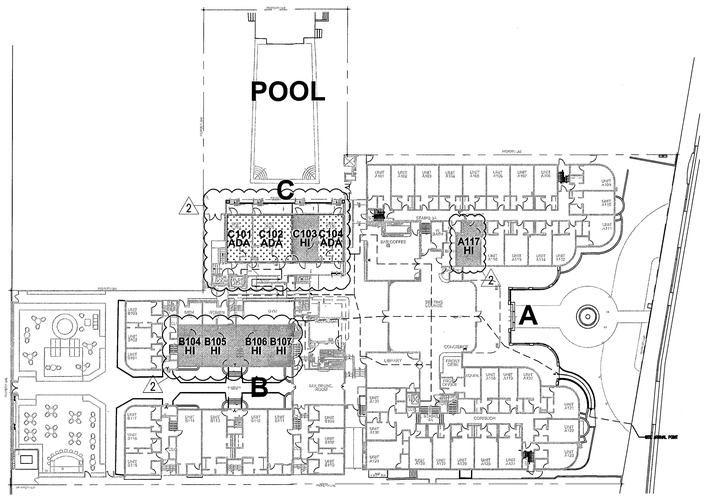

1 FIRST FLOOR MOBILITY & COMMUNICATIONS FEATURES PLAN
SCALE: 1/32" = 1'-0"

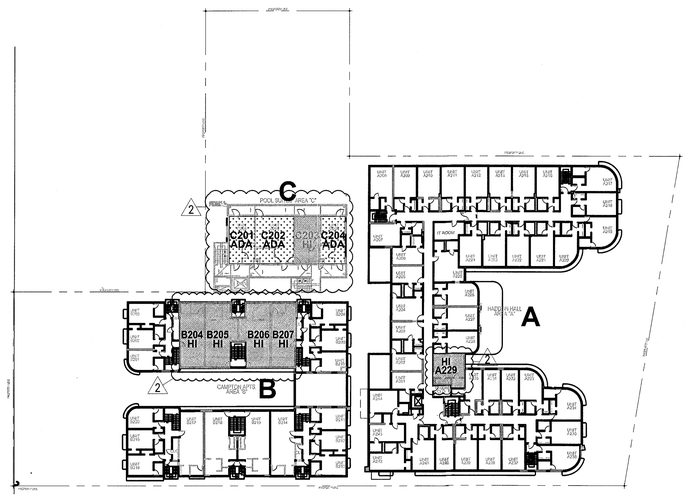

2 SECOND FLOOR MOBILITY & COMMUNICATIONS FEATURES PLAN
SCALE: 1/32" = 1'-0"

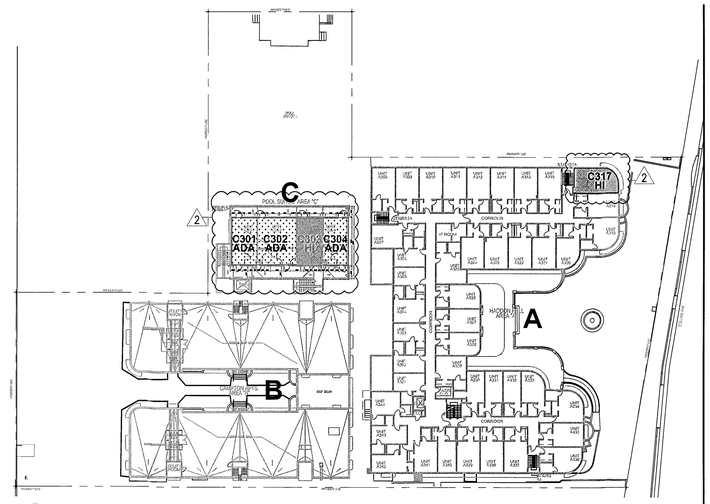

3 THIRD FLOOR MOBILITY & COMMUNICATIONS FEATURES PLAN
SCALE: 1/32" = 1'-0"

HADDON HALL
1500 COLLINS AVE
MIAMI BEACH, FL

KEYPLAN N.T.S.

REVISIONS

NO.	DESCRIPTION	ISSUE DATE
1	PROGRESS TO 100% CD	02-18-2014
2	PERMIT REVIEW COMMENTS	03-14-2014
4	PERMIT REVIEW COMMENTS	04-01-2014
5	GUESTROOM COORDINATION	04-17-2014
2a	FIRE PERMIT COMMENTS	09-29-2014

4

PLUMBING FIXTURE COUNT - FBC PLUMBING CODE 403.1

LEVEL	LOCATION	OCCUPANT LOAD	CLASSIFICATION / OCCUPANCY	REQUIRED WATER CLOSETS MALE	REQUIRED WATER CLOSETS URIN.	REQUIRED WATER CLOSETS FEMALE	PROVIDED WATER CLOSETS MALE	PROVIDED WATER CLOSETS URIN.	PROVIDED WATER CLOSETS FEMALE	REQUIRED LAVATORIES MALE	REQUIRED LAVATORIES FEMALE	PROVIDED LAVATORIES MALE	PROVIDED LAVATORIES FEMALE	REQUIRED DRINKING FOUNTAIN	PROVIDED DRINKING FOUNTAIN	OTHER
GROUND FLOOR LEVEL	INDOOR/OUTDOOR RESTAURANT	95	A2 (RESTAURANT)													
	JUICE / COFFEE	59														
	TOTAL	154		2		3				1	1					
	SWIMMING POOL / DECK	190	M (SWIMMING POOL/DECK)	2		3				2	2					
	GRAND TOTAL	344 / 2 = 172		3	--	3	2	2	3	2	2	5	5	0*	3	
	UTILITY ROOM 012															1
	ROOM 401															1

NOTE:
*1. AS PER SECTION 410 OF THE FLORIDA 2010 PLUMBING CODE WATER WILL BE AVAILABLE AND PROVIDED AT PUBLIC AREAS INCLUDING RESTAURANTS AND BARS; THEREFORE DRINKING FOUNTAINS ARE NOT A REQUIREMENT.
2. A FLOOR SINK IS ALSO PROVIDED IN THE KITCHEN.

2

MTCI
PRIVATE PROVIDER SERVICES, LLC
Construction Plans Review, Inspections, Testing & Consulting

	REVIEWER INITIALS	DATE REVIEWED
BUILDING	EM	10-10-14
STRUCTURAL		
MECHANICAL		
ELECTRICAL		
PLUMBING		
SITE DEV.		

A.D.A. (GUEST ROOM UNIT WITH MOBILITY FEATURES TO COMPLY WITH FAC 2012, 806.2)

H.I. (GUEST ROOM UNIT WITH COMMUNICATIONS FEATURES TO COMPLY WITH FAC 2012, 806.3)

NOTE 1. AS PER FLORIDA ACCESSIBILITY CODE, 2010 TABLE 224.2 (GUEST ROOMS WITH MOBILITY FEATURES) 162 TOTAL UNITS @ 5%= 8.1 OR 9 UNITS REQUIRED.

NOTE 2. AS PER FLORIDA ACCESSIBILITY CODE, 2010 TABLE 224.2 (TOTAL NUMBER OF GUEST ROOMS PROVIDED 151-200) 14 UNITS REQUIRED

ADD & HI MATRIX

	ROOM #	ADA	HI	COMMENTS
H.H.	A117			
	A229			
	A317			
CAMPTON	B104			
	B105			
	B106			
	B107			
	B204			
	B205			
	B206			
	B207			
POOL SUITES	C101			
	C102			
	C103			
	C104			
	C201			
	C202			
	C203			
	C204			
	C301			
	C302			
	C303			
	C304			
	TOTAL	9	14	

5

A. FIRST FLOOR - HADDON HALL — GR MATRIX - HH

ROOM #	SQ. FT.	BED	TYPE
A101	294	DQ	A1c
A102	290	DQ	A1
A103	297	DQ	A1
A104	290	DQ	A1
A105	292	DQ	A1
A106	292	DQ	A1d
A107	292	DQ	A1d
A108	285	DQ	A1
A109	308	K	A2
A110	294	K	A1b
A111	315	K	A2
A112	283	K	A3
A114	270	K	A4
A115	312	K	A4
A116	266	K	A4
A117	295	K	A4
A118	245	Q/S	A5
A119	248	Q/S	A5
A120	281	K	A3
A121	294	K	A2
A122	293	K	A1b
A123	303	K	A2
A124	290	DQ	A1
A125	292	DQ	A1
A126	292	DQ	A1
A127	238	Q	A5a
A128	274	DQ	A1
A129	360	DQ	A6
A130	208	F	A7f
A131	265	K	A7a

A. SECOND FLOOR - HADDON HALL — GR MATRIX - HH

ROOM #	SQ. FT.	BED	TYPE
A201	219	Q	A8
A202	219	Q	A8
A203	215	F	A8f
A204	267	Q	A8b
A205	216	Q	A8
A206	227	Q	A8
A207	280	DQ	A11
A208	293	DQ	A1c
A209	290	DQ	A1
A210	288	DQ	A1
A211	295	DQ	A1
A212	292	DQ	A1
A214	289	DQ	A1d
A215	292	DQ	A1d
A216	284	DQ	A1
A217	309	K	A2
A218	291	K	A1b
A219	293	K	A2
A220	279	K	A3
A221	301	DQ	A4a
A222	290	DQ	A4a
A223	291	DQ	A4a
A224	287	DQ	A4a
A225	305	K	A10b
A226	293	K	A1b
A227	289	K	A1b
A228	281	K	A1b
A229	269	K/S	A10a
A230	256	K	A5b
A231	259	Q/S	A5
A232	245	Q/S	A5
A233	282	K	A3
A234	294	K	A2
A235	295	K	A1b
A236	293	K	A2
A237	287	DQ	A1
A238	292	DQ	A1
A239	292	DQ	A1
A240	255	Q	A5a
A241	261	DQ	A1a
A242	288	DQ	A9a
A243	245	Q/S	A8a
A244	271	DQ	A9

A. THIRD FLOOR - HADDON HALL — GR MATRIX - HH

ROOM #	SQ. FT.	BED	TYPE
A301	219	Q	A8
A302	219	Q	A8
A303	215	F	A8f
A304	267	Q	A8b
A305	216	Q	A8
A306	227	Q	A8
A307	280	DQ	A11
A308	293	DQ	A1c
A309	290	DQ	A1
A310	288	DQ	A1
A311	295	DQ	A1
A312	292	DQ	A1
A314	289	DQ	A1d
A315	292	DQ	A1d
A316	284	DQ	A1
A317	309	K	A2
A318	291	K	A1b
A319	293	K	A2
A320	279	K	A3
A321	301	DQ	A4a
A322	290	DQ	A4a
A323	291	DQ	A4a
A324	287	DQ	A4a
A325	305	K	A10b
A326	293	K	A1b
A327	289	K	A1b
A328	281	K	A1b
A329	269	K/S	A10a
A330	256	K	A5b
A331	259	Q/S	A5
A332	245	Q/S	A5
A333	282	K	A3
A334	294	K	A2
A335	295	K	A1b
A336	293	K	A2
A337	287	DQ	A1
A338	292	DQ	A1
A339	292	DQ	A1
A340	255	Q	A5a
A341	261	DQ	A1a
A342	288	DQ	A9a
A343	245	Q/S	A8a
A344	271	DQ	A9

B. FIRST FLOOR - CAMPTON — GR MATRIX - CAMPTON

ROOM #	SQ. FT.	BED	TYPE
B101	226	K	B4a
B102	222	K	B4b
B103	246	K	B4a
B104	280	Q	B1
B105	312	Q/S	B1a
B106	283	Q/S	B1a
B108	303	K	B4b
B109	304	K	B4b
B110	305	K	B4a
B111	451	DQ	B3b
B112	504	DQ	B3a
B113	504	DQ	B3a
B114	473	DQ	B3b
B115	264	K	B4a
B116	200	K	B4b
B117	225	K	B4a

B. SECOND FLOOR - CAMPTON — GR MATRIX - CAMPTON

ROOM #	SQ. FT.	BED	TYPE
B201	225	K	B4a
B202	222	K	B4b
B203	246	K	B4a
B204	469	DQ	B2
B205	511	DQ	B3a
B206	494	DQ	B3a
B207	476	DQ	B2
B208	250	K	B4b
B209	222	K	B4b
B210	222	K	B4b
B211	246	K	B4b
B212	216	K	B4b
B213	237	K	B4a
B214	465	DQ	B2
B215	503	DQ	B3a
B216	506	DQ	B3a
B217	470	DQ	B2
B218	264	K	B4a
B219	200	K	B4b
B220	225	K	B4a

C. GR MATRIX - POOL SUITES

	ROOM #	SQ. FT.	BED	TYPE
FLOOR 1	C101	340	K	C1
	C102	510	K/DT	C2
	C103	340	DT	C3
	C104	340	K	C1
FLOOR 2	C201	340	K	C1
	C202	510	K/DT	C2
	C203	340	DT	C3
	C204	340	K	C1
FLOOR 3	C301	340	K	C1
	C302	510	K/DT	C2
	C303	340	DT	C3
	C304	340	K	C1

TOTALS

	TYPE	TOTAL #
HADDON HALL	F	3
	Q	13
	DQ	51
	Q/S	8
	K/S	2
	K	39
CAMPTON	Q/S	2
	DQ	12
	Q	1
	K	21
POOL SUITES	DT	3
	K/DT	3
	K	6

GRAND TOTALS

TYPE	TOTAL #
DOUBLE TWIN (DT)	4
FULL (F)	3
SINGLE QUEEN (Q)	14
QUEEN W/SLEEPER (Q/S)	10
DOUBLE QUEEN (DQ)	63
KING (K)	66
KING W/ SLEEPR (K/S)	2
KING W/DOUBLE TWIN (K/DT)	3
TOTAL:	164

APPROVED
MIAMI BEACH
BUILDING DEPARTMENT

100% CONSTRUCTION DOCUMENT SET

NORTH SEAL

10-9-14
Jonathan Cardello
Lic. # AR93391

ADD Inc Architecture Interiors Planning

One Biscayne Tower
Suite 1670
Two South
Biscayne Boulevard
Miami, Fl 33131
T. 305.482.8700
F. 305.482.8770
www.addinc.com
Lic. # AA26001507

Boston Miami

JOB NUMBER: 13036.00
CHECKED BY:
ISSUE DATE: FEBRUARY 18, 2014
SCALE: NTS.

SHEET TITLE

ADA SITE ACCESS

SHEET NUMBER

G011a

COPYRIGHT ADD INC 2011

	Code Section	Requirements	Provided
		ADD requirements are **Bold**	

	Code Section	Requirements	Provided

1. Project Description

A. Building Location:	Miami Beach, Florida
B. Building Height	49'-0" NGVD top of roof slab
C. Building Area	64,350 Gross Square Feet + 162 hotel units

D. Applicable Building Codes (at new building and select renovation)		
553.73, F.S.	Florida Building Code 2010 – Building	
553.73, F.S.	Florida Building Code 2010 – Test Protocols for High Velocity for Hurricane Zones	
553.73, F.S.	Florida Building Code 2010 – Plumbing	
553.73, F.S.	Florida Building Code 2010 – Mechanical	
553.73, F.S.	Florida Building Code 2010 – Fuel Gas	
553.73, F.S.	Florida Building Code 2010 – Chapter 11, Florida Accessibility Code for Building Construction	
553.73, F.S.	Florida Building Code 2010 – Chapter 13, Florida Energy Efficiency for Building Construction	
633.01, 633.0215, 633.025, F.S.	Florida Fire Prevention Code – 2010 Edition (2009 NFPA 101 Life Safety Code)	
Chapter 61C-5 F.A.C.	Florida Elevator Safety Code	

2. Code Requirements

A. Chapter 3 – Use and Occupancy Classifications

1. Use Group

	Code Section	Requirements	Provided
Primary Occupancy	Section 310	**Residential Group, R-1**	
Accessory Uses	Section 303 Section 311	**Assembly Group, A-2** **Storage Group, S-1** **Business Group, B**	

	Code Section	Requirements ADD requirements are **Bold**	Min. Req'd
Mixed Occupancies - Height and area.	Table 503, 503.1.3	***Type IIB Construction*** *permitted to be of unlimited tabular building heights and areas are not subject to the special requirements that allow unlimited area buildings in Section 507 or unlimited building height in Sections 503.11 & 504.3 or increased building heights and areas for other types of construction.*	

B. Chapter 4 - Special Detailed Requirements based on Use and Occupancy

1 Public Swimming Pools

	Code Section	Requirements	Min. Req'd
Pool Fixtures Required	Table 424.1.6.1	*Men's Restroom-* *1 Urinal / 1 WC / 1 Lavatory* *Women's Restroom-* *1 WC / 1 Lavatory*	**Provided**

2 Transient Public Lodging Establishments

	Code Section	Requirements	Min. Req'd
Automatic Sprinkler System	Section 431	*Any transient public lodging establishment, as defined in Chapter 509 Florida Statutes and used primarily for transient occupancy, which is of three stories or more, with interior corridors which do not have direct access from the guest area to exterior means of egress, shall be equipped with an automatic sprinkler system*	**Provided**

C. Chapter 5 – General Building Heights & Areas

1. Allowable Height and Building Areas

a **Height - Minimum Construction Type IIB** — OK

	Code Section	Requirements	Min. Req'd
Allowable per Table **Group R-1**	Table 503	*4 Stories*	
Provided		**3 Stories**	**OK**

b **Area - Minimum Construction Type IIB**

	Code Section	Requirements	Min. Req'd
Allowable per Table **Group R-1**	Table 503		
Provided		**16,000 SF PER FLOOR**	**OK**

c **Incidental Use Areas** — 508.2

	Code Section	Requirements	Min. Req'd
Boiler Rooms	Table 508.2.5	*1 hour or provide automatic fire-extinguishing system*	**Provided**
Laundry Rooms	Table 508.2.5	*1 hour or provide automatic fire-extinguishing system*	**Provided**
Waste & Linen Collection Rooms	Table 508.2.5	*1 hour or provide automatic fire-extinguishing system*	**Provided**
Rooms containing fire pumps in non-high rise buildings	Table 508.2.5	*2 hours; or 1 hour or provide automatic fire-extinguishing system throughout the building*	**Provided**

	Code Section	Requirements ADD requirements are **Bold**	Min. Req'd
c **Required Separation of Occupancies (Hours)**	Table 508.4		
Non-separated Uses	508.3.2		
Accessory Use Modification	508.3.1.3	*If accessory occupancy does not occupy more than 10% of the area of the story in which it is located, then no separation is required.*	

D. Chapter 6 – Types of Construction

1. Fire Resistance Rating Requirements for Building Elements (hours)

a **Rating (hours) – Minimum Construction Type IIB**

	Code Section	Requirements	Min. Req'd
Structural Frame	Table 601	*0 hours*	**Provided**
Nonbearing walls and partitions Exterior	Table 602	*x ≤ 5': 1 hour*	**Provided**
Nonbearing walls and partitions Interior	Table 601	*0 hours*	**Provided**
Floor Construction	Table 601	*0 hours*	**Provided**
Roof Construction	Table 601	*0 hours*	**Provided**

E. Chapter 7 – Fire Resistance Rated Construction

1. Fire Resistance Ratings

	Code Section	Requirements	Min. Req'd
Fire-Resistance Ratings	704.1	*The fire resistance ratings of structural members and assemblies shall comply with this section and the requirements for the type of construction as specified in Table 601.*	**Provided**
Maximum Area of Exterior Wall Openings	Table 705.8	*Greater than 5' to 10' fire separation distance, maximum opening area: Protected, 25%*	**N/A**
Shaft Enclosures	708.4	*2 hours where connecting four stories or more*	**N/A**
Fire Partitions	709.3	*Walls shall have a fire-resistance rating of 1 hour between dwelling units and 1 hour for corridors.*	**At New Building**

F. Chapter 8 – Interior Finishes

1. Interior Wall and Ceiling Finish Requirements by Occupancy

	Code Section	Requirements	Min. Req'd
Exit enclosures and exit passageways	Table 803.9 Sprinklered	**Group R-1:** *Class B* **Group A:** *Class B* **Group S:** *Class C* **Group B:** *Class B*	**Provided**

	Code Section	Requirements ADD requirements are **Bold**	Min. Req'd
Corridors	Table 803.5 Sprinklered	**Group R-1:** *Class C* **Group A:** *Class B* **Group S:** *Class C* **Group B:** *Class C*	**Provided**
Rooms and enclosed spaces	Table 803.5 Sprinklered	**Group R-1:** *Class C* **Group A:** *Class C* **Group S:** *Class C* **Group B:** *Class C*	**Provided**

2. Interior Floor Finish

	Code Section	Requirements	Min. Req'd
Classification	Section 804 NFPA 253	*Class I or Class II*	**Provided**

3. Decorations and Trim

	Code Section	Requirements	Min. Req'd
Noncombustible materials	806.1.1	*No limit*	**Provided**
Combustible materials	806.1.2	*10% of aggregate area of walls and ceilings*	**Provided**
Trim	806.5	*Shall have a minimum class C flame index. Combustible trim, excluding handrails and guardrails, shall not exceed 10% of aggregate area of walls and ceilings.*	**Provided**

G. Chapter 9 – Fire Protection Systems

1. Automatic Sprinkler Systems

	Code Section	Requirements	Min. Req'd
Where required	903.2	*Approved automatic sprinkler systems in new buildings and structures shall be provided in locations described in Sections 903.2.1 through 903.2.12*	**Provided throughout**

2. Standpipe Systems

	Code Section	Requirements	Min. Req'd
General	905.1	*Required – highest floor is more than three stories above grade*	**Provided**

3. Fire Alarm and Detection Systems

	Code Section	Requirements	Min. Req'd
Group R-1	907.2.8.2	*An automatic smoke detection system that activates the occupant notification system in accordance with Section 907.5 shall be installed throughout all interior corridors serving sleeping units.*	**Provided throughout**
Group A-2	907.2.1	*Manual fire alarm boxes are not required where the building is equipped throughout with an automatic sprinkler system installed in accordance with Section 903.3.1.1*	**Provided**

	Code Section	Requirements ADD requirements are **Bold**	Min. Req'd
Group B	907.2.2	*Manual fire alarm boxes are not required where the building is equipped throughout with an automatic sprinkler system installed in accordance with Section 903.3.1.1*	**Provided**

H. Chapter 10 – Means of Egress

1. Occupant Load

	Code Section	Requirements	Min. Req'd
Residential	Table 1004.1.1	*200 gross SF*	
Assembly (un-concentrated tables and chairs)	Table 1004.1.1	*15 net SF*	
Exercise rooms with equipment	Table 1004.1.1	*50 gross SF*	
Kitchens	Table 1004.1.1	*200 gross SF*	
Storage	Table 1004.1.1	*300 gross SF*	
Business	Table 1004.1.1	*100 gross SF*	
Swimming pool deck	Table 1004.1.1	*30 gross SF*	

2. Egress Width

	Code Section	Requirements	Min. Req'd
Stairways (Inches per Occupant) with sprinkler system	1005.1	*0.3 inches per occupant*	**Provided**
Other Egress Components (Inches per Occupant) with sprinkler system	1005.1	*0.2 inches per occupant*	**Provided**
Door Encroachment	1005.2	*No more than ½ of egress width during swing – 7" encroachment when fully open*	**Provided**

3. Stairways

	Code Section	Requirements	Min. Req'd
Stairway Width	1009.1	*44" minimum*	**Provided**
Headroom	1009.2	*6'-8" minimum*	**Provided**
Stair Tread and Risers	1009.4	*Tread = 11" min.* *Riser = 4" min. / 7" max.*	**Provided**
Stairway landings	1009.5	*There shall be a floor or landing at the bottom and top of each stairway. The width of landings shall not be less than the width of the stairways they serve.*	**Provided**
Vertical Rise	1009.7	*12'-0" maximum rise between floor levels or landings*	**Provided**

4. Ramps

	Code Section	Requirements	Min. Req'd
Slope	1010.2	*Maximum 1:12 slope or 8%*	**Provided**
Cross Slope	1010.3	*2% maximum*	**Provided**
Width	1010.5.1	*36" minimum*	**Provided**
Headroom	1010.5.2	*6'-8" minimum*	**Provided**
Change in Direction @ Landings	1010.6.4	*Landing shall be 60" x 60" minimum*	**Provided**

	Code Section	Requirements ADD requirements are **Bold**	Min. Req'd
5. Handrails			
Where required	1012.1	*Required at all stairways and at ramps that rise more than 6"*	**Provided**
Height	1012.2	*Handrail height, measured above stair tread nosings, shall be uniform, not less than 34" and not more than 38".*	**Provided**
Handrail Extensions	1012.6	*Handrails shall extend horizontally at least 12" beyond the top riser and continue to slope for the depth of one tread beyond the bottom riser.*	**Provided**
Clearance	1012.7	*Clear space between a handrail and a wall or other surface shall be a minimum of 1.5 inches.*	**Provided**
6. Guards			
Where required	1013.1	*Required at all stairways, ramps, mezzanines and landings 30" above the floor or grade*	**Provided**
Height	1013.2	*42" high measured vertically above the adjacent walking surfaces*	**Provided**
7. Exit Access			
Common Path of Egress Travel	1014.3	***Group R-1****: shall not exceed 50 feet provided building is protected throughout with automatic sprinkler system. Travel within guestroom or dwelling unit shall not be included when calculating the common path of travel.* ***Group B****: 100 feet with sprinkler system* ***Group A****: 20 feet when occupant load is > 50.*	**Provided**
8. Exit and Access Doorway			
Exit and Access Doorways required	1015.1	***Group R-1- B*** *– one exit with a maximum occupant load of 10 occupants. Otherwise, 2 or more exits.* ***Groups A and B*** *– one exit with a maximum occupant load of 49 occupants. Otherwise, 2 or more exits.*	**Provided**

	Code Section	Requirements ADD requirements are **Bold**	Min. Req'd
Two exits or exit access doorways	1015.2.1	*Where two exits or exit access doorways are required from any portion of the exit access, the exit doors or exit access doorways shall be placed a distance apart equal to not less than 1/2 the length of the maximum overall diagonal dimension of the area to be served.* ***(Modified - See below)***	
Sprinkler Modification		*Where a building is equipped throughout with an automatic sprinkler system, the separation distance between exit doors shall not be less than 1/3 the length of the maximum overall diagonal dimension of the area to be served.*	**Provided**
9. Exit Access Travel Distance			
Travel Distance Limitations	T1016.1	***Group R-1*** *– 200 Feet with automatic sprinklers* ***Group A*** *– 250 Feet with automatic sprinklers* ***Group B*** *– 300 Feet with automatic sprinklers*	**Provided**
10 Corridors			
Corridor Fire-Resistance Rating	T1018.1	***Group R-1*** *– 1 hour with automatic sprinkler system.* ***Group A*** *– 1 hour with automatic sprinkler system.* ***Group B*** *– 1 hour with automatic sprinkler system.* **Rating is not required within dwelling units*	**Modified - No Rating, Only Smoke Barrier**
Corridor Width	1018.2	*44" Minimum*	
Dead Ends	1018.4	***Groups R-1, B, S*** *– 50 Feet; provided building is equipped throughout with an automatic sprinkler system.*	
11 Vertical Exit Enclosure			
Enclosure Required	1022.1	*Interior exit stairways shall be enclosed with fire barriers of not less than 2 hours where connecting 4 levels or more.*	**N/A**
12 Exit Passageways			
Exit Passageways	1023.1	*An exit passageway shall not be used for any purpose other than as a means of egress.*	**Provided**
Width	1023.2	*44" minimum*	**Provided**

	Code Section	Requirements ADD requirements are **Bold**	Min. Req'd
Construction	1023.3	*Exit passageway enclosures shall have walls, floors and ceilings of not less than 1 hour fire-resistance rating, and not less than that required for any connecting exit enclosure. Exit passageways shall be constructed as fire barriers in accordance with Section 707.*	**Provided**
13 Exit Discharge			
General	1027.1	*Exits shall discharge directly to the exterior of the building. The exit discharge shall be at grade or shall provide direct access to grade. The exit discharge shall not reenter the building.* ***(Modified - See Below)***	
Sprinkler Modification		*50% of the number of exit enclosures are permitted to egress through areas on the level of discharge with an automatic sprinkler, as long as the area is separated by construction conforming to the fire-resistance rating for the exit enclosure.*	Provided

I. Chapter 12 – Interior Environment

1. Interior Space Dimensions

	Code Section	Requirements	Min. Req'd
Natural Ventilation	1203.4.1 1203.4.2.1	*Minimum openable area of 4% of the floor area* *Bathrooms shall be mechanically ventilated*	**Provided**
Natural Light	1205.2	*Minimum 8 % of the floor area served*	**Provided**
Artificial Light	1205.3	*10 foot-candles over the area of a room at the height of 30 inches above the floor level.*	**Provided**
Sound Transmission			
Air-borne Sound	1207.2	*Walls, partitions, and floor/ceiling assemblies separating dwelling units shall have a minimum STC 50 per ASTM E 90.*	**Provided**
Structure-borne sound	1207.3	*Floor/ceiling assemblies shall have a minimum IIC 50 per ASTM E 492*	**Provided**
Minimum Ceiling Heights	1208.2	*Occup. Space = 7'-6" min. Kitchens, Bathrooms, Storage Rooms, and Laundry Rooms = 7'-0" min.*	**Provided**

	Code Section	Requirements ADD requirements are **Bold**	Min. Req'd
Furred Ceilings	1208.2.1	*7'-0" for 2/3 of room – maximum*	**Provided**
Surrounding Materials	1210.1	*In other than dwelling units, toilet and bathing room floors shall have a smooth, hard, nonabsorbent surface that extends upward onto the walls at least 4 inches.*	**Provided**
	1210.2	*Walls within 2 feet of urinals and water closets shall have a smooth, hard, nonabsorbent surface, to a height of 4 feet above the floor, and except for structural elements, the materials used in such walls shall be of a type that is not adversely affected by moisture.* *Exceptions:* *1. Dwelling units and sleeping units.* *2. Toilet rooms that are not accessible to the public and which have not more than one water closet.*	**Provided**

I. Chapter 14 – Exterior Walls

1. Performance Requirements

	Code Section	Requirements	Min. Req'd
Weather Protection	1405.2	*Exterior wall shall provide the building with a weather resistant exterior wall envelope*	**Provided**
Structure	1403.3	*Structural per chapter 16*	**Provided**
Fire Resistance	1403.4	*Per chapter 7*	**Provided**
Flood resistance	1403.6	*Look to local flood plan management*	**Provided**

2. Material

	Code Section	Requirements	Min. Req'd
Material Thicknesses	Table 1405.2	*Stucco (3 coat work over unit masonry): 0.625*	
Fire resistance	1406.2.2	*No combustible materials are allowed for the exterior of the building*	**Provided**

J. Chapter 30 - Elevators

	Code Section	Requirements	Min. Req'd
1. Hoistway Enclosure	Chapter 6	*2 hour rated*	**Provided**
2. Max Elevators within Hoistway	3002.2	*No more than 4 in a single enclosure.*	**Provided**
3. Roof Penetration			
Vent	3004.1	*Required for hoistways penetrating more than three stories*	**Provided**
Vent Area	3004.3	*Not less than 3 ½% nor less than 0.5 SF for each car in hoistway*	**Provided**
4. Machine Room Adjacency			
Access	3006.1	*Approved means of access to machine rooms*	**Provided**

	Code Section	Requirements ADD requirements are **Bold**	Min. Req'd
Venting	3006.2	*Independent Ventilation or air-conditioning system required*	**Provided**
5. Doors			

L. Accessibility

	Code Section	Requirements	Min. Req'd
1. Ramps and Landings	11-4.8.2	*The maximum slope of a ramp in new construction shall be 1 to 12.*	**Provided**
	11-4.8.3, Ex.	*Ramps that are a part of a required means of egress shall be not less than 44" wide.*	**Provided**
	11-4.8.4 (1)-(3)	*The landing shall be at least as wide as the ramp run leading to it. All landings on ramps shall be not less than 60" clear, and the bottom of each ramp shall have not less than 72" of straight and level clearance.*	**Provided**
2. Handrails	11-4.8.5	*Handrails on ramps which are not continuous shall extend at least 18" beyond the sloped segment at both the top and bottom, and shall be parallel to the ground surface.*	**Provided**
3. Alarms	11-4.28.1	*At a minimum, visual signal appliances shall be provided in buildings and facilities...in restrooms and any other general usage areas, hallways, lobbies, and other area for common use.*	**Provided**
	11-4.28.2	*If provided, audible emergency alarms shall produce a sound that exceeds the prevailing equivalent sound level in the room or space by at least 15 dbA or exceeds any maximum sound level with a duration of 60 seconds by 5 dbA, whichever is louder. Sound levels for alarm signals shall not exceed 120 dbA.*	**Provided**

	Code Section	Requirements ADD requirements are **Bold**	Min. Req'd
4. Detectable Warnings	11-4.30.1	*If a walk crosses or adjoins a vehicular way, and the walking surfaces are not separated by curbs, railings, or other elements between the pedestrian areas and vehicular areas, the boundary between areas shall be defined by a continuous detectable warning which is 36" wide, complying with Section 11-4.29.2.*	**Provided**
5. Signage	11-6.1 (3)	*Signage required to be accessible by Section 11.4.1 shall comply with the provisions of 11-4.30.*	**Provided**

M. Fair Housing Accessibility Guidelines

1 Design and Construction Requirements

	Code Section	Requirements	Min. Req'd
	100.205 (a)	*Covered multifamily dwellings for first occupancy after March 13, 1991 shall be designed and constructed to have at least one building entrance on an accessible route unless it is impractical to do so because of the site.*	**Provided**
	100.205 (c) (1)	*The public and common use areas are readily accessible to and usable by handicapped persons*	**Provided**
	100.205 (c) (2)	*All the doors designed to allow passage into and within all premises are sufficiently wide to allow passage by handicapped persons in wheelchairs. (32" W Min.)*	**Provided**
	100.205 (c) (3)	*All premises within covered multifamily dwelling units contain the following features of adaptable design:* *1. An accessible route into and through the covered dwelling unit (36" W Min)* *2. Light switches, electrical outlets, thermostats, and other environmental controls in accessible locations (15"-48" AFF)* *3. Reinforcements in bathroom walls to allow later installation of grab bars around the toilet, tub, shower, stall and shower seal* *4. Usable kitchen and bathrooms such that an individual in a wheelchair can maneuver about the space*	**Provided**

	Code Section	Requirements ADD requirements are **Bold**	Min. Req'd
Usable Kitchens	Requirement 7	*1. Provide a clear floor space of 30" x 48" that allows a parallel approach by a person in a wheelchair at the range or cooktop and sink, and either a parallel or forward approach at the oven, dishwasher, refrigerator/freezer or trash compactor.* *2. Clearance between counters and all opposing base cabinets, countertops, and appliances is at least 40".*	**Provided**
Usable Bathrooms	Requirement 7	*At least one bathroom in the dwelling unit must comply with the following; all other bathrooms and powder rooms must be on an accessible route with usable entry doors:* *1. Refer to figures FHAG-7(a-d) for fixture clear floor spaces. Clear floor space at fixtures may overlap. Doors may swing into the clear floor space provided at any fixture if the maneuvering space is provided.* *2. When both tub and shower facilities are provided, at least one must be accessible.* *3. Toilets must be installed so that the centerline of the fixture to any adjacent tub or wall is 1'-6" and the other side of the fixture is a minimum 1'-3" from the finished surface of adjoining vanities , walls or lavatory edges.* *4. Lavatories and vanities are installed with the center line of the fixture a minimum of 1'-3" horizontally from an adjoining wall or fixture. The top of the fixture rim is at 2'-10" AFF. Provide 27" H x 17" D clear knee space.*	**Provided**

L Plumbing Fixture Counts

	Code Section	Requirements	Min. Req'd
R-1	Table 403.1	*Water Closets:* *1 per sleeping unit* *Lavatories:* *1 per sleeping unit*	**Provided**
B	Table 403.1	*Water Closets: 1 per 25 for the first 50* *Lavatories: 1 per 40 for the first 80*	**Provided**

	Code Section	Requirements ADD requirements are **Bold**	Min. Req'd
A-2	Table 403.1 410.1	*Water Closets: 1 per 75* *Lavatories: 1 per 200* *Water Fountains: Where water is served in restaurants, drinking fountains shall not be required*	**Provided**

	Code Section	Requirements ADD requirements are **Bold**	Min. Req'd

Table 7.3.1.2 Occupant Load Factor

Use	(ft^2 per person)[a]	(m^2 per person)[a]
Assembly Use		
Concentrated use, without fixed seating	7 net	0.65 net
Less concentrated use, without fixed seating	15 net	1.4 net
Bench-type seating	1 person/18 linear in.	1 person/455 linear mm
Fixed seating	Number of fixed seats	Number of fixed seats
Waiting spaces	See 12.1.7.2 and 13.1.7.2.	See 12.1.7.2 and 13.1.7.2.
Kitchens	100	9.3
Library stack areas	100	9.3
Library reading rooms	50 net	4.6 net
Swimming pools	50 (water surface)	4.6 (water surface)
Swimming pool decks	30	2.8
Exercise rooms with equipment	50	4.6
Exercise rooms without equipment	15	1.4
Stages	15 net	1.4 net
Lighting and access catwalks, galleries, gridirons	100 net	9.3 net
Casinos and similar gaming areas	11	1
Skating rinks	50	4.6
Educational Use		
Classrooms	20 net	1.9 net
Shops, laboratories, vocational rooms	50 net	4.6 net
Day-Care Use	35 net	3.3 net
Health Care Use		
Inpatient treatment departments	240	22.3
Sleeping departments	120	11.1
Ambulatory health care	100	9.3
Detention and Correctional Use	120	11.1
Residential Use		
Hotels and dormitories	200	18.6
Apartment buildings	200	18.6
Board and care, large	200	18.6
Industrial Use		
General and high hazard industrial	100	9.3
Special-purpose industrial	NA	NA
Business Use (other than below)	100	9.3
Air traffic control tower observation levels	40	3.7
Storage Use		
In storage occupancies	NA	NA
In mercantile occupancies	300	27.9
In other than storage and mercantile occupancies	500	46.5
Mercantile Use		
Sales area on street floor[b,c]	30	2.8
Sales area on two or more street floors[c]	40	3.7
Sales area on floor below street floor[c]	30	2.8
Sales area on floors above street floor[c]	60	5.6
Floors or portions of floors used only for offices	See business use.	See business use.
Floors or portions of floors used only for storage, receiving, and shipping, and not open to general public	300	27.9
Mall buildings[d]	Per factors applicable to use of space[e]	

NA: Not applicable. The occupant load is the maximum probable number of occupants present at any time.

[a] All factors are expressed in gross area unless marked "net."

[b] For the purpose of determining occupant load in mercantile occupancies where, due to differences in the finished ground level of streets on different sides, two or more floors directly accessible from streets (not including alleys or similar back streets) exist, each such floor is permitted to be considered a street floor. The occupant load factor is one person for each 40 ft^2 (3.7 m^2) of gross floor area of sales space.

[c] For the purpose of determining occupant load in mercantile occupancies with no street floor, as defined in 3.3.253, but with access directly from the street by stairs or escalators, the floor at the point of entrance to the mercantile occupancy is considered the street floor.

[d] For any food court or other assembly use areas located in the mall that are not included as a portion of the gross leasable area of the mall building, the occupant load is calculated based on the occupant load factor for that use as specified in Table 7.3.1.2. The remaining mall area is not required to be assigned an occupant load.

[e] The portions of the mall that are considered a pedestrian way and not used as gross leasable area are not required to be assessed an occupant load based on Table 7.3.1.2. However, means of egress from a mall pedestrian way are required to be provided for an occupant load determined by dividing the gross leasable area of the mall building (not including anchor stores) by the appropriate lowest whole number occupant load factor from Figure 7.3.1.2(a) or Figure 7.3.1.2(b).

Each individual tenant space is required to have means of egress to the outside or to the mall based on occupant loads calculated by using the appropriate occupant load factor from Table 7.3.1.2.

Each individual anchor store is required to have means of egress independent of the mall.

MTCI
PRIVATE PROVIDER SERVICES, LLC
Construction Plans Review, Inspections, Testing & Consulting

	REVIEWER INITIALS	DATE REVIEWED
BUILDING	FM	1-10-14
STRUCTURAL		
MECHANICAL		
ELECTRICAL		
PLUMBING		
CIVIL		

APPROVED
MIAMI BEACH
FIRE DEPARTMENT

HADDON HALL
1500 COLLINS AVE
MIAMI BEACH, FL

KEYPLAN — N.T.S.

REVISIONS

NO.	DESCRIPTION	ISSUE DATE

PERMIT SET

SEAL

Jonathan Cardello
Lic. # AR93391

ADD Inc — Architecture Interiors Planning

One Biscayne Tower
Suite 1670
Two South
Biscayne Boulevard
Miami, Fl 33131
T. 305.482.8700
F. 305.482.8770
www.addinc.com
Lic. # AA26001507

Boston Miami

JOB NUMBER:	13036.00
CHECKED BY:	
ISSUE DATE:	JANUARY 24, 2014
SCALE:	NTS.

SHEET TITLE

CODE INFO

SHEET NUMBER

G-012

COPYRIGHT ADD INC 2011

FAR BREAKDOWN (BELOW GRADE)

	TYPE	AREA
	BACK OF HOUSE	3234 SF
	VERTICAL CIRCULATION	58 SF
	CORRIDOR	471 SF
	TOTAL	3763 SF

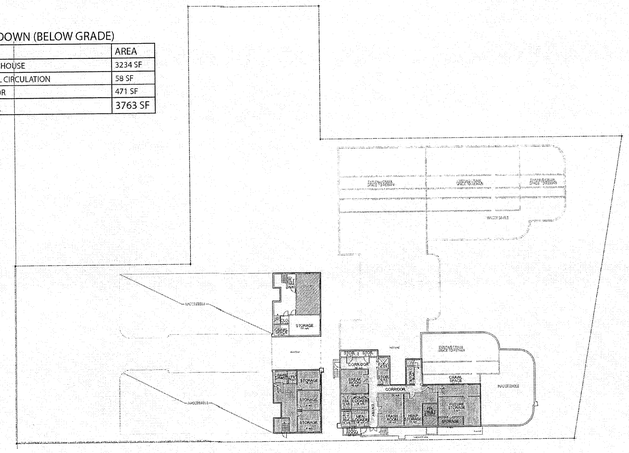

PROPOSED BASEMENT LEVEL

SCALE: NONE

FAR BREAKDOWN

	TYPE	AREA
	HOUSEKEEPING	223 SF
	FOOD AND BEVERAGE	1836 SF
	HOTEL PUBLIC SPACES	2955 SF
	BACK OF HOUSE	1002 SF
	VERTICAL CIRCULATION	654 SF
	CORRIDOR	2365 SF
	GUEST ROOMS	14,617 SF
	TOTAL	23,652 SF

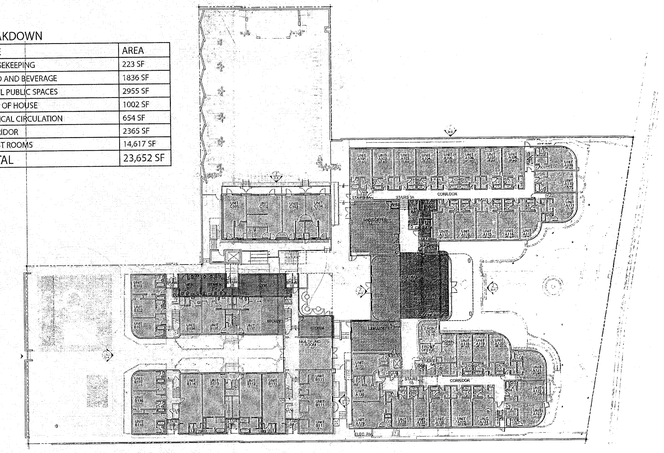

PROPOSED GROUND FLOOR LEVEL

SCALE: NONE

FAR BREAKDOWN

	TYPE	AREA
	HOUSEKEEPING / BACK OF HOUSE	407 SF
	VERTICAL CIRCULATION	672 SF
	CORRIDOR	1592 SF
	GUEST ROOMS	20354 SF
	TOTAL	23025 SF

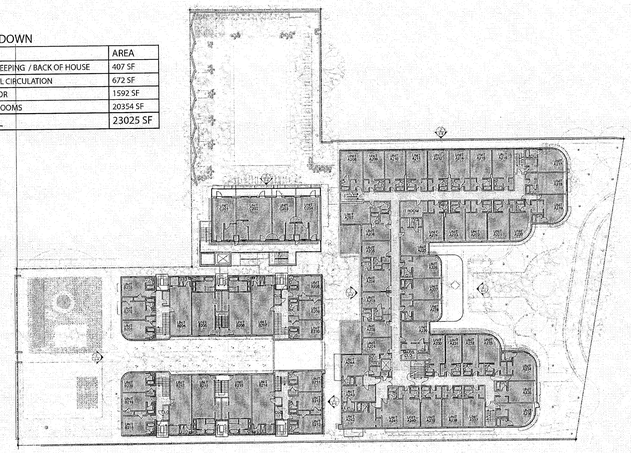

PROPOSED SECOND FLOOR LEVEL

SCALE: NONE

FAR BREAKDOWN

	TYPE	AREA
	HOUSEKEEPING	282 SF
	HOTEL	2955 SF
	VERTICAL CIRCULATION	424 SF
	CORRIDOR	1590 SF
	GUEST ROOMS	13,590 SF
	TOTAL	15888 SF

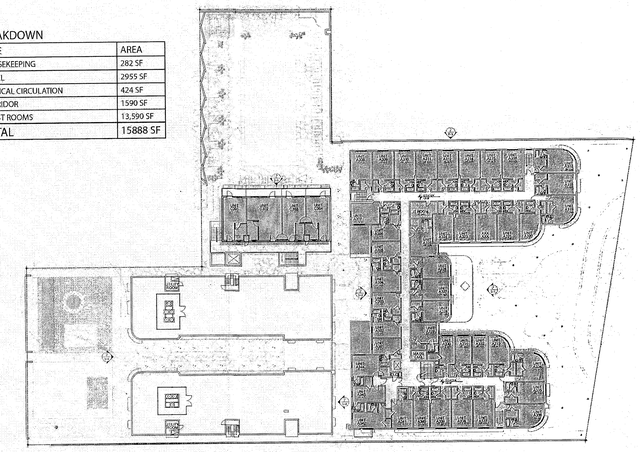

PROPOSED THIRD FLOOR LEVEL

SCALE: NONE

FAR BREAKDOWN

	TYPE	AREA
	SOLARIUM	280 SF
	VERTICAL CIRCULATION	------
	TOTAL	280 SF

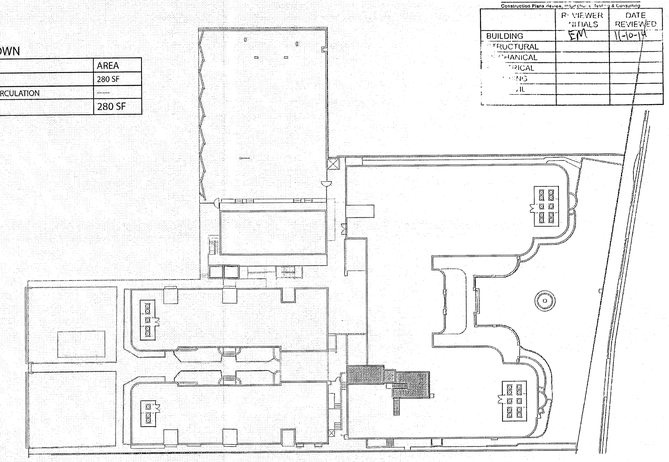

MITCI
PRIVATE PROVIDER SERVICES, LLC
Construction Plans Review, Inspection, Testing & Consulting

	REVIEWER INITIALS	DATE REVIEWED
BUILDING	EM	11-10-14
STRUCTURAL		
MECHANICAL		
ELECTRICAL		
PLUMBING		
FIRE		

APPROVED
MIAMI BEACH
FIRE DEPARTMENT

PROPOSED ROOF LEVEL

SCALE: NONE

HADDON HALL
1500 COLLINS AVE

MIAMI BEACH, FL

KEYPLAN N.T.S.

REVISIONS

NO.	DESCRIPTION	ISSUE DATE

100% CONSTRUCTION DOCUMENT SET

NORTH

SEAL

8-4-14

Jonathan Cardello
Lic. # AR93391

ADD Inc Architecture Interiors Planning

One Biscayne Tower
Suite 1670
Two South
Biscayne Boulevard
Miami, Fl 33131
T. 305.482.8700
F. 305.482.8770
www.addinc.com
Lic. # AA26001507

Boston Miami

JOB NUMBER: 13036.00

CHECKED BY:

ISSUE DATE: FEBRUARY 18, 2014

SCALE: NTS

SHEET TITLE

AREA PLANS

SHEET NUMBER

G-013

COPYRIGHT ADD INC 2011

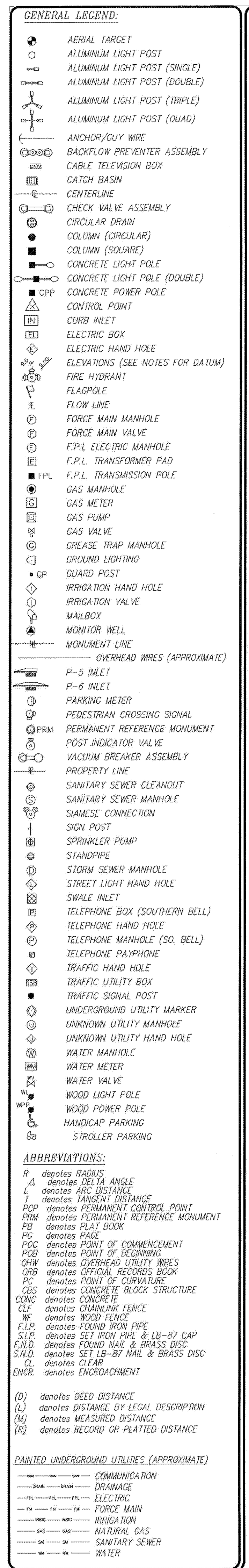

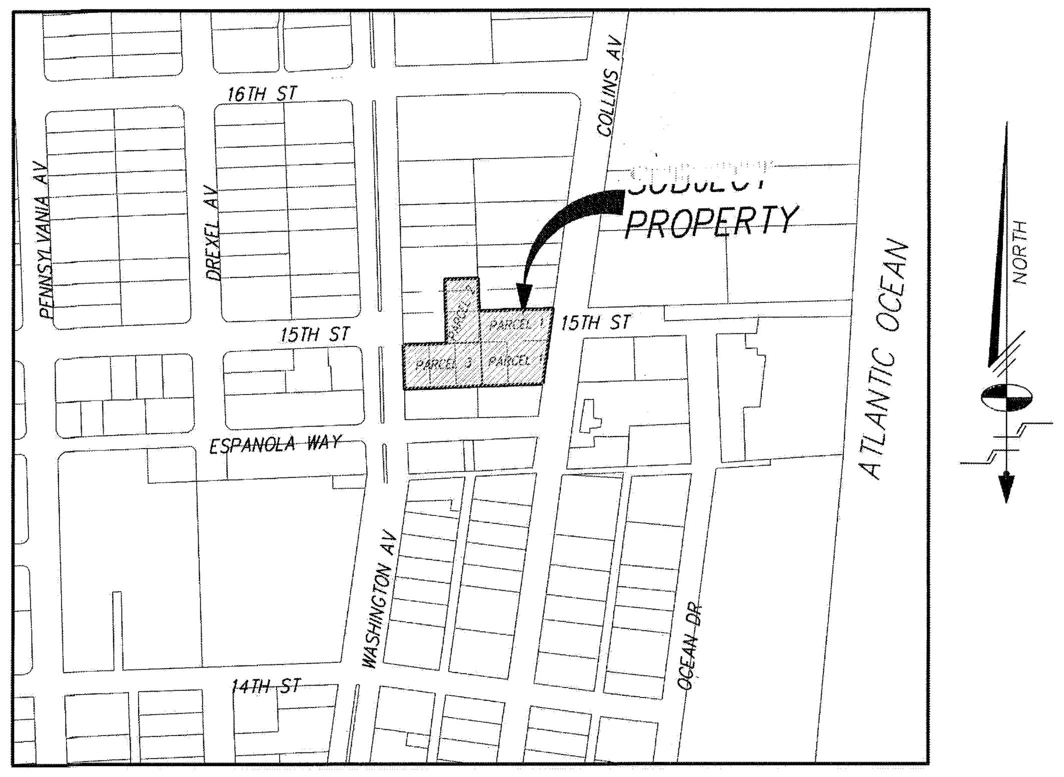

LOCATION MAP

SCALE = N.T.S.
A PORTION OF
SECTION 34, TOWNSHIP 53 SOUTH, RANGE 42 EAST

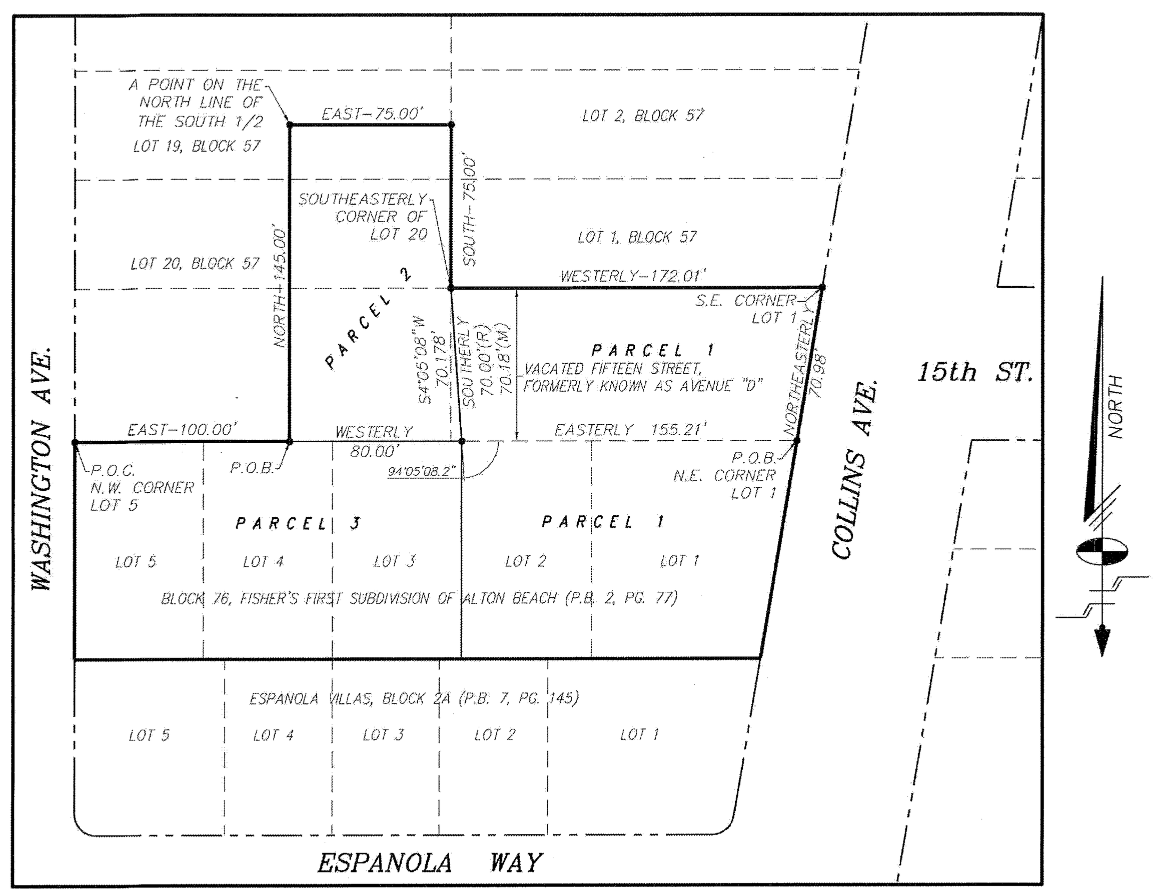

SKETCH OF PARCELS

SCALE: 1"=60'

TREE TABLE:

	COMMON		DIA.	HT.	CNPY. Ø	
TREE NO	NAME	SPECIES	IN.	FT.	FT.	
1	COCONUT PALM	"Cocos nucifera"	10	15	15	
2	COCONUT PALM	"Cocos nucifera"	10	15	15	
3	COCONUT PALM	"Cocos nucifera"	10	15	15	
4	COCONUT PALM	"Cocos nucifera"	8	15	15	
5	COCONUT PALM	"Cocos nucifera"	7	15	15	
6	COCONUT PALM	"Cocos nucifera"	8	15	15	
7	COCONUT PALM	"Cocos nucifera"	10	15	15	
8	COCONUT PALM	"Cocos nucifera"	7	15	15	
9	COCONUT PALM	"Cocos nucifera"	8	15	15	
10	COCONUT PALM	"Cocos nucifera"	8	15	15	
11	COCONUT PALM	"Cocos nucifera"	8	15	15	
12	COCONUT PALM	"Cocos nucifera"	8	15	15	
13	COCONUT PALM	"Cocos nucifera"	8	15	15	
14	COCONUT PALM	"Cocos nucifera"	8	15	15	
15	COCONUT PALM	"Cocos nucifera"	7	15	15	
16	COCONUT PALM	"Cocos nucifera"	7	15	15	
17	FICUS	"Ficus spp."	60	30	30	
18	ALEXANDER PALM	"Ptychosperma elegans"	5	20	10	
19	CABBAGE PALM	"Sabal palmetto"	12	10	8	
20	CABBAGE PALM	"Sabal palmetto"	14	15	10	
21	CABBAGE PALM	"Sabal palmetto"	12	12	10	
22	CABBAGE PALM	"Sabal palmetto"	10	6	10	
23	ALEXANDER PALM	"Ptychosperma elegans"	5	15	8	
24	ALEXANDER PALM	"Ptychosperma elegans"	5	15	8	
25	UNKNOW	UNKNOW	30	25	20	multy
26	ALMOND TREE	"Prunus dulcis"	14	25	30	
27	ALMOND TREE	"Prunus dulcis"	10	25	30	multy
28	CABBAGE PALM	"Sabal palmetto"	5	25	8	
29	ALEXANDER PALM	"Ptychosperma elegans"	6	25	10	
30	ALEXANDER PALM	"Ptychosperma elegans"	5	15	10	
31	ALEXANDER PALM	"Ptychosperma elegans"	5	15	8	
32	ALEXANDER PALM	"Ptychosperma elegans"	6	20	10	
33	AVOCADO	"Persea americana"	10	20	20	
34	AVOCADO	"Persea americana"	12	20	30	multy
35	ALEXANDER PALM	"Ptychosperma elegans"	6	15	8	
36	IRONWOOD	"Carpinus caroliniana"	9	15	15	multy
37	IRONWOOD	"Carpinus caroliniana"	8	10	12	multy
38	IRONWOOD	"Carpinus caroliniana"	10	12	12	multy
39	ALEXANDER PALM	"Ptychosperma elegans"	7	25	10	
40	ALEXANDER PALM	"Ptychosperma elegans"	6	20	10	

	COMMON		DIA.	HT.	CNPY. Ø	
TREE NO	NAME	SPECIES	IN.	FT.	FT.	
41	ALEXANDER PALM	"Ptychosperma elegans"	7	25	10	
42	BRAZILIAN PEPPER	"Schinus terebinthifolius"	3	20	10	
43	ALEXANDER PALM	"Ptychosperma elegans"	7	25	10	
44	ALEXANDER PALM	"Ptychosperma elegans"	6	20	10	
45	UNKNOW	UNKNOW	16	25	20	
46	ALEXANDER PALM	"Ptychosperma elegans"	7	25	15	
47	ALEXANDER PALM	"Ptychosperma elegans"	5	12	6	
48	ALEXANDER PALM	"Ptychosperma elegans"	7	25	15	
49	ALEXANDER PALM	"Ptychosperma elegans"	7	20	15	
50	ALEXANDER PALM	"Ptychosperma elegans"	4	15	6	
51	TRAVELER'S PALM	"Ravenala madagascariensis"	8	12	8	
52	TRAVELER'S PALM	"Ravenala madagascariensis"	7	10	8	
53	ALEXANDER PALM	"Ptychosperma elegans"	6	15	8	
54	ALEXANDER PALM	"Ptychosperma elegans"	5	15	8	
55	TRAVELER'S PALM	"Ravenala madagascariensis"	8	12	8	
56	ARECA PALM	"Chrysalidocarpus lutescens"	24	10	8	
57	ARECA PALM	"Chrysalidocarpus lutescens"	24	10	8	
58	ARECA PALM	"Chrysalidocarpus lutescens"	24	10	8	
59	ARECA PALM	"Chrysalidocarpus lutescens"	24	10	6	
60	ARECA PALM	"Chrysalidocarpus lutescens"	24	10	8	
61	TRAVELER'S PALM	"Ravenala madagascariensis"	10	12	8	
62	TRAVELER'S PALM	"Ravenala madagascariensis"	10	12	8	
63	ARECA PALM	"Chrysalidocarpus lutescens"	24	10	8	
64	ARECA PALM	"Chrysalidocarpus lutescens"	24	10	5	
65	UNKNOW	UNKNOW	48	20	20	
66	ARECA PALM	"Chrysalidocarpus lutescens"	24	10	8	
67	ARECA PALM	"Chrysalidocarpus lutescens"	24	12	8	
68	CABBAGE PALM	"Sabal palmetto"	12	8	6	
69	BRAZILIAN PEPPER	"Schinus terebinthifolius"	6	20	15	
70	ARECA PALM	"Chrysalidocarpus lutescens"	14	8	8	
71	ARECA PALM	"Chrysalidocarpus lutescens"	12	6	4	
72	CABBAGE PALM	"Sabal palmetto"	12	10	5	
73	FICUS	"Ficus spp."	36	30	30	
74	CABBAGE PALM	"Sabal palmetto"	12	6	4	
75	CABBAGE PALM	"Sabal palmetto"	12	10	8	
76	CABBAGE PALM	"Sabal palmetto"	12	12	8	
77	ALEXANDER PALM	"Ptychosperma elegans"	4	20	8	
78	ALEXANDER PALM	"Ptychosperma elegans"	5	15	8	
79	ALEXANDER PALM	"Ptychosperma elegans"	5	20	8	
80	ALEXANDER PALM	"Ptychosperma elegans"	6	20	8	
81	ALEXANDER PALM	"Ptychosperma elegans"	5	20	8	
82	CABBAGE PALM	"Sabal palmetto"	14	20	10	
83	CABBAGE PALM	"Sabal palmetto"	12	20	8	
84	ARECA PALM	"Chrysalidocarpus lutescens"	36	20	10	
85	ARECA PALM	"Chrysalidocarpus lutescens"	24	15	8	
86	FISHTAIL PALM	"Caryota mitis"	24	15	8	multy
87	TRAVELER'S PALM	"Ravenala madagascariensis"	12	15	8	
88	CABBAGE PALM	"Sabal palmetto"	12	10	5	
89	CABBAGE PALM	"Sabal palmetto"	12	15	8	
90	ALEXANDER PALM	"Ptychosperma elegans"	8	20	10	
91	ALEXANDER PALM	"Ptychosperma elegans"	7	20	10	
92	ALEXANDER PALM	"Ptychosperma elegans"	6	20	10	
93	ALEXANDER PALM	"Ptychosperma elegans"	7	20	10	
94	ALEXANDER PALM	"Ptychosperma elegans"	6	20	10	
95	ALEXANDER PALM	"Ptychosperma elegans"	7	20	10	
96	ALEXANDER PALM	"Ptychosperma elegans"	5	15	10	
97	ALEXANDER PALM	"Ptychosperma elegans"	8	20	10	
98	ALEXANDER PALM	"Ptychosperma elegans"	7	15	10	
99	ALEXANDER PALM	"Ptychosperma elegans"	4	15	8	
100	ALEXANDER PALM	"Ptychosperma elegans"	4	15	8	
101	ALEXANDER PALM	"Ptychosperma elegans"	5	15	6	
102	ALEXANDER PALM	"Ptychosperma elegans"	6	15	8	
103	CABBAGE PALM	"Sabal palmetto"	12	15	8	
104	CABBAGE PALM	"Sabal palmetto"	12	12	8	
105	CHRISTMAS PALM	"Veitchia merrillii"	11	12	8	multy
106	CHRISTMAS PALM	"Veitchia merrillii"	8	12	8	multy
107	CHRISTMAS PALM	"Veitchia merrillii"	6	20	8	multy
108	PAUROTIS PALM	"Acoelorrhaphe wrightii"	8	12	8	
109	CHRISTMAS PALM	"Veitchia merrillii"	6	20	8	multy
110	CHRISTMAS PALM	"Veitchia merrillii"	5	15	8	multy
111	PAUROTIS PALM	"Acoelorrhaphe wrightii"	9	8	6	
112	UNKNOW	UNKNOW	12	12	16	
113	PAUROTIS PALM	"Acoelorrhaphe wrightii"	7	6	4	
114	CHRISTMAS PALM	"Veitchia merrillii"	7	20	8	multy
115	CHRISTMAS PALM	"Veitchia merrillii"	6	15	8	multy
116	CABBAGE PALM	"Sabal palmetto"	12	10	8	
117	CHRISTMAS PALM	"Veitchia merrillii"	6	15	8	multy
118	CHRISTMAS PALM	"Veitchia merrillii"	12	15	8	multy
119	CHRISTMAS PALM	"Veitchia merrillii"	6	15	6	multy
120	CABBAGE PALM	"Sabal palmetto"	10	10	8	
121	CABBAGE PALM	"Sabal palmetto"	12	12	8	
122	CABBAGE PALM	"Sabal palmetto"	12	12	8	
123	CABBAGE PALM	"Sabal palmetto"	12	12	5	
124	CABBAGE PALM	"Sabal palmetto"	8	6	8	
125	CABBAGE PALM	"Sabal palmetto"	8	6	8	
126	CABBAGE PALM	"Sabal palmetto"	8	6	8	
127	CABBAGE PALM	"Sabal palmetto"	10	15	8	
128	CABBAGE PALM	"Sabal palmetto"	12	15	8	
129	CABBAGE PALM	"Sabal palmetto"	12	15	8	
130	CABBAGE PALM	"Sabal palmetto"	12	15	7	
131	CABBAGE PALM	"Sabal palmetto"	14	15	8	
132	CABBAGE PALM	"Sabal palmetto"	12	15	8	
133	CABBAGE PALM	"Sabal palmetto"	12	15	8	
134	CABBAGE PALM	"Sabal palmetto"	12	15	8	
135	CABBAGE PALM	"Sabal palmetto"	10	15	8	
136	QUEEN PALM	"Arecastrum romanzoffianum"	10	15	12	
137	CABBAGE PALM	"Sabal palmetto"	10	12	8	
138	CABBAGE PALM	"Sabal palmetto"	12	15	8	
139	CABBAGE PALM	"Sabal palmetto"	12	12	8	
140	CABBAGE PALM	"Sabal palmetto"	10	12	8	
141	CABBAGE PALM	"Sabal palmetto"	10	12	8	
142	CABBAGE PALM	"Sabal palmetto"	10	12	8	
143	CABBAGE PALM	"Sabal palmetto"	10	12	8	
144	CABBAGE PALM	"Sabal palmetto"	10	12	8	
145	CHRISTMAS PALM	"Veitchia merrillii"	7	15	8	
146	CHRISTMAS PALM	"Veitchia merrillii"	7	15	8	
147	CHRISTMAS PALM	"Veitchia merrillii"	7	15	8	
148	CHRISTMAS PALM	"Veitchia merrillii"	6	15	8	
149	CHRISTMAS PALM	"Veitchia merrillii"	7	15	8	
150	CHRISTMAS PALM	"Veitchia merrillii"	7	15	8	
151	CHRISTMAS PALM	"Veitchia merrillii"	7	15	8	
152	CHRISTMAS PALM	"Veitchia merrillii"	6	12	8	
153	CHRISTMAS PALM	"Veitchia merrillii"	7	15	8	
154	CHRISTMAS PALM	"Veitchia merrillii"	7	15	8	

SURVEYOR'S NOTES:

1) BEARINGS SHOWN HEREON REFER TO AN ASSUMED BEARING OF S09°34'00"W ALONG THE WEST RIGHT-OF-WAY LINE OF COLLINS AVENUE.
2) LEGAL DESCRIPTION SHOWN HEREON WAS PROVIDED BY CLIENT.
3) PROPERTY AS SHOWN HEREON CONTAINS 55,181± Sq.ft. (1.27 ACRES)
4) UNLESS OTHERWISE NOTED, THIS FIRM HAS NOT ATTEMPTED TO LOCATE FOOTINGS AND/OR FOUNDATIONS.
5) THIS SURVEY WAS PREPARED FOR THE EXCLUSIVE USE OF THE ENTITIES NAMED HEREON. THE ATTACHED CERTIFICATION DOES NOT EXTEND TO ANY UNNAMED PARTIES.
6) PROPERTY SHOWN HEREON FALLS WITHIN FEDERAL FLOOD ZONE "AE" (EL 8) PER FLOOD INSURANCE RATE MAP COMMUNITY PANEL No.120651 0317 L OF MAP DATED SEPTEMBER 11, 2009. WITH AND INDEX DATE OF SEPTEMBER 11, 2009 (MAP No. 12086C0317 L).
7) VISIBLE INDICATORS OF UTILITIES ARE SHOWN HEREON, HOWEVER, NO ATTEMPT HAS BEEN MADE TO LOCATE UNDERGROUND ITEMS.
8) DISTANCES ALONG BOUNDARY OF SUBJECT PROPERTY ARE RECORD AND MEASURED, UNLESS OTHERWISE STATED.
9) THIS "BOUNDARY SURVEY" IS SUBJECT TO EASEMENTS, RIGHTS-OF-WAY AND OTHER MATTERS THAT MIGHT BE REFLECTED ON A SEARCH OF TITLE OF THE SUBJECT LANDS.
10) ELEVATIONS SHOWN HEREON REFER TO NATIONAL GEODETIC VERTICAL DATUM OF 1929 (N.G.V.D.) AND ARE EXPRESSED IN FEET.
11) BENCHMARKS:
 a) MIAMI-DADE BENCHMARK D-148-R, ELEV. (NGVD 29) 6.35
 15 ST --- 105' SOUTH OF C/L-HWY A-1-A (COLLINS AVE) - 33' EAST OF C/L
 BM DESCRIPTION PK NAIL AND ALUMINUM WASHER IN CONC CATCH BASIN.
 b) MIAMI-DADE BENCHAMR D-149, ELEV. (NGVD 29) 4.18
 NE 15 ST --- 37' SOUTH OF C/L - MERIDIAN AVE --- 32' WEST OF C/L
 BM DESCRIPTION PK NAIL AND BRASS WASHER IN CONC GUTTER AT SW CORNER OF INTERSECTION
12) SUBJECT PROPERTY ARE MIAMI-DAE PROPERTY APPRAISER NUMBER:
 FOLIO No. 02-3234-019-1190 - 1500 COLLINS AVENUE (MAIN BUILDING).
 FOLIO No. 02-3234-019-1191 - 1500 COLLINS AVENUE (POOL BUILDING).
 FOLIO No. 02-3234-019-1200 - 1455 WASHINGTON AVENUE.
13) THERE ARE NO VISIBLE ENCROACHMENTS, OTHER THAN THOSE SHOWN HEREON.

LEGAL DESCRIPTION:

PARCEL 1

LOTS ONE (1) AND TWO (2) OF BLOCK SEVENTY-SIX (76) OF FISHER'S FIRST SUBDIVISION OF ALTON BEACH, ACCORDING TO THE PLAT THEREOF RECORDED IN PLAT BOOK 2, AT PAGE 77 OF THE PUBLIC RECORDS OF DADE COUNTY, FLORIDA, AND ALSO THE FOLLOWING DESCRIBED LAND: THAT PART OF VACATED FIFTEENTH STREET FORMERLY KNOWN AS AVENUE D, DESCRIBED AS FOLLOWS:
BEGIN AT THE NORTHEAST CORNER OF LOT I OF BLOCK 76 OF FISHER'S FIRST SUBDIVISION OF ALTON BEACH, ACCORDING TO THE PLAT THEREOF RECORDED IN PLAT BOOK 2, PAGE 77, OF THE PUBLIC RECORDS OF DADE COUNTY, FLORIDA; THENCE NORTHEASTERLY ALONG WEST LINE OF COLLINS AVENUE A DISTANCE OF 70.98 FEET TO THE SOUTHEAST CORNER OF LOT I, OF BLOCK 57 OF THE AFORESAID SUBDIVISION; THENCE WESTERLY ALONG THE SOUTHERLY LINE OF LOT I, BLOCK 57 OF THE AFORESAID SUBDIVISION A DISTANCE OF 172.01 FEET, MORE OR LESS, TO A POINT WHERE THE WESTERLY LINE OF LOT 2 OF BLOCK 76 OF THE AFORESAID SUBDIVISION EXTENDED NORTHERLY INTERSECTS THE SOUTHERLY LINE OF LOT I, OF BLOCK 57 OF THE AFORESAID SUBDIVISION; THENCE SOUTHERLY A DISTANCE OF 70 FEET TO THE NORTHWEST CORNER OF LOT 2 OF BLOCK 76 OF THE AFORESAID SUBDIVISION; THENCE EASTERLY ALONG THE NORTHERLY LINE OF LOT 2 AND I OF BLOCK 76 OF THE AFORESAID SUBDIVISION, A DISTANCE OF 155.21 FEET TO THE POINT OF BEGINNING.

PARCEL 2

COMMENCING AT THE NORTHWEST CORNER OF LOT 5, BLOCK 76 OF FISHER'S FIRST SUBDIVISION OF ALTON BEACH, AS SAME IS SHOWN UPON A RECORDED PLAT OF SAID SUBDIVISION, RECORDED IN PLAT BOOK 2, AT PAGE 77, OF THE PUBLIC RECORDS OF DADE COUNTY, FLORIDA: THENCE RUN EAST ALONG THE NORTH LINE OF SAID BLOCK 76, A DISTANCE OF ONE HUNDRED (100) FEET TO THE POINT OF BEGINNING OF THE TRACT OF LAND HEREIN DESCRIBED:

FROM SAID POINT OF BEGINNING RUN NORTH ALONG A LINE DEFLECTING 90 DEGREES TO THE LEFT, SAID LINE BEING PARALLEL TO AND ONE HUNDRED (100) FEET DISTANT EASTERLY FROM THE EASTERLY LINE OF WASHINGTON AVENUE, AS ABOVE RECORDED, A DISTANCE OF ONE HUNDRED FORTY-FIVE (145) FEET TO A POINT ON THE NORTH LINE OF THE SOUTH 1/2 OF LOT 19, BLOCK 57, FISHER'S FIRST SUBDIVISION OF ALTON BEACH, AS RECORDED IN PLAT BOOK 2, AT PAGE 77, PUBLIC RECORDS OF DADE COUNTY, FLORIDA; THENCE RUN EASTERLY ALONG A LINE DEFLECTING 90 DEGREES TO THE RIGHT ALONG THE NORTH LINE OF THE SOUTH 1/2 OF LOT 19, BLOCK 57, A DISTANCE OF SEVENTY-FIVE (75) FEET TO A POINT ON THE WEST LINE OF LOT 2, OF SAID BLOCK 57, THENCE RUN SOUTHERLY ALONG A LINE DEFLECTING 90 DEGREES TO THE RIGHT ALONG THE DIVIDING LINE BETWEEN LOTS I AND 2, AND LOT 20 AND THE SOUTH 1/2 OF LOT 19, BLOCK 57, A DISTANCE OF SEVENTY-FIVE (75) FEET TO A POINT, SAID POINT BEING THE SOUTHEASTERLY CORNER OF LOT 20, OR THE SOUTHWESTERLY CORNER OF LOT I, OF SAID BLOCK 57; THENCE RUN SOUTHEASTERLY ALONG A LINE DEFLECTING TO THE LEFT 4°05'08.2", A DISTANCE OF 70.178 FEEL TO A POINT, SAID POINT BEING THE NORTHEASTERLY CORNER OF LOT 3, OF SAID BLOCK 76, FISHER'S FIRST SUBDIVISION; THENCE RUN WESTERLY ALONG A LINE DEFLECTING TO THE RIGHT 94°05'08.2' ALONG THE NORTHERLY LINE OF SAID BLOCK 76, A DISTANCE OF EIGHTY (80) FEET TO THE POINT OF BEGINNING OF THE TRACT OF LAND HEREIN DESCRIBED, CONTAINING 0.254 ACRES, MORE OR LESS.

PARCEL 3

LOT 3, 4 AND 5, IN BLOCK 76, OF FISHER'S FIRST SUBDIVISION OF ALTON BEACH, ACCORDING TO THE PLAT THEREOF, AS RECORDED IN PLAT BOOK 2, AT PAGE 77, OF THE PUBLIC RECORD OF DADE COUNTY, FLORIDA.

MTCI
PRIVATE PROVIDER SERVICES, LLC

	REVIEWER INITIALS	DATE REVIEWED
BUILDING	EM	11-12-14
STRUCTURAL		
MECHANICAL		
ELECTRICAL		
PLUMBING		
SITE CIVIL		

SURVEYOR'S CERTIFICATION:

I HEREBY CERTIFY THAT THIS "BOUNDARY SURVEY" OF THE PROPERTY DESCRIBED HEREON IS TRUE AND CORRECT TO THE BEST OF MY KNOWLEDGE AND BELIEF AS RECENTLY SURVEYED AND DRAWN UNDER MY SUPERVISION AND DIRECTION. THIS SURVEY COMPLIES WITH THE MINIMUM TECHNICAL STANDARDS ADOPTED BY THE FLORIDA STATE BOARD OF SURVEYORS AND MAPPERS PURSUANT TO CHAPTER 5J-17, FLORIDA ADMINISTRATIVE CODE.

Schwebke-Shiskin & Associates, Inc.

BY: MARK STEVEN JOHNSON, SEC/TREASURER
PROFESSIONAL LAND SURVEYOR No. 4775
STATE OF FLORIDA.

REVISIONS

Date:	Order No.	Field Book	Remarks:	By:

BOUNDARY SURVEY

PREPARED FOR: HADDON HALL HOTEL OWNER, LLC

Section 17, Township 54 South, Range 41 East, Miami-Dade County, Florida

Schwebke-Shiskin & Associates, Inc.
LAND PLANNERS • ENGINEERS • LAND SURVEYORS
3240 CORPORATE WAY, MIRAMAR, FLORIDA 33025 TEL: (954) 435-7010 FAX: (954) 438-3288
CERTIFICATE OF AUTHORIZATION No. LB-87

NOTE: This sketch is not valid unless it bears the signature and the original raised seal of a Florida licensed surveyor and mapper.

This is a "Boundary Survey."

Drawn By: L.E.G. Survey Date: 9-21-13 Checked By: M.S.J. Date: 9-23-13
Order No. 201812 F.B. No.: 2020 Pg.30 Scale: AS SHOWN
File No. AJ-5101 Sheet 1 of 2 Sheet(s)

1 SITE SURVEY
SCALE: N.T.S.

APPROVED MIAMI BEACH FIRE DEPARTMENT

HADDON HALL
1500 COLLINS AVE
MIAMI BEACH, FL

KEYPLAN N.T.S.

REVISIONS

NO.	DESCRIPTION	ISSUE DATE

PERMIT SET

NORTH SEAL

Jonathan Cardello
Lic. # AR93391

ADD Inc Architecture Interiors Planning
One Biscayne Tower
Suite 1670
Two South
Biscayne Boulevard
Miami, Fl 33131
T. 305.482.8700
F. 305.482.8770
www.addinc.com
Lic. # AA26001507
Boston Miami

JOB NUMBER:	13036.00
CHECKED BY:	
ISSUE DATE:	JANUARY 24, 2014
SCALE:	N.T.S.

SHEET TITLE

SITE SURVEY

SHEET NUMBER

CS-1

COPYRIGHT ADD INC 2011

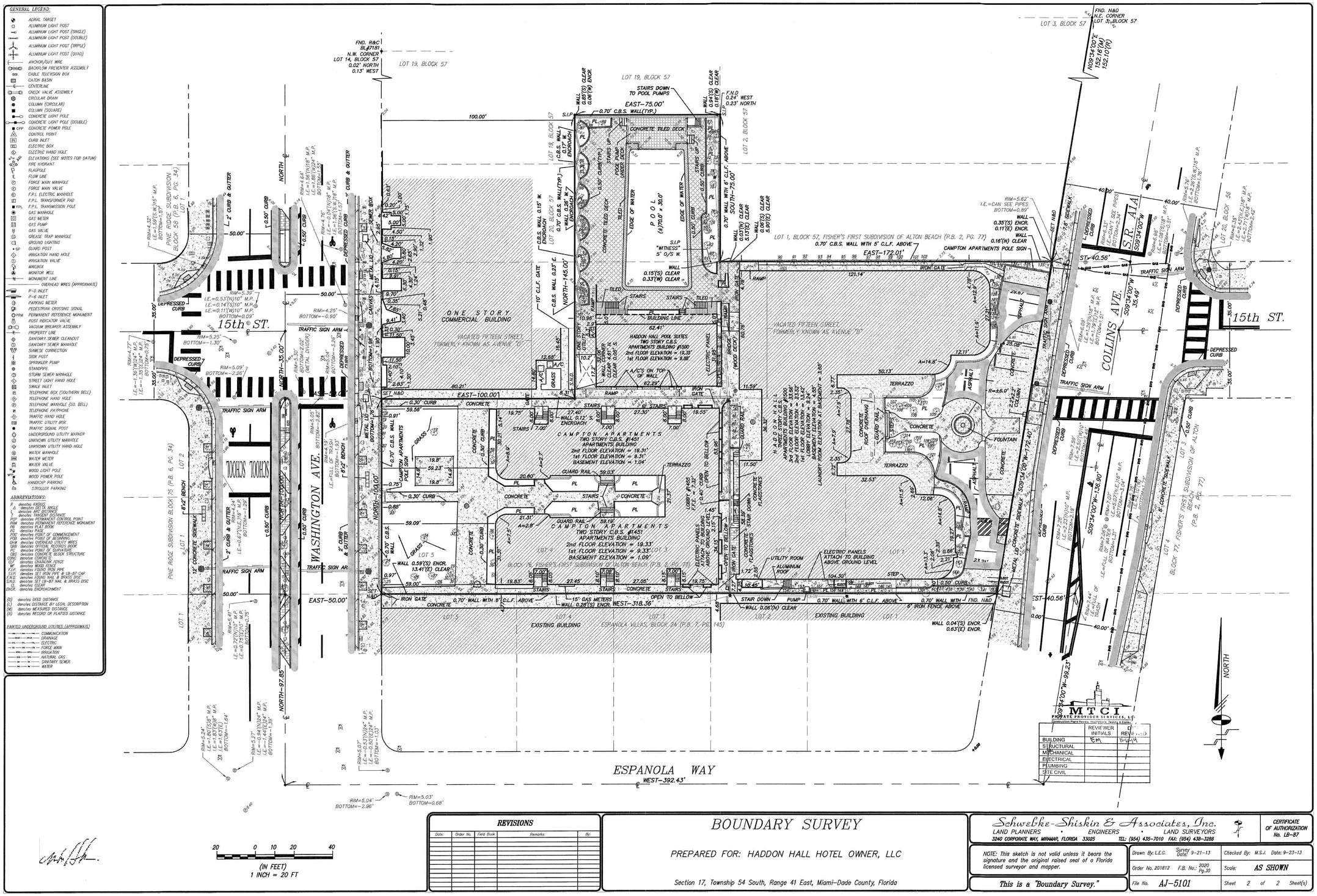

REVISIONS				
Date:	Order No.	Field Book	Remarks:	By:

BOUNDARY SURVEY

PREPARED FOR: HADDON HALL HOTEL OWNER, LLC

Section 17, Township 54 South, Range 41 East, Miami-Dade County, Florida

Schwebke-Shiskin & Associates, Inc.
LAND PLANNERS • ENGINEERS • LAND SURVEYORS
3240 CORPORATE WAY, MIRAMAR, FLORIDA 33025 TEL: (954) 435-7010 FAX: (954) 438-3288

CERTIFICATE OF AUTHORIZATION No. LB-87

NOTE: This sketch is not valid unless it bears the signature and the original raised seal of a Florida licensed surveyor and mapper.

This is a "Boundary Survey."

Drawn By: L.E.G.	Survey Date: 9-21-13	Checked By: M.S.J.	Date: 9-23-13
Order No. 201812	F.B. No.: 2020 Pg.30	Scale: AS SHOWN	
File No. AJ-5101		Sheet 2 of 2 Sheet(s)	

APPROVED MIAMI BEACH FIRE DEPARTMENT

1 SITE SURVEY
SCALE: N.T.S.

HADDON HALL
1500 COLLINS AVE
MIAMI BEACH, FL

KEYPLAN N.T.S.

REVISIONS

NO.	DESCRIPTION	ISSUE DATE

PERMIT SET

NORTH SEAL

Jonathan Cardello
Lic. # AR93391

ADD Inc Architecture Interiors Planning

One Biscayne Tower
Suite 1670
Two South
Biscayne Boulevard
Miami, Fl 33131
T. 305.482.8700
F. 305.482.8770
www.addinc.com
Lic. # AA26001507

Boston Miami

JOB NUMBER: 13036.00
CHECKED BY:
ISSUE DATE: JANUARY 24, 2014
SCALE: N.T.S.

SHEET TITLE

SITE SURVEY

SHEET NUMBER

CS-2

COPYRIGHT ADD INC 2011

GENERAL NOTES:

1. THE WORK CONSISTS OF FURNISHING ALL CONSTRUCTION, LABOR, EQUIPMENT AND MATERIALS AND PERFORMING ALL OPERATIONS IN CONNECTION WITH THE PAVING, GRADING AND DRAINAGE IMPROVEMENTS AS SHOWN ON THESE DRAWINGS.
2. THE CONTRACTOR SHALL ABIDE BY ALL NOTES AND CONDITIONS INDICATED ON THE CONSTRUCTION PLANS AND PERMITS. IF THE CONTRACTOR VIOLATES ANY CONDITION OF THE PERMIT AND WORK IS STOPPED BY THE STATE OR OTHER PUBLIC ENTITY, THEN ANY ADDITIONAL COSTS INCURRED BY THE CONTRACTOR SHALL BE PAID BY THE CONTRACTOR AND NOT CHARGED TO THE OWNER.
3. THE CONTRACTOR IS RESPONSIBLE FOR OBTAINING ALL LOCAL BUILDING PERMITS NECESSARY FOR THIS WORK. APRECONSTRUCTION MEETING WILL BE HELD ON SITE TO VERIFY DETAILS AND METHODS OF CONSTRUCTION.
4. EXCEPT AS NOTED ON THE PLANS, ALL MATERIALS AND CONSTRUCTION SHALL COMPLY WITH THE FLORIDA BUILDING CODE OR FLORIDA DEPARTMENT OF TRANSPORTATION STANDARD SPECIFICATIONS FOR ROAD AND BRIDGE CONSTRUCTION.
5. ALL ELEVATIONS ARE IN FEET AND ARE REFERRED TO THE NATIONAL GEODETIC VERTICAL DATUM (NGVD) OF 1929.
6. THE CONTRACTOR IS RESPONSIBLE FOR LOCATING ALL UNDERGROUND UTILITIES PRIOR TO CONSTRUCTION. ANY DISCREPANCIES IN THE PLANS WITH FIELD CONDITIONS SHALL BE BROUGHT TO THE IMMEDIATE ATTENTION OF THE ENGINEER. CONSTRUCTION SHALL NOT CONTINUE UNTIL THE ENGINEER HAS ADDRESSED THE DISCREPANCIES.
7. THE CONTRACTOR IS RESPONSIBLE FOR COORDINATING WITH OTHER UPLAND CONTRACTORS ON SITE.
8. THE ENGINEER IS RESPONSIBLE FOR OBTAINING ENVIRONMENTAL PERMITS FOR THE PROJECT. COPIES WILL BE PROVIDED TO THE CONTRACTOR, AND THE CONTRACTOR SHALL ABIDE BY ALL REGULATIONS AND PERMIT CONDITIONS.
9. FOR LEGEND SYMBOLS REFER TO SHEETS PGD-3, WS-1 AND SS-2.
10. GEOTECHNICAL REPORT COMPLETED BY ARDAMAN & ASSOCIATES, INC. DATED NOVEMBER 25, 2013.
11. SURVEY DATA PROVIDED BY SCHWEBKE-SHISKIN & ASSOCIATES, INC. DATED 09-23-2013.

DEMOLITION NOTES:

1. REMOVE ALL CONCRETE, ASPHALT, AND OTHER OBSTRUCTIONS WITHIN LIMITS OF CONSTRUCTION AS NOTED ON THE DEMOLITION PLAN. FOR TREE REMOVAL REFER TO LANDSCAPE PLANS.
2. ALL SIGNAGE TO BE REMOVED AND RELOCATED AS REQUIRED FOR NEW SIDEWALK CONSTRUCTION.
3. MAINTENANCE OF TRAFFIC PLANS TO BE PROVIDED BY THE CONTRACTOR TO THE CITY FOR APPROVAL.
4. STREET PARKING SPACES AND METERS TO BE COORDINATED WITH THE CITY OF MIAMI BEACH PARKING DEPARTMENT FOR REPLACEMENT OR RELOCATION.
5. CONTRACTOR SHALL REPLACE THE EXISTING METER CONCRETE BOXES WITH NEW PRE-FAB UNITS WHEN REPLACING THE CONCRETE SIDEWALK CONTRACTOR SHALL NOTIFY ALL UTILITIES DEPARTMENTS PRIOR TO ANY SITE DEMOLITION AND SIDEWALK DEMOLITION, COORDINATE WITH UTILITY COMPANIES TO DELETE ALL THOSE UTILITY BOXES THAT ARE ABANDONED OR WILL NOT BE IN SERVICE AFTER THIS PROPOSED CONSTRUCTION PROJECT.

CONSTRUCTION SAFETY:

1. ALL CONSTRUCTION SHALL BE DONE IN ACCORDANCE WITH THE RULES AND REGULATIONS OF THE OCCUPATION SAFETY AND HEALTH ADMINISTRATION (O.S.H.A.) AND THE MANUAL OF UNIFORM TRAFFIC CONTROL DEVICES (M.U.T.C.D.) AS WELL AS ANY APPLICABLE LOCAL AND STATE ORDINANCES.
2. ALL TRENCH EXCAVATION WORK SHALL BE IN COMPLIANCE WITH THE STATE OF FLORIDA "TRENCH SAFETY ACT", AND O.S.H.A. REQUIREMENTS.
3. WHERE EXCAVATIONS EXCEEDS FIVE FEET (5.0') IN DEPTH, THE CONTRACTOR SHALL PROVIDE DOCUMENTATION THAT THE TRENCH EXCAVATION WORK WILL COMPLY WITH THE APPLICABLE TRENCH SAFETY STANDARDS, AND IDENTIFY COMPLIANCE WITH THE APPLICABLE TRENCH SAFETY STANDARDS IN THE BID.

LAYOUT AND TESTING:

1. ALL CONSTRUCTION STAKEOUT SHALL BE PERFORMED BY AND PAID FOR BY THE CONTRACTOR UNDER THE SUPERVISION OF A FLORIDA REGISTERED SURVEYOR.
2. ALL TESTING AND INSPECTION FOR CONCRETE MATERIALS SHALL BE IN ACCORDANCE WITH FDOT SPECIFICATIONS AND SHALL BE PERFORMED BY AN INDEPENDENT TESTING LABORATORY PROVIDED BY THE OWNER.
3. CONTRACTOR SHALL PROVIDE THE ENGINEER WITH A SET OF AS-BUILT DRAWINGS IN SUFFICIENT DETAILS TO ILLUSTRATE THE HORIZONTAL AND VERTICAL COMPONENTS OF ABOVE AND BELOW GROUND STRUCTURES. AS-BUILTS DRAWINGS SHALL BE SIGNED AND SEALED BY A FLORIDA REGISTERED ENGINEER OR SURVEYOR AS APPROPRIATE.

INSPECTION:

THE CONTRACTOR SHALL NOTIFY THE ENGINEER A MINIMUM OF 24 HOURS PRIOR TO THE INSPECTION OF THE FOLLOWING ITEMS:

A. STORM DRAINAGE
B. WATER SYSTEM.
C. SANITARY SEWER.
D. SUBGRADE.
E. LIMEROCK BASE.
F. PAVEMENT.
G. FINAL.

SHOP DRAWING NOTES:

1. SHOP DRAWINGS SHALL BE SUBMITTED TO THE ENGINEER FOR REVIEW AND APPROVAL PRIOR TO MATERIAL PURCHASE AND/OR CONSTRUCTION.
2. PRECAST STRUCTURE SHOP DRAWINGS ARE REQUIRED.

TRAFFIC CONTROL:

1. MAINTENANCE OF TRAFFIC IN THE PUBLIC RIGHT-OF-WAY SHALL BE IN ACCORDANCE WITH THE F.D.O.T. AND M.U.T.C.D. REQUIREMENTS.
2. ALL OPEN TRENCHES AND HOLES NEAR WALKWAYS OR IN ROADWAYS OR WALKWAYS SHALL BE MARKED AND BARRICADED TO ENSURE THE SAFETY OF BOTH VEHICULAR AND PEDESTRIAN TRAFFIC.
3. NO OPEN TRENCHES OR HOLES IN THE VICINITY OF ROADWAYS, WALKWAYS OR THEIR SHOULDERS ARE TO BE LEFT OPEN DURING NIGHTTIME HOURS WITHOUT EXPRESS PERMISSION OF THE PUBLIC WORKS OR OTHER LOCAL GOVERNMENTAL AGENCIES.

PROJECT CLOSEOUT:

1. CONTRACTOR SHALL BE RESPONSIBLE FOR MAINTAINING CONSTRUCTION SITE DURING CONSTRUCTION AND FOR FINAL CLEAN-UP AT THE COMPLETION OF THE PROJECT.
2. THE CONTRACTOR SHALL RESTORE OR REPLACE ANY PUBLIC OR PRIVATE PROPERTY DAMAGED BY HIS WORK, EQUIPMENT, EMPLOYEES OR SUBCONTRACTORS TO AN EXISTING CONDITIONS PRIOR TO CONSTRUCTION.

EROSION CONTROL:

1. WHEN MATERIAL OR DEBRIS HAS WASHED OR FLOWED INTO OR BEEN PLACED IN WATER COURSES, DITCHES, DRAINS, CATCH BASINS, OR ELSEWHERE AS A RESULT OF THE CONTRACTOR'S OPERATIONS, SUCH MATERIAL OR DEBRIS SHALL BE REMOVED AND SATISFACTORILY DISPOSED OF DURING PROGRESS OF THE WORK, AND THE AREA KEPT IN A CLEAN AND NEAT CONDITION.
2. PROVIDE APPROPRIATE SILT BARRIERS IN ACCORDANCE WITH FDOT SPECIFICATIONS WHEN PERFORMING WORK ADJACENT TO DRAINAGE CANALS OR WATERWAYS.

INDEX OF SHEETS:

GEN-1	GENERAL INFORMATION AND NOTES
GEN-2	GENERAL NOTES CMB PWD NOTES
GEN-3	EXISTING CONDITIONS
PGD-1	PAVING, GRADING AND DRAINAGE SITE PLAN 1
PGD-2	PAVING, GRADING AND DRAINAGE SITE PLAN 2
PGD-3	PAVING, GRADING AND DRAINAGE SITE PLAN 3
PGD-4	PAVING AND DRAINAGE DETAILS 1
PGD-5	PAVING AND DRAINAGE DETAILS 2
PGD-6	PAVING AND DRAINAGE DETAILS 3
PGD-7	PAVING AND DRAINAGE DETAILS 4
WS-1	WATER SERVICE SITE PLAN 1
WS-2	WATER SERVICE SITE PLAN 2
WS-3	WATER SERVICE DETAILS 1
WS-4	FIRE LINE DETAILS 2
SS-1	SANITARY SEWER SERVICE SITE PLAN 1
SS-2	SANITARY SEWER SERVICE SITE PLAN 2
SS-3	SANITARY SEWER SERVICE PROFILE & NOTES
SS-4	SANITARY SEWER CITY DETAILS 1
SS-5	SANITARY SEWER DETAILS 2

HADDON HALL HOTEL
1500 COLLINS AVE, MIAMI BEACH, FL
SITE CIVIL PLANS

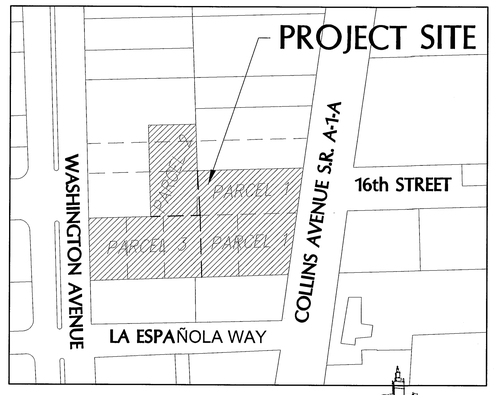

LOCATION SKETCH
SCALE: 1" = 100'

	REVIEWER INITIALS	DATE REVIEWED
BUILDING		
STRUCTURAL		
MECHANICAL		
ELECTRICAL		
PLUMBING		

LEGAL DESCRIPTIONS

PARCEL 1

LOTS ONE (1) AND TWO (2) OF BLOCK SEVENTY-SIX (76) OF FISHER'S FIRST SUBDIVISION OF ALTON BEACH, ~~ACCORDING TO~~ THE PLAT THEREOF RECORDED IN PLAT BOOK 2, AT PAGE 77 OF THE PUBLIC RECORDS OF DADE COUNTY, ~~FLORIDA, AND ALSO THE~~ FOLLOWING DESCRIBED LAND: THAT PART OF VACATED FIFTEENTH STREET FORMERLY KNOWN AS AVENUE D, DESCRIBED AS FOLLOWS:
BEGIN AT THE NORTHEAST CORNER OF LOT I OF BLOCK 76 OF FISHER'S FIRST SUBDIVISION OF ALTON BEACH, ACCORDING TO THE PLAT THEREOF RECORDED IN PLAT BOOK 2, PAGE 77, OF THE PUBLIC RECORDS OF DADE COUNTY, FLORIDA; THENCE NORTHEASTERLY ALONG WEST LINE OF COLLINS AVENUE A DISTANCE OF 70.98 FEET TO THE SOUTHEAST CORNER OF LOT I, OF BLOCK 57 OF THE AFORESAID SUBDIVISION; THENCE WESTERLY ALONG THE SOUTHERLY LINE OF LOT I, BLOCK 57 OF THE AFORESAID SUBDIVISION A DISTANCE OF 172.01 FEET, MORE OR LESS, TO A POINT WHERE THE WESTERLY LINE OF LOT 2 OF BLOCK 76 OF THE AFORESAID SUBDIVISION EXTENDED NORTHERLY INTERSECTS THE SOUTHERLY LINE OF LOT I, OF BLOCK 57 OF THE AFORESAID SUBDIVISION; THENCE SOUTHERLY A DISTANCE OF 70 FEET TO THE NORTHWEST CORNER OF LOT 2 OF BLOCK 76 OF THE AFORESAID SUBDIVISION; THENCE EASTERLY ALONG THE NORTHERLY LINE OF LOT 2 AND I OF BLOCK 76 OF THE AFORESAID SUBDIVISION, A DISTANCE OF 155.21 FEET TO THE POINT OF BEGINNING.

PARCEL 2

COMMENCING AT THE NORTHWEST CORNER OF LOT 5, BLOCK 76 OF FISHER'S FIRST SUBDIVISION OF ALTON BEACH, AS SAME IS SHOWN UPON A RECORDED PLAT OF SAID SUBDIVISION, RECORDED IN PLAT BOOK 2, AT PAGE 77, OF THE PUBLIC RECORDS OF DADE COUNTY, FLORIDA: THENCE RUN EAST ALONG THE NORTH LINE OF SAID BLOCK 76, A DISTANCE OF ONE HUNDRED (100) FEET TO THE POINT OF BEGINNING OF THE TRACT OF LAND HEREIN DESCRIBED:

FROM SAID POINT OF BEGINNING RUN NORTH ALONG A LINE DEFLECTING 90 DEGREES TO THE LEFT, SAID LINE BEING PARALLEL TO AND ONE HUNDRED (100) FEET DISTANT EASTERLY FROM THE EASTERLY LINE OF WASHINGTON AVENUE, AS ABOVE RECORDED, A DISTANCE OF ONE HUNDRED FORTY-FIVE (145) FEET TO A POINT ON THE NORTH LINE OF THE SOUTH 1/2 OF LOT 19, BLOCK 57, FISHER'S FIRST SUBDIVISION OF ALTON BEACH, AS RECORDED IN PLAT BOOK 2, AT PAGE 77, PUBLIC RECORDS OF DADE COUNTY, FLORIDA; THENCE RUN EASTERLY ALONG A LINE DEFLECTING 90 DEGREES TO THE RIGHT ALONG THE NORTH LINE OF THE SOUTH 1/2 OF LOT 19, BLOCK 57, A DISTANCE OF SEVENTY-FIVE (75) FEET TO A POINT ON THE WEST LINE OF LOT 2, OF SAID BLOCK 57, THENCE RUN SOUTHERLY ALONG A LINE DEFLECTING 90 DEGREES TO THE RIGHT ALONG THE DIVIDING LINE BETWEEN LOTS I AND 2, AND LOT 20 AND THE SOUTH 1/2 OF LOT 19, BLOCK 57, A DISTANCE OF SEVENTY-FIVE (75) FEET TO A POINT, SAID POINT BEING THE SOUTHEASTERLY CORNER OF LOT 20, OR THE SOUTHWESTERLY CORNER OF LOT I, OF SAID BLOCK 57; THENCE RUN SOUTHEASTERLY ALONG A LINE DEFLECTING TO THE LEFT 4°05'08.2", A DISTANCE OF 70.178 FEEL TO A POINT, SAID POINT BEING THE NORTHEASTERLY CORNER OF LOT 3, OF SAID BLOCK 76, FISHER'S FIRST SUBDIVISION; THENCE RUN WESTERLY ALONG A LINE DEFLECTING TO THE RIGHT 94°05'08.2' ALONG THE NORTHERLY LINE OF SAID BLOCK 76, A DISTANCE OF EIGHTY (80) FEET TO THE POINT OF BEGINNING OF THE TRACT OF LAND HEREIN DESCRIBED, CONTAINING 0.254 ACRES, MORE OR LESS.

PARCEL 3

LOT 3, 4 AND 5, IN BLOCK 76, OF FISHER'S FIRST SUBDIVISION OF ALTON BEACH, ACCORDING TO THE PLAT THEREOF, AS RECORDED IN PLAT BOOK 2, AT PAGE 77, OF THE PUBLIC RECORD OF DADE COUNTY, FLORIDA.

APPROVED
MIAMI BEACH
FIRE DEPARTMENT

NOTE: ALL SCALES INDICATED PERTAIN TO FULL SIZE DRAWINGS 22"x34"

HADDON HALL HOTEL

1500 COLLINS AVENUE
MIAMI BEACH, FL 33139

COASTAL SYSTEMS INTERNATIONAL, INC.
464 South Dixie Highway
Coral Gables, Florida 33146
Tel: 305-661-3655
Fax: 305-661-1914
www.CoastalSystemsInt.com
State of Florida EB #7087
Coastal, Environmental,
Civil Engineering and Management

CONSULTANTS

ISSUE	DATE	DESCRIPTION
	1/27/14	PERMIT SET

PROJECT NO: 330300
DATUM: NGVD
DRAWN BY: OB
CHECKED BY: AP

ENGINEER OF RECORD

DRAWING VALID WITHOUT EMBOSSED SEAL
2/3/14
Andres Perez
66507

GENERAL INFORMATION AND NOTES

GEN-1

1 OF 20 SHEETS

CITY OF MIAMI BEACH PUBLIC WORKS DEPARTMENT

GENERAL NOTES

1. ALL APPLICABLE PERMITS MUST BE OBTAINED PRIOR TO COMMENCEMENT OF CONSTRUCTION.
2. ALL APPLICABLE FEES AND CHARGES MUST BE PAID PRIOR TO COMMENCEMENT OF CONSTRUCTION.
3. ALL MATERIALS AND CONSTRUCTION UNDER THIS PROJECT SHALL BE IN STRICT ACCORDANCE WITH THE REQUIREMENTS OF THE PUBLIC WORKS DEPARTMENT, CITY OF MIAMI BEACH.
4. THE LOCATIONS AND ELEVATIONS OF EXISTING UTILITIES AS SHOWN ON THE APPROVED PLANS ARE TO BE VERIFIED IN THE FIELD BY THE CONTRACTOR. APPROVAL OF DEVELOPMENT PLANS BY THE PUBLIC WORKS DEPT. THE CITY OF MIAMI BEACH IN NO WAY IMPLIES VERIFICATION OF THE ACCURACY OF THOSE PLANS OR FEATURES DEPICTED THEREON. THE CONTRACTOR SHALL NOTIFY THE CITY ENGINEER OF ANY DISCREPANCY OR VARIATION FROM THE APPROVED DRAWINGS.
5. THE CONTRACTOR SHALL BE RESPONSIBLE AT ALL TIMES THROUGHOUT THE DURATION OF CONSTRUCTION FOR THE PROTECTION OF EXISTING AND NEWLY INSTALLED UTILITIES AND IMPROVEMENTS FROM DAMAGE, DISRUPTION OF SERVICE, OR DESTRUCTION. THE CONTRACTOR SHALL BE RESPONSIBLE FOR TAKING SUCH MEASURES AS NECESSARY TO PROTECT THE HEALTH, SAFETY, AND WELFARE OF THOSE PERSONS HAVING ACCESS TO THE WORK SITE.
6. THE CONTRACTOR SHALL BE RESPONSIBLE FOR OBTAINING LOCATIONS OF ALL UTILITIES, AND NOTIFICATION OF SUNSHINE STATE ONE CALL, CITY OF MIAMI BEACH, PUBLIC WORKS, 48 HOURS PRIOR TO CONSTRUCTION.
7. PRIOR TO THE ISSUANCE OF ANY CONSTRUCTION PERMIT, A RECONSTRUCTION MEETING WILL BE HELD WITH THE PUBLIC WORKS DEPT. OF THE CITY. THE CONTRACTOR AND OTHER INTERESTED PARTIES SHALL ATTEND THE MEETING.
8. THE CONTRACTOR SHALL BE RESPONSIBLE FOR THE SCHEDULING OF, AND PAYMENT FOR SUCH TESTS AS MAY BE DEEMED NECESSARY BY THE CITY ENGINEER, AND AS CALLED FOR IN THE PLANS AND SPECIFICATIONS.
9. THE CONTRACTOR SHALL MAINTAIN A CURRENT APPROVED SET OF CONSTRUCTION PLANS ON SITE. THE PLANS ARE TO BE MADE AVAILABLE TO THE ENGINEERING INSPECTOR OF THE CITY OF MIAMI BEACH OR HIS DESIGNEE UPON REQUEST.
10. WHERE SANITARY SEWER MAINS CROSS UNDER WATER MAINS WITH LESS THAN 18 INCHES VERTICAL CLEARANCE, OR WHERE THE SANITARY SEWER CROSSES ABOVE A WATER MAIN, THE SANITARY SEWER SHALL BE OF CLASS 52 DUCTILE IRON PIPE OR AWWA C-900 PVC PRESSURE PIPE FOR A CONTINUOUS LENGTH OF 20 FEET CENTERED AT THE WATER MAIN, PRESSURE TESTED AT THAT LOCATION.
11. THE CONTRACTOR SHALL PROVIDE ACCESS AND ASSISTANCE TO THE CITY ENGINEER OR HIS DESIGNEE TO MAKE INSPECTIONS, AS NECESSARY, DURING CONSTRUCTION.
12. NO DEVIATION FROM APPROVED PLANS SHALL BE PERMITTED WITHOUT THE WRITTEN CONSENT OF THE CITY ENGINEER OR HIS DESIGNEE.
13. ALL WATER MAIN LINE VALVES SHALL BE INSTALLED COMPLETE WITH 10" RISER PIPES AND NO. 3 VALVE BOXES. FIRE HYDRANTS AND SERVICE VALVES SHALL BE INSTALLED COMPLETE WITH 6" RISER PIPES AND NO. 2 VALVE BOXES.
14. CONTRACTOR MUST CALL CITY OF MIAMI BEACH, PUBLIC WORKS DEPARTMENT, TO ARRANGE FOR A PERMIT AND A RECONSTRUCTION MEETING 48 HOURS PRIOR TO START OF CONSTRUCTION.
15. ENGINEERING PERSONNEL WILL INSPECT ALL FACILITIES APPROVED BY THEIR OFFICE. ALL OTHER REQUIREMENTS OF THE PERMITTING AGENCY SHALL BE IN ACCORDANCE WITH THEIR STANDARD REQUIREMENTS.
16. TRENCH EXCAVATIONS IN EXCESS OF 5 FEET DEEP SHALL COMPLY WITH THE TRENCH SAFETY ACT AS PER O.S.H.A. STANDARD 29 CFR S.926.650 SUBPART P IN STATUTES. THE TRENCHES AND DITCHES SHALL BE PROTECTED IN ACCORDANCE WITH RULE 38c 43.02 FAC AND 6A-1,095(2).
17. ERECTION OR INSTALLATION OF APPROPRIATE SAFETY AND WARNING DEVICES WILL BE REQUIRED DURING THE COURSE OF CONSTRUCTION. SAID DEVICES WILL BE IN ACCORDANCE WITH THE REQUIREMENTS OF THE DEPARTMENT OF TRANSPORTATION'S "MANUAL ON TRAFFIC CONTROL AND SAFETY PRACTICES" AND THE DADE COUNTY PUBLIC WORKS MANUAL.
18. PLANS AND SPECIFICATIONS REQUIRE THAT COMPACTED BACKFILL BE PLACED ALONGSIDE OF AND OVER ALL UTILITIES. THE CITY ENGINEER REQUIRES THAT COMPACTION TESTS BE TAKEN TO VERIFY BACKFILL COMPACTION. THE COST OF SUCH COMPACTION TESTS WILL BE BORNE BY THE CITY. THE RETESTING COST, DUE TO FAILURE OF THE COMPACTION TEST, WILL BE PAID BY THE CONTRACTOR.
19. WORK PERFORMED UNDER THIS PROJECT WILL NOT BE CONSIDERED COMPLETE UNTIL THE FOLLOWING DOCUMENTS ARE RECEIVED BY THE CITY OF MIAMI BEACH, PUBLIC WORKS DEPARTMENT
   - A. CONTRACTOR'S, SUBCONTRACTOR'S AND SUPPLIER'S WAIVER AND RELEASE OF LIEN.
   - B. CONTRACTOR'S LETTER OF WARRANTY (I.E. LETTER OF AGREEMENT).
   - C. "AS BUILT" 4 MIL MILARS 24"X36" SHOWING SPECIFIC LOCATIONS, DEPTH, ETC., OF ALL CITY FACILITIES AS LOCATED BY A LICENSED SURVEYOR, ALONG WITH (2) PRINTS OF THE "AS BUILT" WHICH HAVE BEEN SIGNED AND SEALED BY A LAND SURVEYOR REGISTERED IN THE STATE OF FLORIDA AND A DIGITAL COPY "AS-BUILT" DRAWING.
20. ALL ELEVATIONS REFER TO U.S.C.E. M.L.W. BAY DATUM FOR AS-BUILT.
21. PROVIDE RESTRAINING BY THE USE OF FIELD LOX GASKET ON TYTON JOINT PIPE AND AS MANUFACTURED BY U.S. PIPE

PUBLIC WORKS RIGHT OF WAY NOTES:

1. ANY WORK, USE OF EQUIPMENT, AND/OR IMPROVEMENTS WITHIN THE RIGHT-OF-WAY, INCLUDING LANDSCAPING AND IRRIGATION, REQUIRE A SEPARATE PUBLIC WORKS DEPARTMENT RIGHT-OF-WAY CONSTRUCTION PERMIT.
2. ALL WORK IN THE PUBLIC RIGHT OF WAY WILL BE UNDER A SEPARATE RIGHT OF WAY CONSTRUCTION PERMIT.
3. LANDSCAPE IMPROVEMENTS WITHIN THE RIGHT-OF-WAY REQUIRE PRELIMINARY APPROVALS FROM THE PLANNING DEPARTMENT AND THE PARKS AND RECREATION DEPARTMENT PRIOR TO APPLYING FOR A PUBLIC WORKS DEPARTMENT RIGHT-OF-WAY CONSTRUCTION PERMIT.
4. REMOVE AND REPLACE SIDEWALK AND RECONSTRUCT SWALES WITHIN PUBLIC RIGHTS-OF-WAY AND EASEMENTS ADJACENT TO PROPERTY LINES.
5. MILL AND RESURFACE THE DRIVING LANE ALONG THE PROPERTY OR THE ENTIRE ALLEY ADJACENT TO THE PROPERTY AN AVERAGE OF 2 INCHES (USING TYPE S-III ASPHALT MIX DESIGN).

STANDARD SEPARATION STATEMENT FOR WATER AND SEWER CONFLICTS

1. SANITARY SEWERS, FORCE MAINS, AND STORM SEWERS SHOULD CROSS UNDER WATER MAINS WHENEVER POSSIBLE. SANITARY SEWERS, FORCE MAINS AND STORMS SEWERS CROSSING WATER MAINS SHALL BE LAID TO PROVIDE A MINIMUM VERTICAL DISTANCE OF 18 INCHES BETWEEN THE INVERT OF THE UPPER PIPE AND THE CROWN OF THE LOWER PIPE WHENEVER POSSIBLE.
2. WHERE SANITARY SEWERS, FORCE MAINS AND STORM SEWERS MUST CROSS A WATER MAIN WITH LESS THAN 18 INCHES VERTICAL DISTANCE, BOTH THE SEWER AND THE WATER MAIN SHALL BE CONSTRUCTED OF DUCTILE IRON PIPE (DIP) AT THE CROSSING. (DIP IS NOT REQUIRED FOR STORM SEWERS.) SUFFICIENT LENGHTS OF DIP MUST BE USED TO PROVIDE A MINIMUM SEPARATION OF 10 FEET BETWEEN ANY TWO JOINTS. ALL JOINTS ON THE WATER MAIN WITHIN 20 FEET OF THE CROSSING MUST MECHANICALLY RESTRAINED. A MINIMUM VERTICAL CLEARANCE OF 6 INCHES MUST BE MAINTAINED AT ALL CROSSINGS.
3. ALL CROSSINGS SHALL BE ARRANGED TO THAT THE SEWER PIPE JOINTS AND THE WATER MAIN PIP JOINTS ARE EQUIDISTANT FROM THE POINT OF CROSSING (PIPES CENTERED ON THE CROSSING).
4. WHERE A NEW PIPE CONFLICTS WITH AN EXISTING PIPE WITH LESS THAN 18 INCHES VERTICAL CLEARANCE, THE NEW PIPE SHALL BE CONSTRUCTED OF DIP (EXCEPT STORM SEWERS) AND THE NEW PIPE SHALL BE ARRANGED TO MEET THE CROSSING REQUIREMENTS ABOVE.
5. A MINIMUM 10-FOOT HORIZONTAL SEPARATION SHALL BE MAINTAINED BETWEEN ANY TYPE OF SEWER AND WATER MAIN IN PARALLEL INSTALLATIONS WHENEVER POSSIBLE.
6. IN CASES WHERE IT IS NOT POSSIBLE TO MAINTAIN A 10-FOOT HORIZONTAL SEPARATION, THE WATER MAIN MUST BE LAID IN A SEPARATE TRENCH OR ON AN UNDISTURBED EARTH SHELF LOCATED ON ONE SIDE OF THE SEWER OR FORCE MAIN AT SUCH AN ELEVATION THAT THE BOTTOM OF THE WATER MAIN IS AT LEAST 18 INCHES ABOVE THE TOP OF THE SEWER.
7. WHERE IT IS NOT POSSIBLE TO MAINTAIN A VERTICAL DISTANCE OF 18 INCHES IN PARALLEL INSTALLATIONS, THE WATER MAIN SHALL BE CONSTRUCTED OF DIP AND THE SEWER OR THE FORCE MAIN SHALL BE CONSTRUCTED OF DIP (EXCEPT STORM SEWERS) WITH A MINIMUM VERTICAL DISTANCE OF 6 INCHES. THE WATER MAIN SHOULD ALWAYS BE ABOVE THE SEWER. JOINTS ON THE WATER MAIN SHALL BE LOCATED AS FAR APART AS POSSIBLE FROM JOINTS ON THE SEWER OR FORCE MAIN (STAGGERED JOINTS).
8. ALL DIP SHALL BE CLASS 50 OR HIGHER. ADEQUATE PROTECTIVE MEASURES AGAINST CORROSION SHALL BE USED AS DETERMINED BY THE DESIGN ENGINEER.
9. MAXIMUM OBTAINABLE SEPARATION OF RECLAIMED WATER LINES AND DOMESTIC WATER LINES SHALL BE PRACTICED. A MINIMUM HORIZONTAL SEPARATION OF FIVE FEET (CENTER TO CENTER) OR THREE FEET (OUTSIDE TO OUTSIDE), SHALL BE MAINTAINED BETWEEN RECLAIMED WATER LINES AND EITHER POTABLE WATER MAINS OR SEWAGE COLLECTION LINES. A MINIMUM VERTICAL CLEARANCE OF 18 INCHES MUST BE MAINTAINED BETWEEN RECLAIMED WATER LINES AND POTABLE WATER MAINS OR SEWAGE COLLECTION LINES. AT CROSSINGS PROVISIONS OF FAC RULE 17-604 AND 10 STATES STANDARDS APPLY.

ABBREVIATIONS

AC.	ACRES
APPROX.	APPROXIMATE
BLDG.	BUILDING
CL	CENTER LINE
C.O.	CLEAN OUT
CONC.	CONCRETE
CU. FT.	CUBIC FOOT
CU. IN.	CUBIC INCH
CU. YD.	CUBIC YARD
DEPT.	DEPARTMENT
DIA./ø	DIAMETER
DI.P.	DUCTILE IRON PIPE
DWG	DRAWING
E.	EAST
EA.	EACH
ELEV. / EL.	ELEVATION
ELEC.	ELECTRIC/ELECTRICAL
EOP	EDGE OF PAVEMENT
EXIST.	EXISTING
FH	FIRE HYDRANT
FM	FORCE MAIN
FT.	FOOT/FEET
GALV.	GALVANIZED
G.S.P.	GALVANIZED STEEL PIPE
ID	INSIDE DIAMETER
IN	INCH
INV. EL.	INVERT ELEVATION
LF	LINEAR FEET
MAX.	MAXIMUM
MIN.	MINIMUM
MHW	MEAN HIGH WATER
MHHW	MEAN HIGHER HIGH WATER
MLW	MEAN LOW WATER
MSL	MEAN SEA LEVEL
N. / NO.	NORTH
N.A. / N/A	NOT APPLICABLE
NE	NORTHEAST
NTS	NOT TO SCALE
NO./#	NUMBER
O.C.	ON CENTER
O.D.	OUTSIDE DIAMETER
PCF	POUNDS PER CUBIC FOOT
P.E.	PROFESSIONAL ENGINEER
PERF.	PERFORATE
PREFAB.	PREFABRICATED
PSF	POUNDS PER SQUARE FOOT
PSI	POUNDS PER SQUARE INCH
R / RAD.	RADIUS
REBAR	REINFORCING BAR
REINF.	REINFORCING
R/W	RIGHT OF WAY
S. / SO.	SOUTH
SE	SOUTHEAST
SPEC	SPECIFICATION
SQ.	SQUARE
SQ. FT.	SQUARE FOOT
SQ. IN.	SQUARE INCH
SQ. YD.	SQUARE YARD
SS	STAINLESS STEEL
ST	STORM
STRUC.	STRUCTURAL
SW	SOUTHWEST
THRU	THROUGH
T.B.R.	TO BE REMOVED
T.O.C. / TOC	TOP OF CURB
T.O.G.	TOP OF GRATE
T.O.W.	TOP OF WALL
TYP.	TYPICAL
UTIL. / UTL.	UTILITY
VERT.	VERTICAL
W.	WEST
WWF	WELDED WIRE FABRIC
YD	YARD

EARTHWORK AND COMPACTION NOTES:

1. EXISTING ON-SITE BASE MATERIAL SHALL NOT BE REUSED FOR BASE CONSTRUCTION, BUT MAY BE USED FOR BACKFILL AROUND UTILITY AND DRAINAGE LINES, AND FOR SUBGRADE CONSTRUCTION, AND FOR GENERAL FILL AS APPROVED BY THE ENGINEER.
2. ALL SUBGRADE UNDER PAVED AREAS SHALL HAVE A MINIMUM L.B.R. VALUE OF 40 AND SHALL BE COMPACTED TO 95% OF THE MAXIMUM DENSITY AS DETERMINED BY AASHTO T-180.
3. ALL FILL MATERIAL IN AREAS NOT TO BE PAVED SHALL BE COMPACTED TO 90% OF THE MAXIMUM DENSITY AS DETERMINED BY AASHTO T-180.
4. ALL ORGANIC AND OTHER UNSUITABLE MATERIAL WITHIN THREE (3) FEET OF FINISHED GRADE AREAS TO BE PAVED SHALL BE REMOVED.
5. SUITABLE BACKFILL SHALL BE MINIMUM L.B.R. 40 MATERIAL COMPACTED TO 95% OF THE MAXIMUM DENSITY AS DETERMINED BY AASHTO T-180 FOR A MINIMUM OF THREE (3) FEET BEYOND THE PERIMETER OF THE PAVING.

STORM DRAINAGE NOTES:

1. HIGH DENSITY POLYETHYLENE PIPE (H.D.P.E.) - PIPE SHALL BE CORRUGATED SMOOTH BORE POLYETHYLENE PIPE (N-12 PRO LINK ULTRA) OR APPROVED EQUAL, MANUFACTURED IN CONFORMANCE WITH ASTM M294. PIPE SHALL HAVE BUILT-IN BELL JOINT WITH RUBBER GASKET IN CONFORMANCE WITH ASTM F477. PIPE COUPLING BANDS IF NEEDED SHALL BE SPLIT/SPLIT PREMIUM REQUIRING MAXIMUM PULL-APART RESISTANT.
2. POLYVINYL CHLORIDE PIPE (PVC) - PLASTIC PIPE SHALL CONFORM WITH ASTM D3034, TYPE PSM, POLYVINYL CHLORIDE (PVC) MATERIAL; BELL AND SPIGOT STYLE SOLVENT SEALED END JOINTS.
3. PROVIDE EXCAVATION, BEDDING BACKFILL AND ASSOCIATED DRAINAGE APPARATUSES IN ACCORDANCE WITH DETAILS IN THE PLANS.

EXFILTRATION SYSTEM NOTES:

1. ANY CONFLICT WITH EXISTING OR PROPOSED UTILITIES SHALL IMMEDIATELY BE BROUGHT TO THE ATTENTION OF THE ENGINEER. ANY IMPERMEABLE MATERIAL ENCOUNTERED IN THE EXCAVATION FOR THE SYSTEM SHALL BE REMOVED AS DIRECTED BY THE ENGINEER.
2. THE TRENCH LINER SHALL BE TYPE D-3 PER F.D.O.T. INDEX 199 OR APPROVED EQUAL. THE LINER SHALL BE USED ON THE SIDES AND TOP OF THE EXFILTRATION TRENCH. THE TOP SECTION OF THE MATERIAL SHALL BE LAPPED A MINIMUM OF 24 INCHES AND THE CONTRACTOR SHALL AVOID BUNCHING OF THE FABRIC DURING BACKFILLING.
3. PERFORATED PIPE SHALL TERMINATE FIVE FEET FROM THE DRAINAGE STRUCTURE. THE REMAINING FIVE FEET SHALL BE NON-PERFORATED PIPE.
4. PERFORATED PIPE WITHIN THE DRAIN FIELD SHALL HAVE 3/8 INCH PERFORATIONS 360° AROUND THE PIPE WITH APPROXIMATELY 120 PERFORATIONS PER FOOT OF PIPE.
5. PIPES SHALL TERMINATE TWO FEET FROM THE END OF THE TRENCH OR CONNECT TO ADDITIONAL CATCH BASINS.

PAVING NOTES:

1. PRIOR TO PLACEMENT OF ANY ASPHALT OR CONCRETE PAVEMENT THE CONTRACTOR SHALL SUBMIT TO THE ENGINEER OF RECORD "AS-BUILT" PLANS. SHOWING LIMEROCK BASE GRADES AND ALL DRAINAGE, WATER, AND SEWER IMPROVEMENTS. PAVING OPERATIONS SHALL NOT COMMENCE UNTIL THE ENGINEER OF RECORD AND THE APPROPRIATE PERMITTING AGENCIES HAVE REVIEWED AND APPROVED THE "AS-BUILTS".
2. ALL REQUIRED DENSITY AND L.B.R. TEST RESULTS FOR SUBGRADE SHALL BE PROVIDED TO AND APPROVED BY THE ENGINEER OF RECORD AND THE PERMITTING AGENCIES PRIOR TO PLACING THE LIMEROCK BASE MATERIAL.
3. ALL REQUIRED DENSITY AND L.B.R. TEST RESULTS FOR LIMEROCK SHALL BE PROVIDED TO AND APPROVED BY THE ENGINEER OF RECORD AND THE PERMITTING AGENCIES PRIOR TO PLACING ASPHALT.
4. ALL UNDERGROUND FACILITIES, INCLUDING BUT NOT LIMITED TO WATER, SEWER, STORM DRAINAGE, SLEEVES FOR PUBLIC UTILITIES AND IRRIGATION LINES SHALL BE INSTALLED PRIOR TO COMPACTION OF ROAD SUBGRADE AND INSTALLATION OF PAVEMENT BASE MATERIAL.
5. ALL EXISTING PAVEMENT CUT OR DAMAGED BY CONSTRUCTION SHALL BE PROPERLY RESTORED AT CONTRACTOR'S EXPENSE.
6. BASE COURSE SHALL BE CRUSHED LIMEROCK IN ACCORDANCE WITH FDOT SPECIFICATION 200.
7. ALL LIMEROCK BASE UNDER PAVED AREAS SHALL HAVE A MINIMUM L.B.R. VALUE OF 100, AND SHALL BE COMPACTED TO 98% OF THE MAXIMUM DENSITY AS DETERMINED BY AASHTO T-180.
8. LIMEROCK BASE MATERIAL SHALL BE IN THE COMPACTION THICKNESS SHOWN ON THE PLANS AND SHALL BE COMPACTED TO 98% OF THE MAXIMUM DENSITY AS DETERMINED BY AASHTO T180-C.
9. LIMEROCK BASE MATERIAL SHALL BE PLACED IN MAXIMUM 6" LIFTS. BASES GREATER THAN 6" SHALL BE PLACED IN TWO OR MORE EQUAL LIFTS.
10. ALL SUBGRADE, LIMEROCK AND ASPHALT TESTS REQUIRED SHALL BE TAKEN AT THE DIRECTION OF THE ENGINEER OF RECORD AND/OR THE LOCAL PERMIT AGENCY.
11. THE FINISHED SURFACE OF THE BASE COURSE AND THAT OF THE WEARING SURFACE SHALL NOT VARY MORE THAN 1/4" FROM THE TEMPLATE. ANY IRREGULARITIES EXCEEDING THIS LIMIT SHALL BE CORRECTED.
12. DENSITY TESTS SHALL BE TAKEN BY AN INDEPENDENT TESTING LABORATORY AS DIRECTED BY THE ENGINEER AND THE PERMIT AGENCY.

MTCI
PRIVATE PROVIDER SERVICES, LLC
Construction Plans Review, Inspections, Testing & Consulting

	REVIEWER INITIALS	DATE REVIEWED
BUILDING		
STRUCTURAL		
MECHANICAL		
ELECTRICAL		
PLUMBING		
SITE CIVIL		

APPROVED
MIAMI BEACH
FIRE DEPARTMENT

NOTE:
ALL SCALES INDICATED PERTAIN TO FULL SIZE DRAWINGS 22"x34"

HADDON HALL HOTEL

1500 COLLINS AVENUE
MIAMI BEACH, FL 33139

COASTAL SYSTEMS INTERNATIONAL

COASTAL SYSTEMS INTERNATIONAL, INC.
464 South Dixie Highway
Coral Gables, Florida 33146
Tel: 305-661-3655
Fax: 305-661-1914
www.CoastalSystemsInt.com
State of Florida EB #7087
Coastal, Environmental,
Civil Engineering and Management

CONSULTANTS

ISSUE	DATE	DESCRIPTION
	1/27/14	PERMIT SET

PROJECT NO: 330300
DATUM: NGVD
DRAWN BY: OB
CHECKED BY: AP

ENGINEER OF RECORD

DRAWING NOT VALID WITHOUT EMBOSSED SEAL
2/3/14
Andres Perez
66507

GENERAL NOTES AND CMB PWD NOTES

GEN-2

2 OF 20 SHEETS

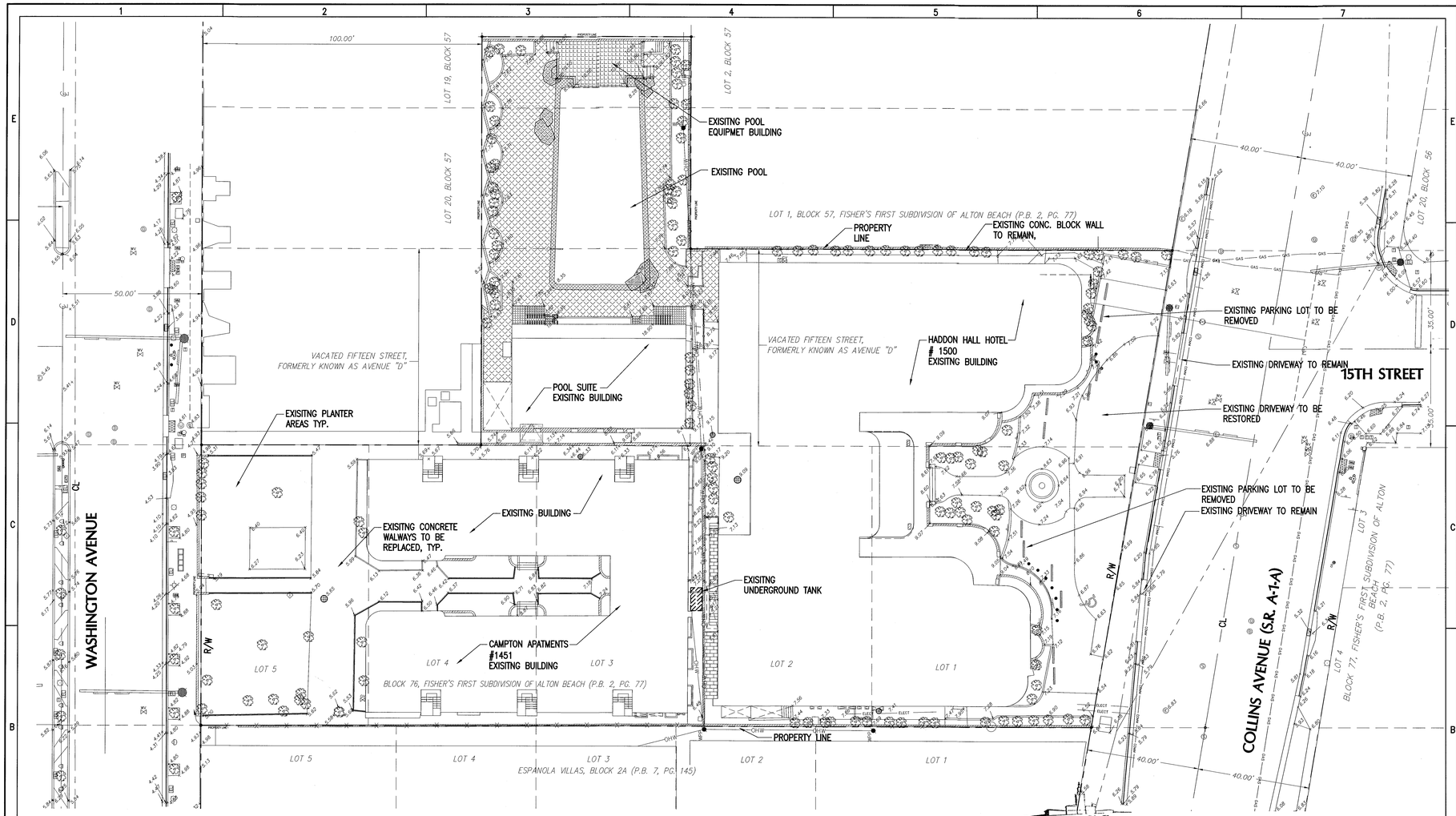

KNOW WHAT'S BELOW ALWAYS CALL 811 BEFORE YOU DIG

It's fast. It's free. It's the law.

www.callsunchine.com

PRIOR TO ANY EXCAVATIONS PLEASE CONTACT OUR OFFICE FOR LOCATIONS OF CITY UTILITIES

305-673-7080

CITY OF MIAMI BEACH

FOR LEGEND OF SYMBOLS REFER TO SHEETS PGD-3 AND WS-3.

10 0 20

SCALE IN FEET

1" = 20'

EXISISTING CONDITIONS SITE PLAN

SCALE: 1:=20'

MTCH

PRIVATE PROVIDER SERVICES, LLC

Construction Plans Review, Inspections, Testing & Certification

	REVIEWER INITIALS	DATE REVIEWED
BUILDING		
STRUCTURAL		
MECHANICAL		
ELECTRICAL		
PLUMBING		
SITE CIVIL		

APPROVED MIAMI BEACH FIRE DEPARTMENT

NOTE:
ALL SCALES INDICATED PERTAIN TO FULL SIZE DRAWINGS 22"x34"

HADDON HALL HOTEL

1500 COLLINS AVENUE
MIAMI BEACH, FL 33139

COASTAL SYSTEMS INTERNATIONAL, INC.
464 South Dixie Highway
Coral Gables, Florida 33146
Tel: 305-661-3655
Fax: 305-661-1914
www.CoastalSystemsInt.com
State of Florida EB #7087
Coastal, Environmental, Civil Engineering and Management

CONSULTANTS

ISSUE	DATE	DESCRIPTION
	1/27/14	PERMIT SET

PROJECT NO:	330300
DATUM:	NGVD
DRAWN BY:	OB
CHECKED BY:	AP

ENGINEER OF RECORD

DRAWING NOT VALID WITHOUT EMBOSSED SEAL

2/3/14

Andres Perez
66507

EXISTING CONDITIONS

GEN-3

3 OF 20 SHEETS

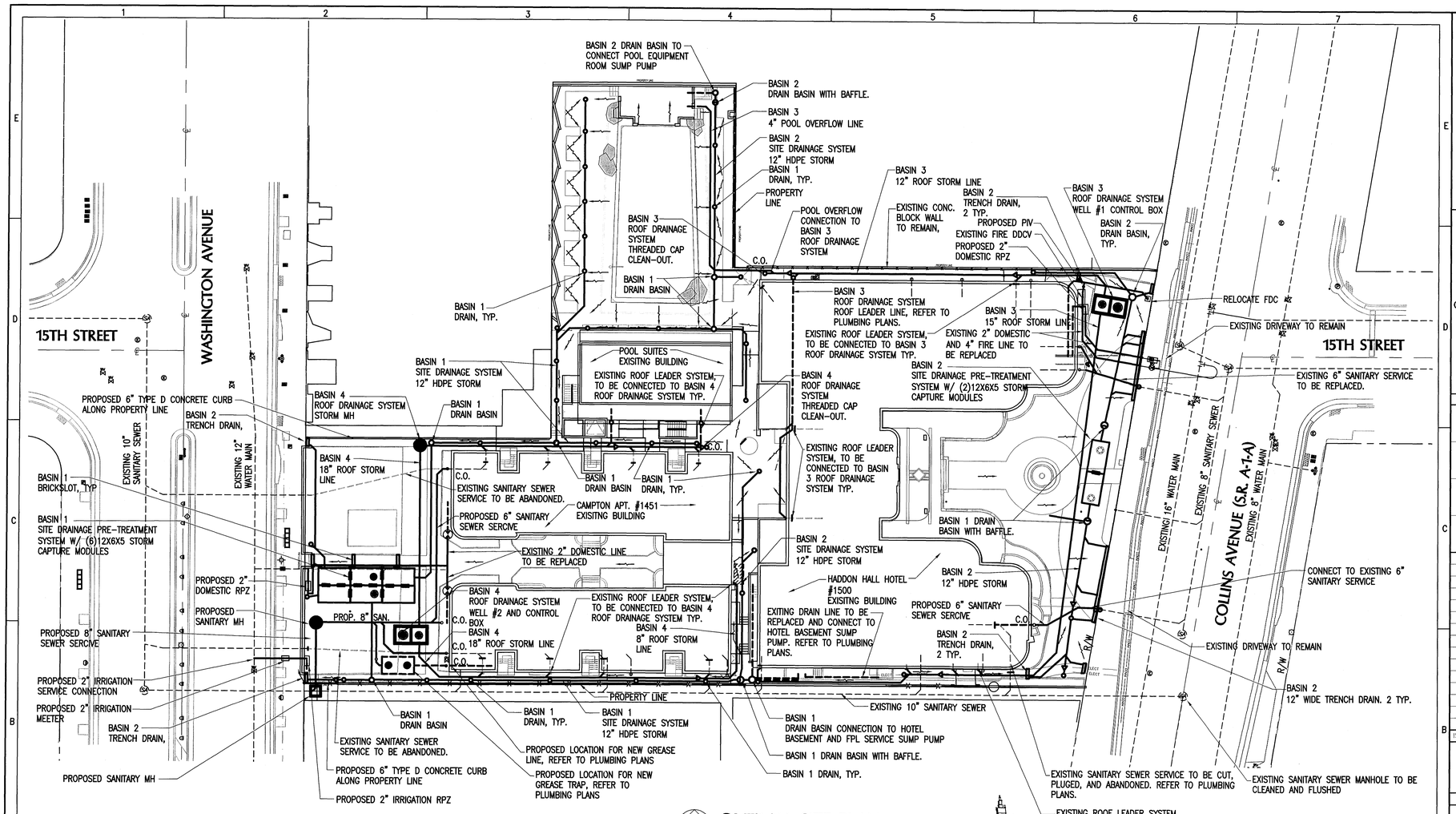

OVERALL SITE PLAN

SCALE: 1"=20'

811 KNOW WHAT'S BELOW ALWAYS CALL 811 BEFORE YOU DIG

It's fast. It's free. It's the law.

www.callsunchine.com

PRIOR TO ANY EXCAVATIONS PLEASE CONTACT OUR OFFICE FOR LOCATIONS OF CITY UTILITIES

305-673-7080

CITY OF MIAMI BEACH

FOR LEGEND OF SYMBOLS REFER TO SHEET PGD-3

10 0 20

SCALE IN FEET 1" = 20'

ROOF DRAINAGE NOTES:

1. ALL THE EXISTING ROOF LEADER PIPES MUST BE CUT AND CONNECTED TO THE PROPOSED ROOF DRAINAGE SYSTEM TO BE DISCHARGED INTO THE PROPOSED DRAINAGE WELLS.
2. LOCATIONS OF EXISTING LEADERS ARE APPROXIMATE AND CONTRACTOR TO VERIFY LOCATION.
3. ALL PROPOSED CONNECTIONS MUST BE PERFORMED AFTER DRAINAGE WELLS AND MAINS ARE INSTALLED.
4. CAP ALL THE CUT OPENING ON EXISTING LINES AFTER THE PROPOSED CONNECTIONS HAVE BEEN COMPLETED.

MTCI PRIVATE PROVIDER SERVICES, LLC

Construction Plans Review, Inspections, Testing & Consulting

	REVIEWER INITIALS	DATE REVIEWED
BUILDING		
STRUCTURAL		
MECHANICAL		
ELECTRICAL		
PLUMBING		
SITE CIVIL		

APPROVED MIAMI BEACH FIRE DEPARTMENT

NOTE:
ALL SCALES INDICATED PERTAIN TO FULL SIZE DRAWINGS 22"x34"

HADDON HALL HOTEL

1500 COLLINS AVENUE
MIAMI BEACH, FL 33139

COASTAL SYSTEMS INTERNATIONAL, INC.
464 South Dixie Highway
Coral Gables, Florida 33146
Tel: 305-661-3655
Fax: 305-661-1914
www.CoastalSystemsInt.com
State of Florida EB #7087
Coastal, Environmental, Civil Engineering and Management

CONSULTANTS

ISSUE	DATE	DESCRIPTION
	1/27/14	PERMIT SET

PROJECT NO: 330300
DATUM: NGVD
DRAWN BY: OB
CHECKED BY: AP

ENGINEER OF RECORD

DRAWING INVALID WITHOUT EMBOSSED SEAL

2/3/14

Andres Perez
66507

OVERALL SITE PLAN

GEN-4

4 OF 20 SHEETS

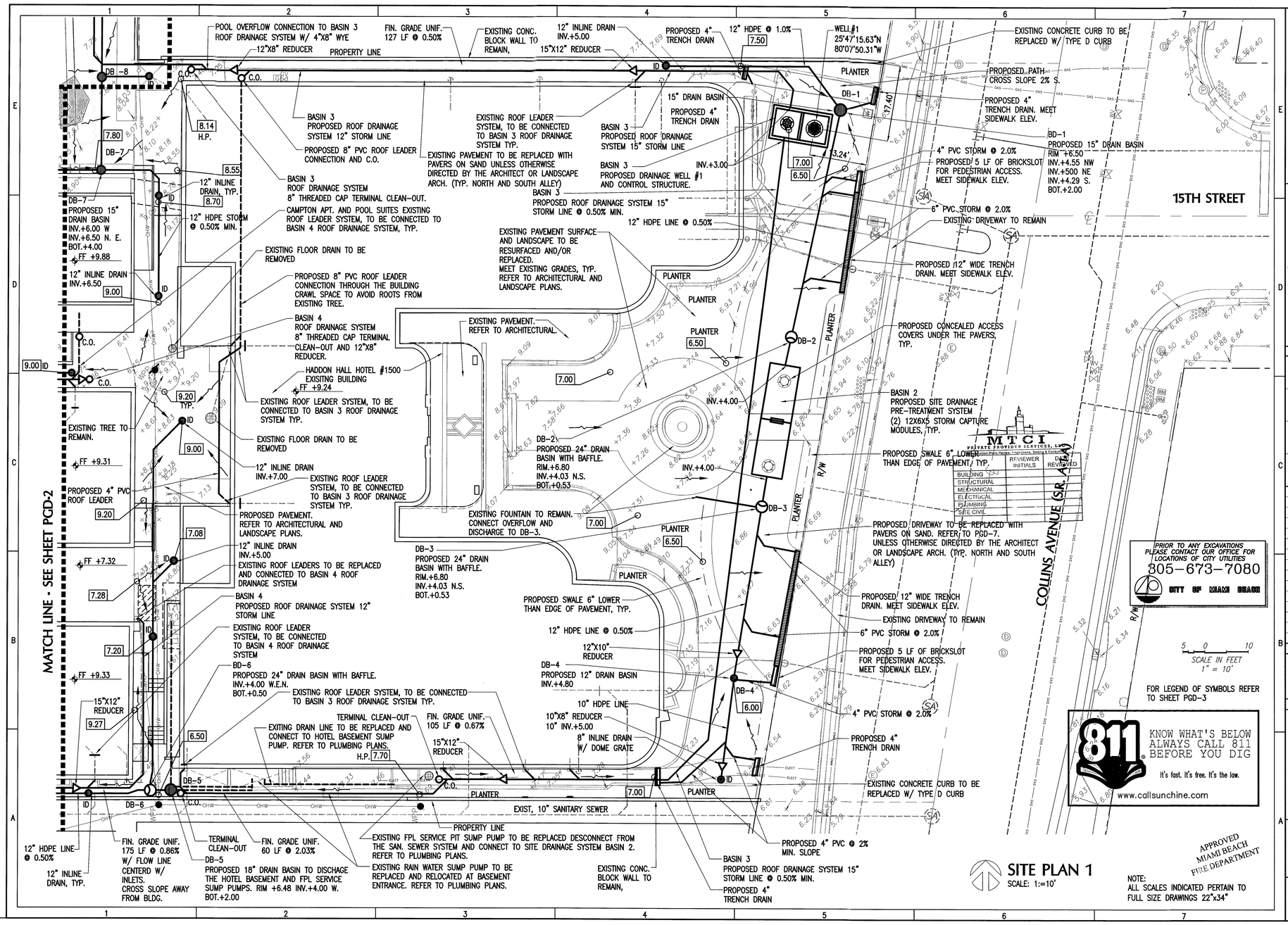

SITE PLAN 1
SCALE: 1:=10'

MTCI
PRIVATE PROVIDER SERVICES, LLC
Building Plans Review, Inspections, Testing & Consulting

	REVIEWER INITIALS	DATE REVIEWED
BUILDING		
STRUCTURAL		
MECHANICAL		
ELECTRICAL		
PLUMBING		
SITE CIVIL		

HADDON HALL HOTEL

1500 COLLINS AVENUE
MIAMI BEACH, FL 33139

COASTAL SYSTEMS INTERNATIONAL, INC.
464 South Dixie Highway
Coral Gables, Florida 33146
Tel: 305-661-3655
Fax: 305-661-1914
www.CoastalSystemsInt.com
State of Florida EB #7087
Coastal, Environmental, Civil Engineering and Management

CONSULTANTS

ISSUE	DATE	DESCRIPTION
	1/27/14	PERMIT SET

PROJECT NO: 330300
DATUM: NGVD
DRAWN BY: OB
CHECKED BY: AP

ENGINEER OF RECORD

DRAWING NOT VALID WITHOUT EMBOSSED SEAL
2/3/14
Andres Perez
66507

PAVING, GRADING and DRAINAGE

PGD-1

5 OF 20 SHEETS

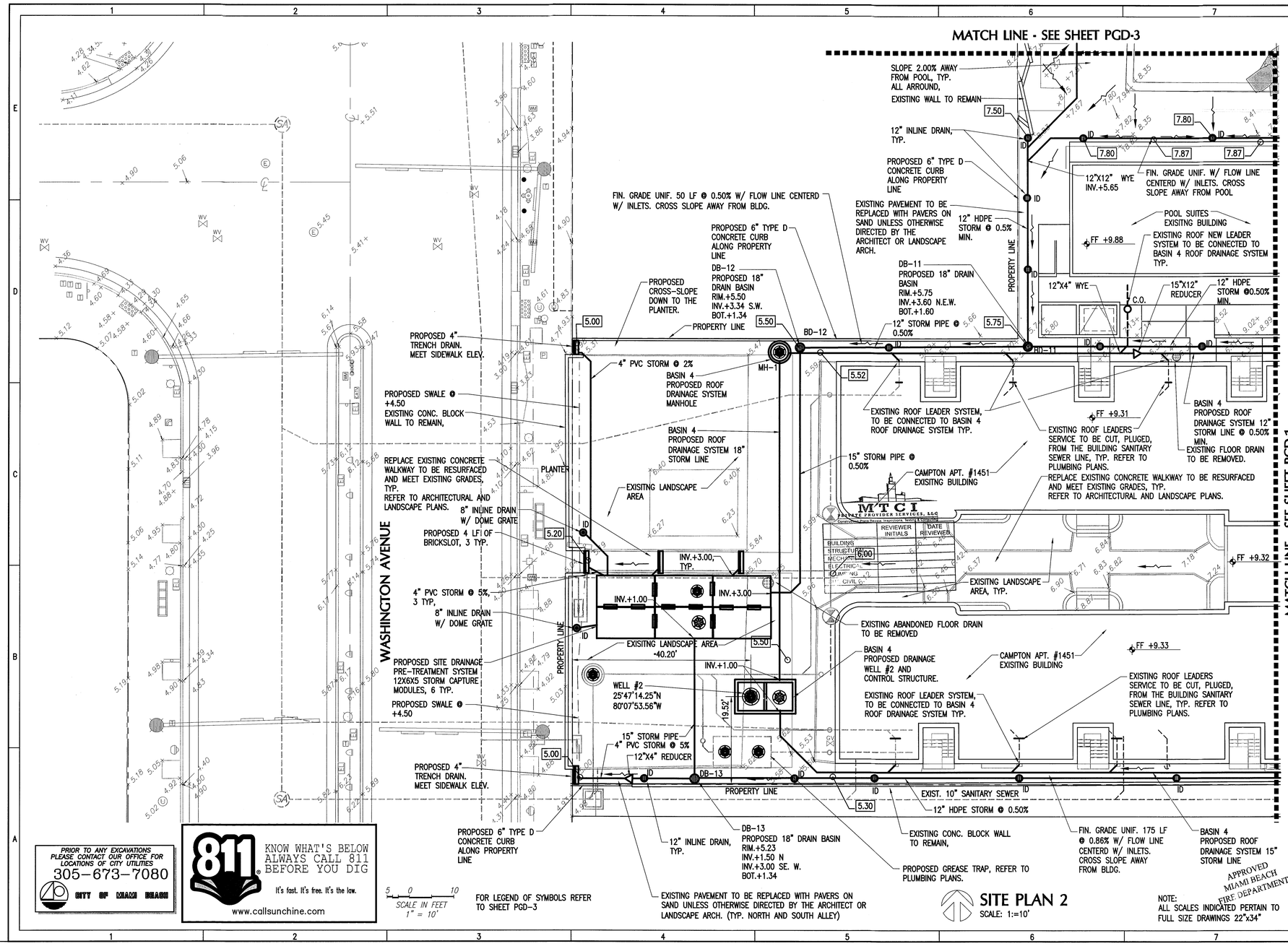

SITE PLAN 2
SCALE: 1:=10'

PRIOR TO ANY EXCAVATIONS PLEASE CONTACT OUR OFFICE FOR LOCATIONS OF CITY UTILITIES
305-673-7080
CITY OF MIAMI BEACH

811 KNOW WHAT'S BELOW ALWAYS CALL 811 BEFORE YOU DIG
It's fast. It's free. It's the law.
www.callsunchine.com

HADDON HALL HOTEL

1500 COLLINS AVENUE
MIAMI BEACH, FL 33139

COASTAL SYSTEMS INTERNATIONAL
COASTAL SYSTEMS INTERNATIONAL, INC.
464 South Dixie Highway,
Coral Gables, Florida 33146
Tel: 305-661-3655
Fax: 305-661-1913
www.CoastalSystemsInt.com
State of Florida EB #7087
Coastal, Environmental,
Civil Engineering and Management

CONSULTANTS

ISSUE	DATE	DESCRIPTION
	1/27/14	PERMIT SET

PROJECT NO: 330300
DATUM: NGVD
DRAWN BY: OB
CHECKED BY: AP

ENGINEER OF RECORD

DRAWINGS NOT VALID WITHOUT EMBOSSED SEAL
2/3/14
Andres Perez
66507

PAVING, GRADING and DRAINAGE

PGD-2

LEGEND

EXISTING		PROPOSED
	WATER METER	
	WATER VALVE	
WATER	WATER MAIN	WATER
FH	FIRE HYDRANT	N.A.
	FIRE/DOMESTIC BACKFLOW PREVENTOR	
N.A.	IRRIGATION VACUUM BREAKER	
SAN	SANITARY SEWER	N.A.
	SEWER MANHOLE	N.A.
	DRAINAGE FLOW	
x8.11	SPOT ELEVATION	8.00
	STORM MANHOLE	
N.A.	DRAINAGE WELL	
	CATCH BASIN	
N.A.	DRAIN BASIN	DB-1
N.A.	INLINE DRAIN	ID
OE	OVERHEAD ELECTRIC	N.A.
OT	OVERHEAD TELEPHONE	N.A.
	UTILITY POLE	N.A.
	TELEPHONE MANHOLE	N.A.
	F.P.L. MANHOLE	N.A.
FPL	ELECTRIC VAULT	N.A.
	GAS VALVE	N.A.
N.A.	GAS MAIN	
E	ELECTRIC BOX	N.A.
	TREE	
℄	CENTER LINE	℄

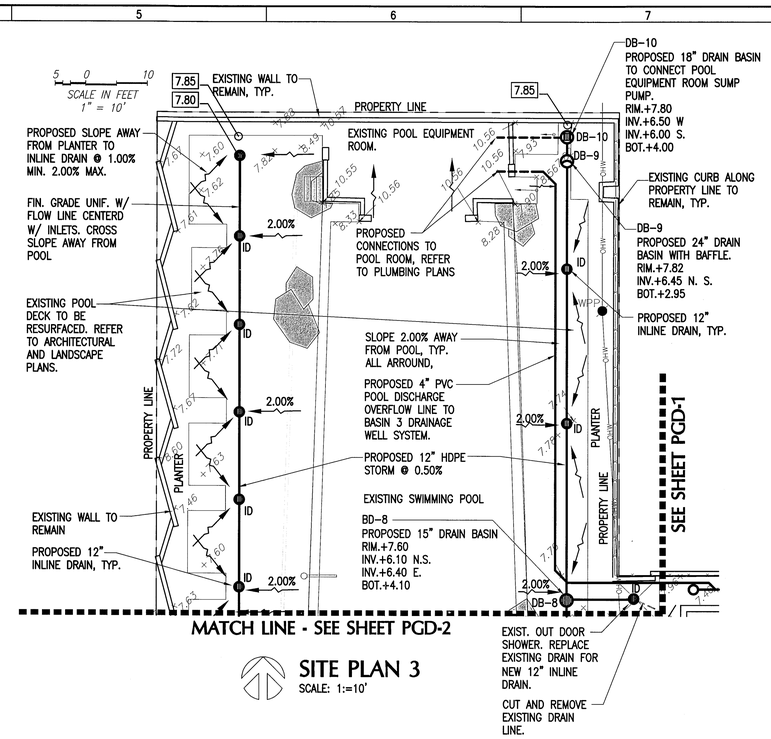

SITE PLAN 3

SCALE: 1:=10'

MTCI
PRIVATE PROVIDER SERVICES, LLC
Construction Plans Review, Inspections, Testing & Codes

	REVIEWER INITIALS	DATE REVIEWED
BUILDING		
STRUCTURAL		
MECHANICAL		
ELECTRICAL		
PLUMBING		
SITE CIVIL		

APPROVED
MIAMI BEACH
FIRE DEPARTMENT

NOTE:
ALL SCALES INDICATED PERTAIN TO FULL SIZE DRAWINGS 22"x34"

HADDON HALL HOTEL

1500 COLLINS AVENUE
MIAMI BEACH, FL 33139

COASTAL SYSTEMS INTERNATIONAL, INC.
464 South Dixie Highway
Coral Gables, Florida 33146
Tel: 305-661-3655
Fax: 305-661-1914
www.CoastalSystemsInt.com
State of Florida EB #7087
Coastal, Environmental, Civil Engineering and Management

CONSULTANTS

ISSUE	DATE	DESCRIPTION
	1/27/14	PERMIT SET

PROJECT NO: 330300
DATUM: NGVD
DRAWN BY: OB
CHECKED BY: AP

ENGINEER OF RECORD

DRAWINGS NOT VALID WITHOUT EMBOSSED SEAL
1/27/14
Andres Perez
66507

PAVING, GRADING and DRAINAGE

PGD-3

7 OF 20 SHEETS

NOTES

1. ALL CONCRETE SHALL BE MINIMUM 4000 PSI, COMPRESSIVE STRENGTH. PRECAST CONCRETE MANHOLES SHALL CONFORM TO ASTM C478, SHALL BE TYPE II ACID RESISTANT CEMENT AND SHALL MAINTAIN A MINIMUM COMPRESSIVE STRENGTH OF 4000 P.S.I. IN 28 DAYS.

2. ALL REINFORCING BARS SHALL BE ASTM A615–87 GRADE 60, ALL COVER SHALL BE 3" MIN.

3. SHOP DRAWINGS REQUIRED FOR ALL STRUCTURES, FITTINGS, AND COVERS.

4. CONTRACTOR PLEASE FIELD VERIFY FOR ANY EXISTING RAINWATER LEADERS FROM BUILDING PROVIDE SIZE & INVERT. PRIOR TO SHOP DRAWINGS SUBMITALS.

DRAINAGE WELL NOTES

1. DRAINAGE WELL SHALL BE DRILLED TO A TOTAL DEPTH TO DISCHARGE RUNOFF TO AN AQUIFER HAVING A MINIMUM OF 10,000 mg/Liter OF TOTAL DISSOLVED SOLIDS (TDS).

2. WELL SHALL HAVE AN UPPER CASING OF A MINIMUM OF 24 INCHES IN DIAMETER, WITH DRIVE SHOE, WHICH SHALL BE DRIVEN TO A FIRM SEAT.

3. WELL SHALL BE AS PLUMB AND TRUE TO LINE AS GOOD WORKMANSHIP WILL PROVIDE.

4. COMPLETED WELL SHALL BE THOUROUGHLY AGITATED AND DEVELOPED.

5. CONTRACTOR TO PERFORM STEP DRAW DOWN TEST OR INJECTION TEST TO DEMONSTRATE THE WELL CAPACITY. (750 GPM / FT. HEAD).

6. THE CONTRACTOR SHALL PROVIDE ALL NECESSARY EQUIPMENT FOR CONDUCTING THE WELL TEST. THE CONTRACTOR SHALL PROVIDE A MINIMUM OF 48 HOURS NOTICE TO THE OWNER AND THE ENGINEER PRIOR TO STARTING WORK.

7. IT SHALL BE THE CONTRACTORS RESPONSIBILITY TO SECURE THE NECESSARY D.E.P. WELL DRILLING PERMITS AND COMPLY WITH ALL THE PROVISIONS THEREOF.

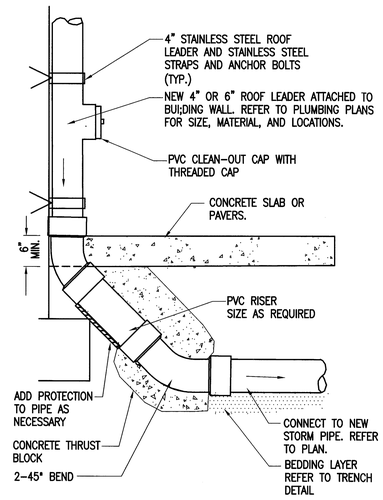

TYPICAL WALL MOUNTED

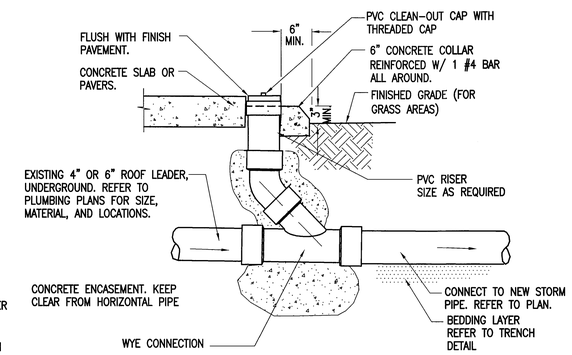

TYPICAL UNDERGROUND

ROOF LEADER CONNECTION AND CLEAN-OUT DETAIL

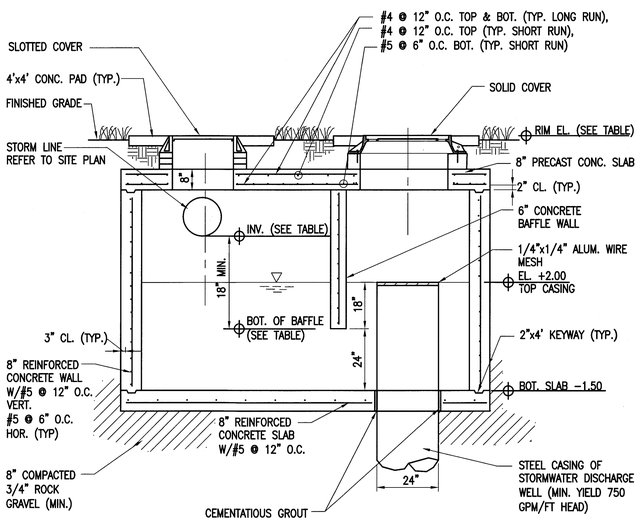

LONGITUDINAL SECTION

RETENTION BOX ELEVATIONS TABLE

STRUCTURE	INVERTS	BOT. OF BAFFLE	COVER SLAB	RIM/GRATE
WELL #1	+1.50 N +1.50 S	-0.50	+6.00	+7.00
WELL #2	+1.50 N +1.50 S	-0.50	+4.50	+5.50

MTCI
PRIVATE PROVIDER SERVICES, LLC
Continuous Plans Review, Inspections, Testing & Contracting

	REVIEWER INITIALS	DATE REVIEWED
BUILDING		
STRUCTURAL		
MECHANICAL		
ELECTRICAL		
PLUMBING		
SITE CIVIL		

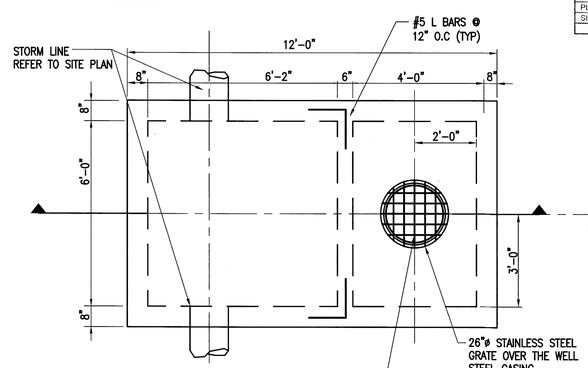

PLAN VIEW

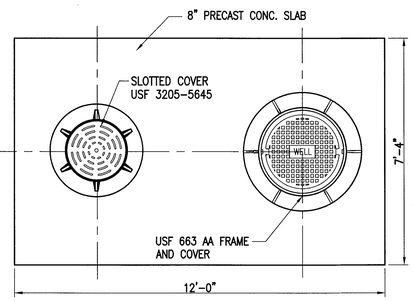

CONCRETE COVER SLAB PLAN VIEW

APPROVED MIAMI BEACH FIRE DEPARTMENT

NOTE:
ALL SCALES INDICATED PERTAIN TO FULL SIZE DRAWINGS 22"x34"

DRAIMAGE WELL BOX AND DRAINAGE DISCHARGE WELL DETAIL

HADDON HALL HOTEL

1500 COLLINS AVENUE
MIAMI BEACH, FL 33139

COASTAL SYSTEMS INTERNATIONAL, INC.
464 South Dixie Highway
Coral Gables, Florida 33146
Tel: 305-661-3655
Fax: 305-661-1914
www.CoastalSystemsInt.com
State of Florida EB #7037
Coastal, Environmental, Civil Engineering and Management

CONSULTANTS

ISSUE	DATE	DESCRIPTION
	1/27/14	PERMIT SET

PROJECT NO: 330300
DATUM: NGVD
DRAWN BY: OB
CHECKED BY: AP

ENGINEER OF RECORD

DRAWINGS NOT VALID WITHOUT EMBOSSED SEAL
2/7/14
Andres Perez
66507

PAVING AND DRAINAGE DETAILS 1

PGD-4

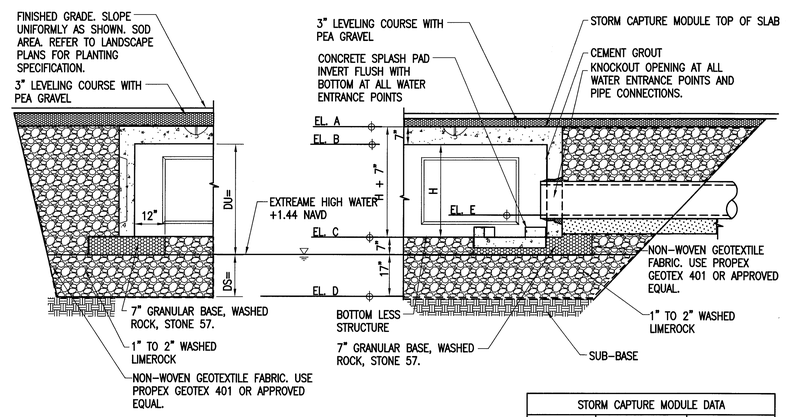

TYPICAL DRY RETENTION SYSTEM WITH STORM CAPTURE MODULES

STORM CAPTURE MODULE DATA		
ELEVATIONS	BASIN 1	BASIN 2
EL. COVER	+5.50 MIN. SEE SITE PLAN	+6.50 MIN. SEE SITE PLAN
EL. A	+5.28	+6.08
EL. B	+4.70	+5.50
EL. C	−0.30	+0.50
EL. D	−4.50	−3.50
EL. E	SEE SITE PLAN	SEE SITE PLAN
H	5 FT	5 FT

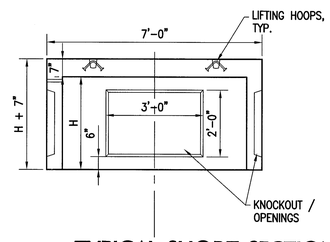

TYPICAL SHORT SECTION

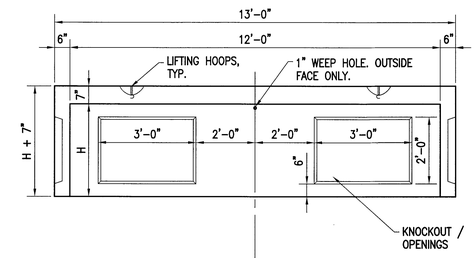

TYPICAL LONG SECTION

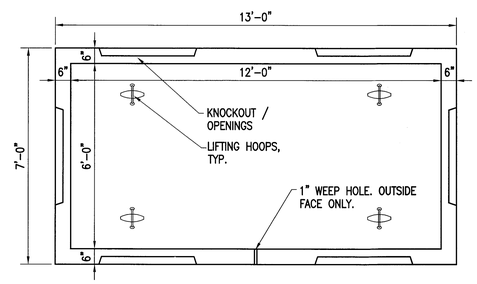

TYPICAL MODULE PLAN

MANUFACTURE DESIGN NOTES

1. DESIGN LOADINGS:
   A. AASHTO HS-20-44 W/ IMPACT.
   B. DEPTH OF OVERBURDEN = 6" – 5'-0".
   C. ASSUMED WATER TABLE = BELOW BOTTOM
   D. EQUIVALENT FLUID PRESSURE = 40 PCF.
   E. LATERAL LIVE LOAD SURCHARGE = 80 PSF.
2. CONCRETE 28 DAY COMPRESSIVE STRENGTH SHALL BE 6,000 PSI.
3. STEEL REINFORCEMENT: REBAR, ASTM A-615, GRADE 60.
4. CEMENT: ASTM C-150 SPECIFICATION.
5. STORM CAPTURE MODULE TYPE = INFILTRATION.
6. REQUIRED SUBGRADE DEPTH = 7" CRUSHED AGGREGATE.
7. REQUIRED NATIVE ALLOWABLE BEARING PRESSURE = 2,500 PSI.
8. REFERENCE STANDARDS
   A. ASTM C 890
   B. ASTM C 913
10. LESS THAN 6" OR GREATER THAN 5' OF FILL REQUIRES CUSTOM STRUCTURAL DESIGN AND MAY REQUIRE THICKER SUBGRADE

PRECAST STORM CAPTURE MODULE BY OLDCASTLE PRECAST. PRECAST DETAILS SHOWN ARE FOR FOR INFORMATION PURPOSE ONLY. CONTRACTOR SHALL SUBMIT SHOP DRAWINGS FOR ENGINEER'S APPROVAL.

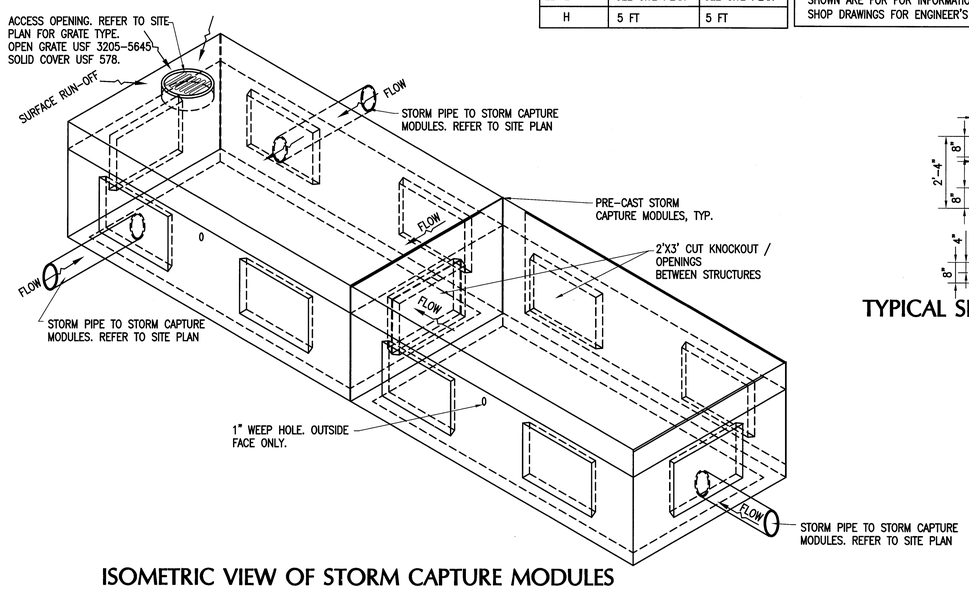

ISOMETRIC VIEW OF STORM CAPTURE MODULES

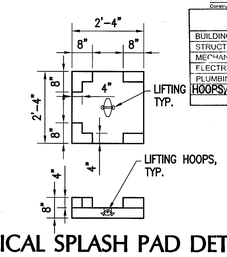

TYPICAL SPLASH PAD DETAIL

MTCI
PRIVATE PROVIDER SERVICES, LLC
Construction Plans Review, Inspections, Testing & Consulting

	REVIEWER INITIALS	DATE REVIEWED
BUILDING		
STRUCTURAL		
MECHANICAL		
ELECTRICAL		
PLUMBING		
CIVIL		

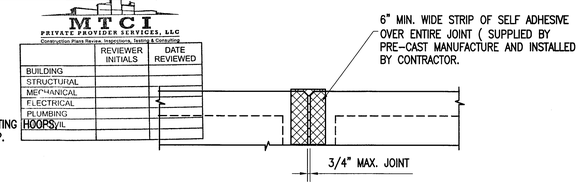

MODULE JOINT DETAIL

MANUFACTURE INSTALLATION NOTES:

THE STORM CAPTURE™ MODULE SYSTEM IS TO BE INSTALLED IN ACCORDANCE WITH ASTM C891-90, INSTALLATION OF UNDERGROUND PRECAST UTILITY STRUCTURES. PROJECT PLAN AND SPECIFICATIONS MUST BE FOLLOWED ALONG WITH ANY APPLICABLE REGULATIONS.

1. PLAN LINE, GRADE AND ELEVATIONS MUST BE FOLLOWED.
2. WHERE SPECIFIED A NON – WOVEN GEOTEXTILE THAT MEETS AASHTO M288 CLASS 2 MUST BE USED.
3. ALL SUBGRADE MATERIALS IF SPECIFIED, MUST BE CLEAN, GRANULAR (SIZE 5,56,OR 57) COMPACTED OR ROLLED TO ACHIEVE 95% STANDARD PROCTOR DENSITY.
4. DESIGNATED EMBEDDED LIFTERS MUST BE USED. USE PROPER RIGGING TO ASSURE ALL LIFTERS ARE EQUALLY ENGAGED WITH A MINIMUM 60 DEGREE ANGLE ON SLINGS.
5. MODULES MUST BE PLACED AS CLOSE TOGETHER AS POSSIBLE, BUT GAPS SHALL NOT BE GREATER THAN 3/4". ALL EXTERIOR SYSTEM JOINTS SHALL BE COVERED WITH A 6' JOINT WRAP, PER APPROVAL OF ENGINEER OR OLDCASTLE
6. AUTHORIZATION SHOULD BE GIVEN BY THE PROJECT ENGINEER OR DESIGNATED PERSON PRIOR TO PLACEMENT ON BACKFILL FOR THE SYSTEM. CARE SHOULD BE TAKEN DURING PLACEMENT OF BACKFILL NOT TO DISPLACE MODULES OR JOINT WRAP. BACKFILL SHALL BE COMPACTED TO 95% STANDARD PROCTOR DENSITY OR AS SPECIFIED.
7. CONSTRUCTION EQUIPMENT EXCEEDING DESIGN LOADING SHALL NOT BE ALLOWED ON STRUCTURE.

NOTE:
ALL SCALES INDICATED PERTAIN TO FULL SIZE DRAWINGS 22"X34"

APPROVED MIAMI BEACH FIRE DEPARTMENT

HADDON HALL HOTEL

1500 COLLINS AVENUE
MIAMI BEACH, FL 33139

COASTAL SYSTEMS INTERNATIONAL, INC.
464 South Dixie Highway
Coral Gables, Florida 33146
Tel: 305-661-3655
Fax: 305-661-1914
www.CoastalSystemsInt.com
State of Florida EB #7087
Coastal, Environmental, Civil Engineering and Management

CONSULTANTS

ISSUE	DATE	DESCRIPTION
	1/27/14	PERMIT SET

PROJECT NO: 330300
DATUM: NGVD
DRAWN BY: OB
CHECKED BY: AP

ENGINEER OF RECORD

DRAWINGS NOT VALID WITHOUT EMBOSSED SEAL
2/3/14
Andres Perez
66507

PAVING AND DRAINAGE DETAILS 2

PGD-5

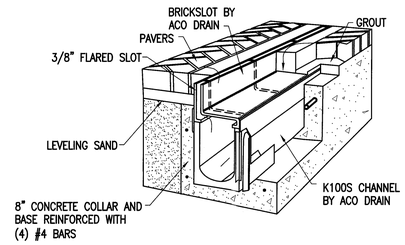

BRICKSLOT DETAIL

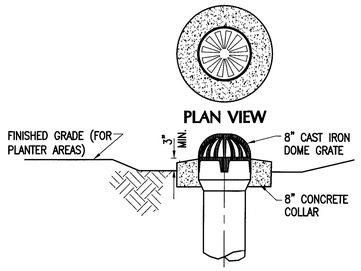

8" DOME GRATE DETAIL

NOTE
PROVIDE SHOP DRAWINGS OF STRUCTURES.

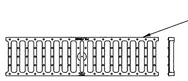

USE CAST IRON GRATE FOR VEHICULAR PATH

CAST IRON GRATES

NOTE
PROVIDE SHOP DRAWINGS OF STRUCTURES.

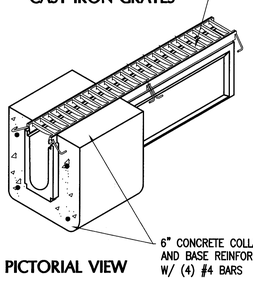

PICTORIAL VIEW

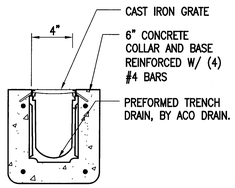

TYP. SECTION SHEET FLOW

TYPICAL 4" TRENCH DRAIN DETAIL

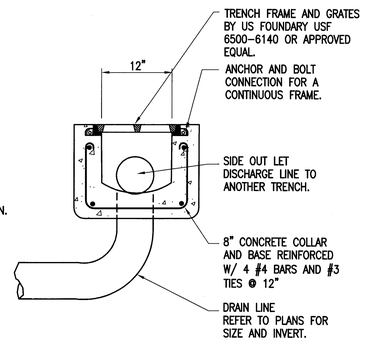

TYPICAL TRENCH DRAIN DETAIL

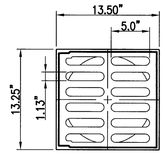

STANDARD (H-20) RATED DRAINAREA = 62.7 SQ. INCH

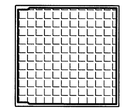

SOLID (H-20) RATED, REFER TO SITE PLAN.

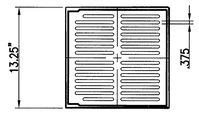

PEDESTRIAN (H-10) RATED DRAINAREA = 51.0 SQ. INCH

12" CAST IRON GRATE

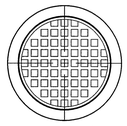

STANDARD (H-20) RATED DRAINAREA = 98.7 SQ. INCH

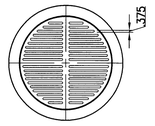

PEDESTRIAN GRATE (H-10) RATED DRAINAGE AREA = 87.6 Sq. INCHES

18" DUCTILE IRON GRATE

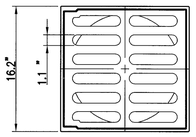

STANDARD (H-20) RATED DRAINAREA = 92.5 SQ. INCH

15" CAST IRON GRATE

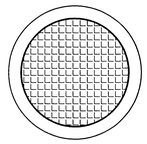

SOLID GRATE

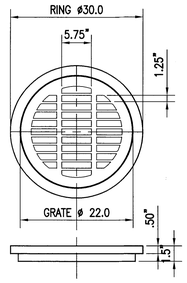

STANDARD (H-20) RATED DRAINAREA = 161.4 SQ. INCH

24" DUCTILE IRON

TYPICAL GRATE DETAILS (NYLOPLAST)

MTCI
PRIVATE PROVIDER SERVICES, LLC
Construction Plans Review, Inspections, Testing & Consulting

	REVIEWER INITIALS	DATE REVIEWED
BUILDING		
STRUCTURAL		
MECHANICAL		
ELECTRICAL		
PLUMBING		
SITE CIVIL		

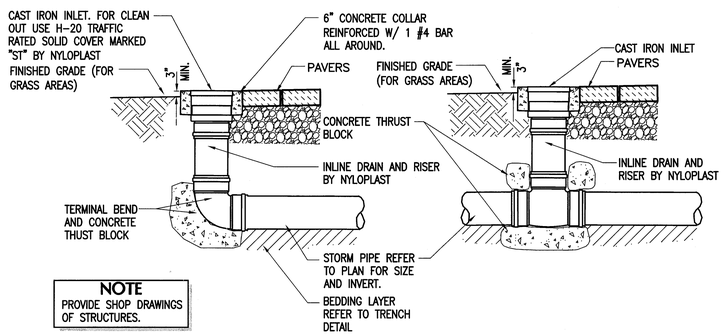

NOTE
PROVIDE SHOP DRAWINGS OF STRUCTURES.

TYPICAL STORM 12" INLINE DRAIN DETAIL

NOTE
1. PROVIDE SHOP DRAWINGS OF STRUCTURES.

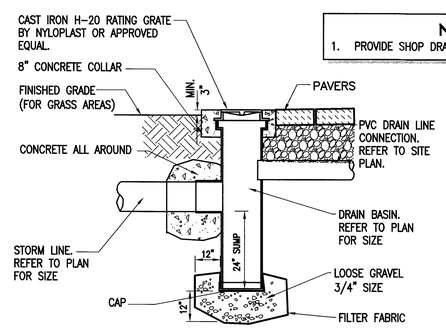

TYPICAL DRAIN BASIN (NYLOPLAST) INSTALLATION DETAIL

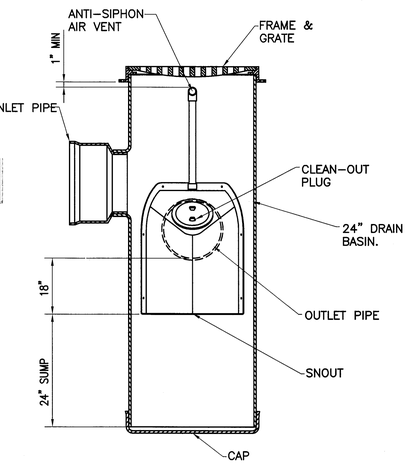

24" SNOUT STRUCTURE

DRAIN BASIN BAFFLE DETAIL

APPROVED MIAMI BEACH FIRE DEPARTMENT

NOTE:
ALL SCALES INDICATED PERTAIN TO FULL SIZE DRAWINGS 22"x34"

HADDON HALL HOTEL

1500 COLLINS AVENUE
MIAMI BEACH, FL 33139

COASTAL SYSTEMS INTERNATIONAL, INC.
464 South Dixie Highway
Coral Gables, Florida 33146
Tel: 305-661-3655
Fax: 305-661-1994
www.CoastalSystemsInt.com
State of Florida EB #7087
Coastal, Environmental,
Civil Engineering and Management

CONSULTANTS

ISSUE	DATE	DESCRIPTION
	1/27/14	PERMIT SET

PROJECT NO: 330300
DATUM: NGVD
DRAWN BY: OB
CHECKED BY: AP

ENGINEER OF RECORD

DRAWING NOT VALID WITHOUT EMBOSSED SEAL
2/3/14
Andres Perez
66507

PAVING AND DRAINAGE DETAILS 3

PGD-6

10 OF 20 SHEETS

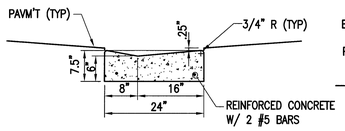

VALLEY GUTTER / DROPPED CURB

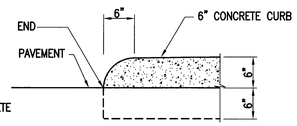

END CURB DETAIL

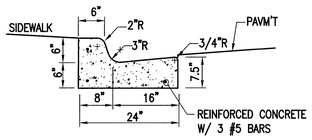

CURB AND GUTTER TYPE F

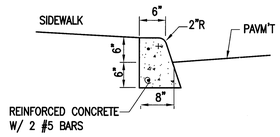

CONCRETE CURB TYPE D

CONCRETE CURB DETAILS

TABLE OF SIDEWALK JOINTS	
TYPE	LOCATION
'A'	P.C. AND PT. OF CURVES JUNCTION OF EXISTING AND NEW
'B'	5'-0" CENTER TO CENTER ON SIDEWALKS
'C'	WHERE SIDEWALK ABUTS TO CONCRETE CURBS, DRIVEWAYS, AND SIMILAR STRUCTURES

NOTES

CROSS-SLOPE:
0.02 STANDARD
0.01 MIN.
0.04 MAX.
COLOR:
MIAMI BEACH RED AND COLOR SHALL BE INTEGRATED INTO CONCRETE MIX.

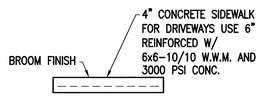

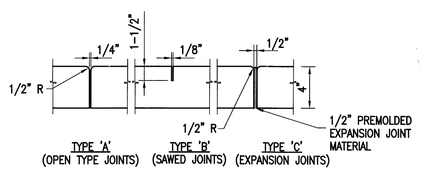

CONCRETE SIDEWALK DETAILS

ACCESS OPENING
SOLID COVER USF 578 'STORM'

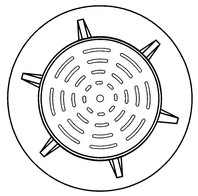

ACCESS OPENING
OPEN GRATE USF 3205-5645

ACCESS COVER DETAILS

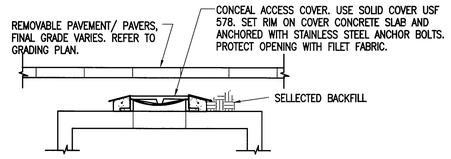

CONCEALED ACCESS COVER DETAIL

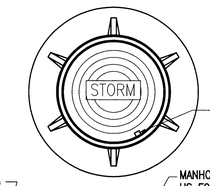

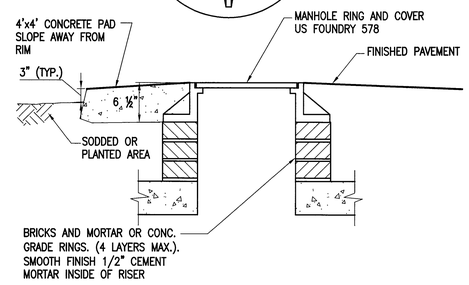

MTCI
PRIVATE PROVIDER SERVICES, LLC
Construction Plans Review, Inspections, Testing & Contracting

	REVIEWER INITIALS	DATE REVIEWED
BUILDING		
STRUCTURAL		
MECHANICAL		
ELECTRICAL		
PLUMBING		
SITE CIVIL		

NOTES

1. COLLAR IS REQUIRED ONLY WHEN MANHOLE IS OUT OF PAVEMENT.
2. MINIMUM WEIGHTS: COVER – 170 LBS., FRAME – 200 LBS.
3. FRAME AND COVER SHALL BE U.S. FOUNDRY NO. 578 OR EQUAL
4. MANHOLE COVER SHALL HAVE THE WORDS "STORM" AND "WELL" CAST IN METAL.

DRAINAGE STRUCTURE DETAIL & COVER INSTALLATION DETAIL

DRAINAGE PIPE NOTES

1. BEDDING MATERIAL SHALL BE HAND PLACED IN 6" LIFTS AND SHALL CONSIST OF IN-SITU GRANULAR MATERIAL OR WASHED AND GRADED LIMEROCK 3/8"-7/8" SIZING. UNSUITABLE IN-SITE MATERIALS SUCH AS MUCK, DEBRIS AND LARGER
2. ROCK SHALL BE REMOVED.
   THE PIPE SHALL BE FULLY SUPPORTED FOR ITS ENTIRE
3. LENGTH WITH APPROPRIATE COMPACTION UNDER THE PIPE
4. HAUNCHES.
   THE PIPE SHALL BE PLACED IN A DRY TRENCH.
   BACKFILL SHALL BE DONE WITH APPROVED MATERIAL, CLEAN AND FREE OF ROCKS, MUCK AND OTHER DELETERIOUS
5. MATTER AND COMPACTED BENEATH THE HAUNCHES OF THE PIPE USING MECHANICAL TAMPERS TO 100% MAXIMUM DENSITY AS DETERMINED BY AASHTO T-99.
6. A. BACKFILL TO BE COMPACTED ALONG THE SIDES OF THE PIPE AND TO A POINT ONE FOOT ABOVE THE TOP OF THE PIPE TO 100% MAXIMUM DENSITY AS DETERMINED BY AASHTO T-99.
   B. WHERE PAVEMENT IS TO BE CONSTRUCTED OVER THE PIPE THE REMAINING BACKFILL SHALL BE COMPACTED IN 6 INCH LAYERS AND COMPACTED TO 95% MAXIMUM DENSITY AS DETERMINED BY AASHTO T-180.
   WHERE "NO" PAVEMENT IS TO BE CONSTRUCTED OVER THE PIPE THE REMAINING BACKFILL SHALL BE COMPACTED IN 6 INCH LAYERS TO A DENSITY 90% MAXIMUM DENSITY AS DETERMINED BY AASHTO T-180.
7. CONTRACTOR SHALL COMPLY WITH ALL STATE AND LOCAL TRENCH SAFETY REGULATIONS.

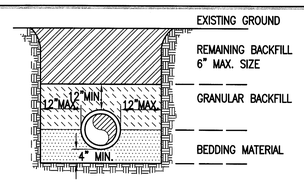

TYPICAL TRENCH DETAIL

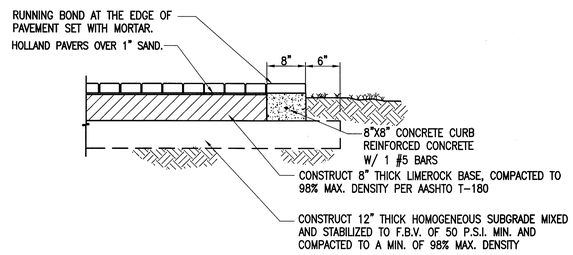

TYPICAL DRIVEWAY PAVING DETAIL

APPROVED
MIAMI BEACH
FIRE DEPARTMENT

NOTE:
ALL SCALES INDICATED PERTAIN TO FULL SIZE DRAWINGS 22"x34"

HADDON HALL HOTEL

1500 COLLINS AVENUE
MIAMI BEACH, FL 33139

COASTAL SYSTEMS INTERNATIONAL, INC.
464 South Dixie Highway
Coral Gables, Florida 33146
Tel: 305-661-3655
Fax: 305-661-1914
www.CoastalSystemsInt.com
State of Florida EB #7087
Coastal, Environmental,
Civil Engineering and Management

CONSULTANTS

ISSUE	DATE	DESCRIPTION
	1/27/14	PERMIT SET

PROJECT NO: 330300
DATUM: NGVD
DRAWN BY: OB
CHECKED BY: AP

ENGINEER OF RECORD

DRAWING WITHOUT EMBOSSED SEAL
2/3/14
Andres Perez
66507

PAVING AND DRAINAGE DETAILS 4

PGD-7

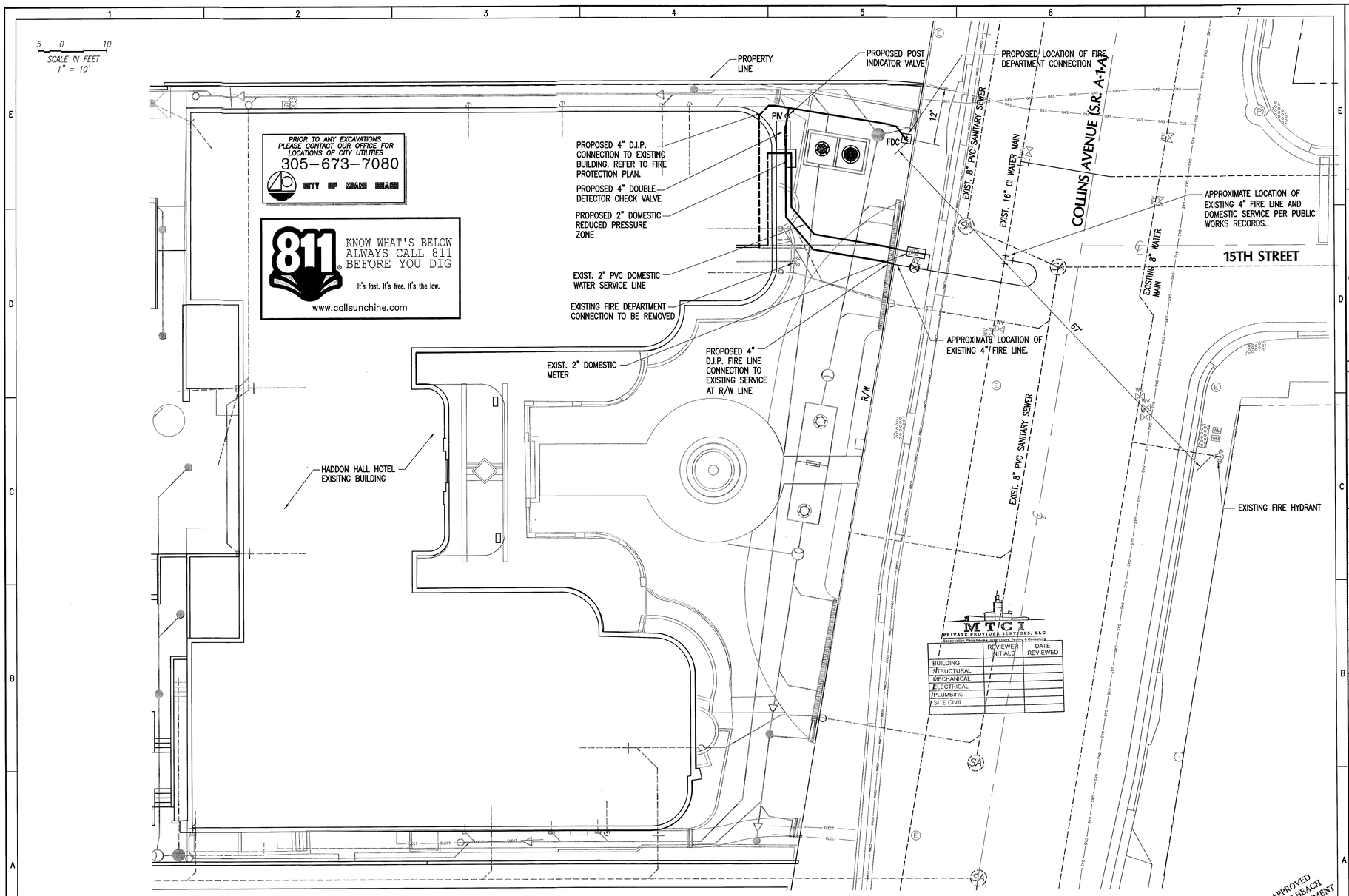

FOR LEGEND OF SYMBOLS REFER TO SHEET WS-2

HADDON HOTEL SITE PLAN 1

SCALE: 1:=10'

APPROVED MIAMI BEACH FIRE DEPARTMENT

NOTE:
ALL SCALES INDICATED PERTAIN TO FULL SIZE DRAWINGS 22"x34"

HADDON HALL HOTEL

1500 COLLINS AVENUE
MIAMI BEACH, FL 33139

COASTAL SYSTEMS INTERNATIONAL, INC.
464 South Dixie Highway
Coral Gables, Florida 33146
Tel: 305-661-3655
Fax: 305-661-1914
www.CoastalSystemsInt.com
State of Florida EB #7087
Coastal, Environmental,
Civil Engineering and Management

CONSULTANTS

ISSUE	DATE	DESCRIPTION

PROJECT NO: 330300
DATUM: NGVD
DRAWN BY: OB
CHECKED BY: AP

ENGINEER OF RECORD

DRAWING VALID WITHOUT EMBOSSED SEAL
2/3/14
Andres Perez
66507

WATER SERVICE SITE PLAN 1

WS-1

12 OF 20 SHEETS

5 0 10
SCALE IN FEET
1" = 10'

PRIOR TO ANY EXCAVATIONS PLEASE CONTACT OUR OFFICE FOR LOCATIONS OF CITY UTILITIES
305-673-7080
CITY OF MIAMI BEACH

811 KNOW WHAT'S BELOW ALWAYS CALL 811 BEFORE YOU DIG
It's fast. It's free. It's the law.
www.callsunchine.com

LEGEND

EXISTING		PROPOSED
	WATER METER	
	WATER VALVE	
WATER	WATER MAIN	WATER
FH	FIRE HYDRANT	FH
N.A.	FIRE/DOMESTIC BACKFLOW PREVENTOR	
N.A.	IRRIGATION VACUUM BREAKER	
SAN.	SANITARY SEWER	
SA	SEWER MANHOLE	
	DRAINAGE FLOW	
X8.11	SPOT ELEVATION	8.00
SD	STORM MANHOLE	
N.A.	DRAINAGE WELL	
	CATCH BASIN	
N.A.	DRAIN BASIN	

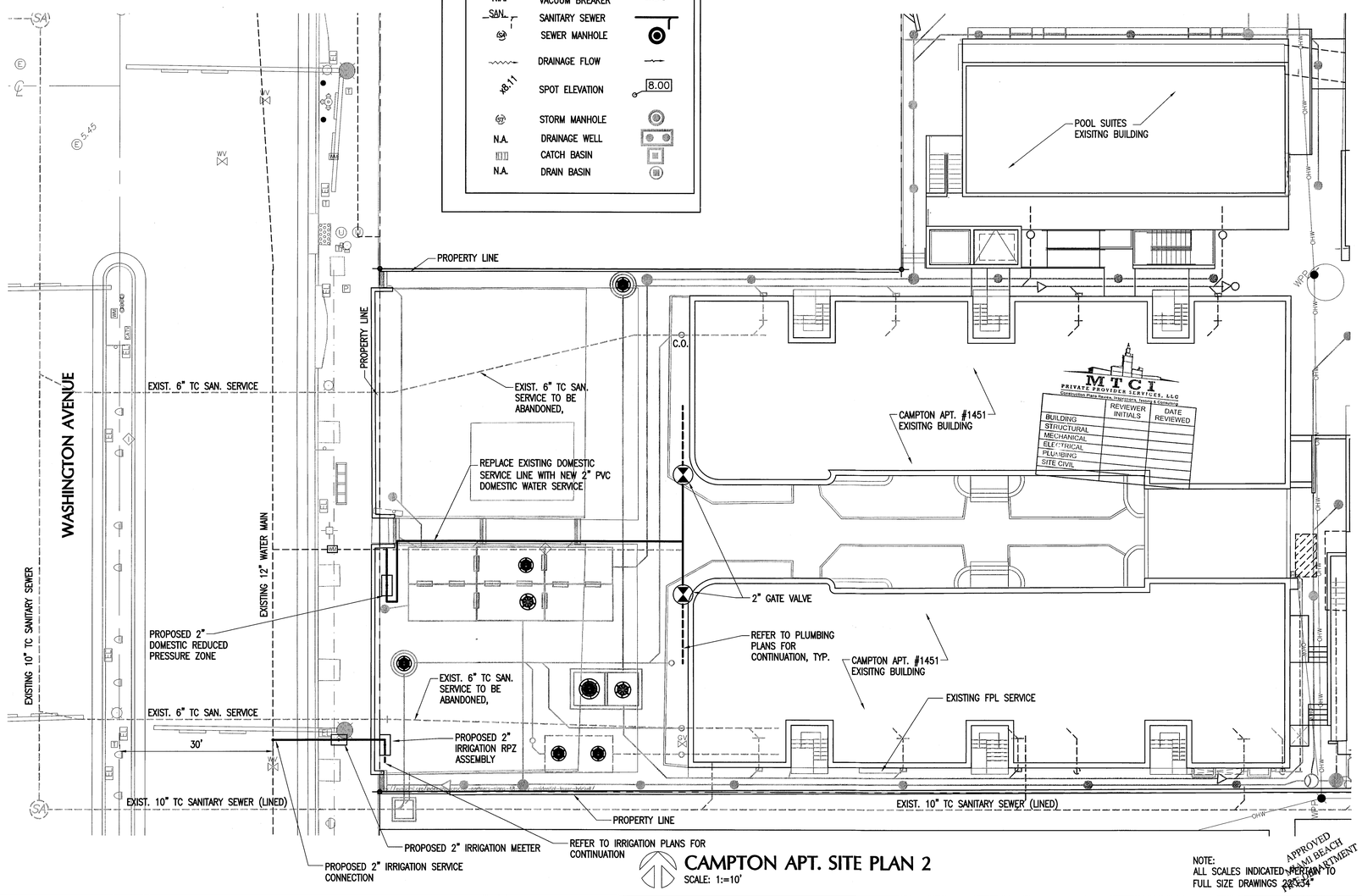

CAMPTON APT. SITE PLAN 2

SCALE: 1:=10'

NOTE:
ALL SCALES INDICATED REFER TO FULL SIZE DRAWINGS 22"X34"

APPROVED MIAMI BEACH PERMIT DEPARTMENT FAX 34"

HADDON HALL HOTEL

1500 COLLINS AVENUE
MIAMI BEACH, FL 33139

COASTAL SYSTEMS INTERNATIONAL, INC.
464 South Dixie Highway
Coral Gables, Florida 33146
Tel: 305-661-3655
Fax: 305-661-1914
www.CoastalSystemsInt.com
State of Florida EB #7087
Coastal, Environmental, Civil Engineering and Management

CONSULTANTS

ISSUE	DATE	DESCRIPTION

PROJECT NO: 330300
DATUM: NGVD
DRAWN BY: OB
CHECKED BY: AP

ENGINEER OF RECORD

DRAWING VOID WITHOUT EMBOSSED SEAL
2/3/14
Andres Perez
66507

WATER SERVICE SITE PLAN 2

WS-2

13 OF 20 SHEETS

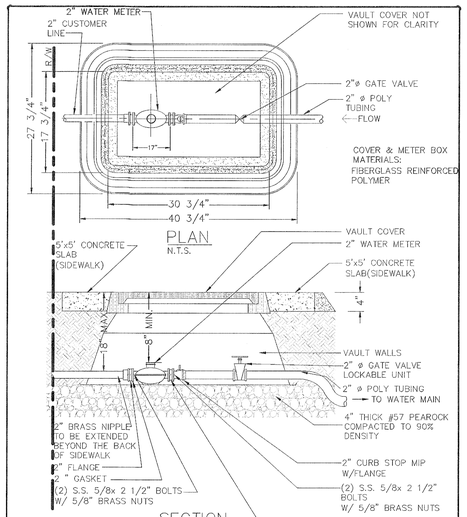

2" WATER METER DETAIL
N.T.S.

F:\WORK\BALLICAD-DWG\STANDARD\ROMB_ STANDARD_DETAILS\Public Works Manual\CMB Water Details

MIAMIBEACH PUBLIC WORKS DEPARTMENT 1700 CONVENTION CENTER DRIVE, MIAMI BEACH, FL 33139 | APPROVED 12/2006 | REVISED 01/23/2008 02/26/2010 05/13/2013 | TITLE: WATER DETAILS NO. 2 2" WATER METER DETAIL | WS11

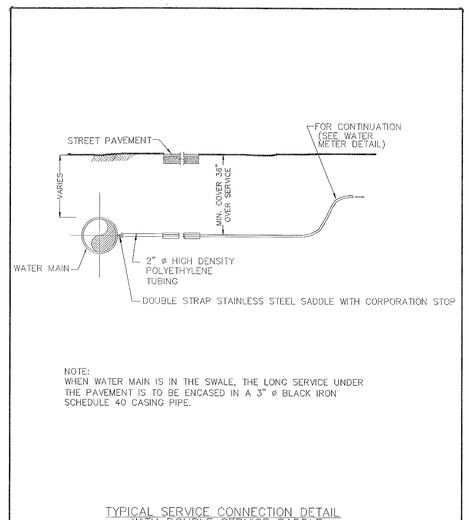

NOTE:
WHEN WATER MAIN IS IN THE SWALE, THE LONG SERVICE UNDER THE PAVEMENT IS TO BE ENCASED IN A 3" ø BLACK IRON SCHEDULE 40 CASING PIPE.

TYPICAL SERVICE CONNECTION DETAIL WITH DOUBLE SERVICE SADDLE
N.T.S.

F:\work\BALLICAD-DWG\STANDARD\ROMB_ STANDARD_DETAILS\Public Works Manual\CMB Water Details

MIAMIBEACH PUBLIC WORKS DEPARTMENT 1700 CONVENTION CENTER DRIVE, MIAMI BEACH, FL 33139 | APPROVED 10/14/2004 | REVISED 01/23/2008 12/2006 | TITLE: WATER DETAILS NO. 1 TYPICAL SERVICE CONNECTION DETAIL WITH DOUBLE SERVICE SADDLE | WS1 SHEET 1, OF 3#

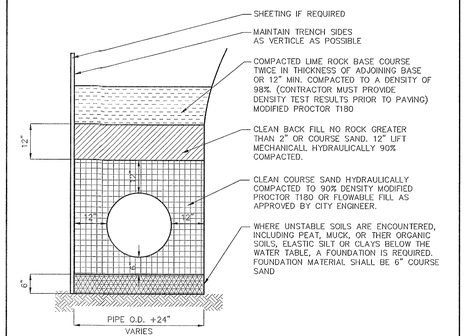

NOTES:
1. ALL DUCTILE IRON PIPE MUST BE AT LEAST CLASS 52.
2. ENCASE ALL D.I. PIPE AND BELL JOINT CLAMPS WITH POLYETHYLENE.
3. CONTRACTOR SHALL VERIFY LOCATION OF ALL UNDERGROUND UTILITIES.
4. CONSULTANTS ARE RESPONSIBLE FOR REVISING THE DETAILS AS NECESSARY, BASED ON THE RESULTS OF THEIR GEOTECHNICAL SURVEYS.

TYPICAL TRENCH SECTION
N.T.S.

F:\work\BALLICAD-DWG\STANDARD\ROMB_ STANDARD_DETAILS\Public Works Manual\CMB Site Earthwork Details

MIAMIBEACH PUBLIC WORKS DEPARTMENT 1700 CONVENTION CENTER DRIVE, MIAMI BEACH, FL 33139 | APPROVED 06/20/2007 | REVISED 12/2006 | TITLE: SITE EARTHWORK DETAILS NO.1 TYPICAL TRENCH SECTION | SES4 SHEET 4, OF 5

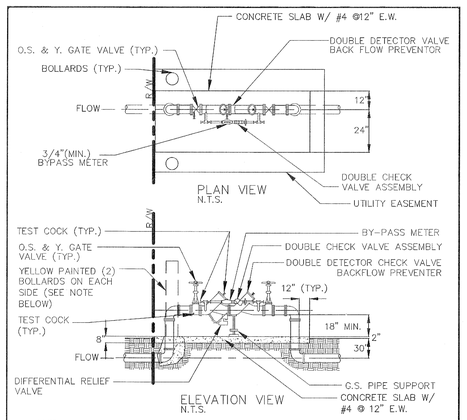

NOTE:
1. PIPING SHALL BE DUCTILE IRON PIPE W/ FLANGED FITTINGS, IN ACCORDANCE W/ W.A.S.D. "CONSTRUCTION SPECIFICATIONS 4-20."
2. BOLLARDS ARE NOT REQUIRED UNLESS IN TRAFFIC AREAS.
3. AS SPECIFIED IN THE LATEST REVISION OF THE AMERICAN WORKS ASSOCIATION MANUAL M14.
4. OWNER SHALL MAINTAIN THEIR REDUCED PRESSURE ZONE ASSEMBLY.

REDUCED PRESSURE ZONE ASSEMBLY CHECK VALVE
N.T.S.

F:\work\BALLICAD-DWG\STANDARD\ROMB_ STANDARD_DETAILS\Public Works Manual\CMB Water Details

MIAMIBEACH PUBLIC WORKS DEPARTMENT 1700 CONVENTION CENTER DRIVE, MIAMI BEACH, FL 33139 | APPROVED 12/2006 | REVISED - | TITLE: WATER DETAILS NO. 4 REDUCE PRESSURE ZONE ASSEMBLY CHECK VALVE | WS31 SHEET 13 OF 24

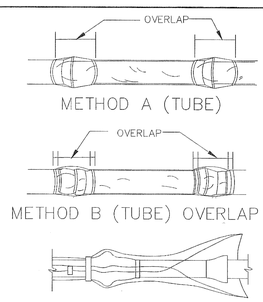

TABLE

NOMINAL PIPE DIAMETER (IN)	POLYETHYLENE FLAT TUBE WIDTH(IN)
4	16
6	20
8	24
12	30
16	37
20	45
24	54
30	67
36	81
42	95
48	108
54	121

POLYETHYLENE ENCASEMENT DETAIL
N.T.S.

F:\work\BALLICAD-DWG\STANDARD\ROMB_ STANDARD_DETAILS\Public Works Manual\CMB Water Details

MIAMIBEACH PUBLIC WORKS DEPARTMENT 1700 CONVENTION CENTER DRIVE, MIAMI BEACH, FL 33139 | APPROVED 04/22/2005 | REVISED 12/2006 - | TITLE: WATER DETAILS NO. 1 POLYETHYLENE ENCASEMENT DETAIL | WS7 SHEET 2, OF 3#

METHOD "A"

CUT THE POLYETHYLENE TUBE 2 FT. LONGER THAN THE LENGHT OF PIPE SECTION. SLIP THE TUBE AROUND THE PIPE SO AS TO ALLOW 1' OVERLAP AT EACH END. OVERLAP THE OTHER PIPE SECTION AFTER PIPE IS INSTALLED.

METHOD "B"

CUT THE POLYETHYLENE TUBE I FT. SHORTER THAN THE LENGHT OF PIPE SECTIONS. SLIP THE TUBE AROUND THE PIPE SO AS TO ALLOW 6" OF BARE PIPE AT EACH END. BEFORE MAKING A JOINT, SLIP A 3' LENGHT OF POLYETHYLENE TUBE OVER THE PRECEDING PIPE SECTION. OVERLAP BY AT LEAST 1' AND SECURE AFTER JOINT IS MADE.

METHOD "C"

EACH SECTION OF PIPE, FITTINGS OR VALVE ETC. IS COMPLETELY WRAPPED WITH A FLAT POLYETHYLENE SHEET OVERLAP BY AT LEAST 1' AND METHOD C (FLAT SHEET) SECURED.

NOTES:

1. ALL UNDERGROUND PIPES SHALL BE POLYWRAPPED.
2. TUBE SIZE WILL BE AS LISTED IN TABLE.
3. PIPE-SHAPED FITTINGS (BENDS,REDUCERS,ETC.) SHALL BE TREATED ACCORDING TO METHODS "A" AND "B". ODD SHAPED FITTINGS (VALVES,TEES,ETC.) SHALL BE TREATED ACCORDING TO METHOD "C"
4. 6" ADHESIVE TAPE SHALL BE USED TO SECURE ENCASEMENT
5. SPECIAL CARE SHALL BE TAKEN TO PREVENT DAMAGE TO WRAPPING WHEN PLACING BACKFILL.
6. REFER TO ASTM D1248 FOR APPROVED MATERAL AND ACCESSORIES
7. ONLY VIRGIN POLYETHYLENE MATERIAL HAVING A MINIMUM THICKNESS OF 8 MILS IS APPROVED.

POLYETHYLENE ENCASEMENT DETAIL NOTES

F:\work\BALLICAD-DWG\STANDARD\ROMB_ STANDARD_DETAILS\Public Works Manual\CMB Water Details

MIAMIBEACH PUBLIC WORKS DEPARTMENT 1700 CONVENTION CENTER DRIVE, MIAMI BEACH, FL 33139 | APPROVED 04/22/2005 | REVISED 12/2006 - | TITLE: WATER DETAILS NO. 1 POLYETHYLENE ENCASEMENT DETAIL NOTES | WS8 SHEET 3, OF 3#

MTCI
PRIVATE PROVIDER SERVICES, LLC
Construction Plans Review, Inspections, Testing & Consulting

	REVIEWER INITIALS	DATE REVIEWED
BUILDING		
STRUCTURAL		
MECHANICAL		
ELECTRICAL		
PLUMBING		
SITE CIVIL		

APPROVED
MIAMI BEACH
FIRE DEPARTMENT

NOTE:
ALL SCALES INDICATED PERTAIN TO FULL SIZE DRAWINGS 22"x34"

HADDON HALL HOTEL

1500 COLLINS AVENUE
MIAMI BEACH, FL 33139

COASTAL SYSTEMS INTERNATIONAL, INC.
464 South Dixie Highway
Coral Gables, Florida 33146
Tel: 305-661-3655
Fax: 305-661-1914
www.CoastalSystemsInt.com
State of Florida EB #7087
Coastal, Environmental, Civil Engineering and Management

CONSULTANTS

ISSUE	DATE	DESCRIPTION

PROJECT NO: 330300
DATUM: NGVD
DRAWN BY: OB
CHECKED BY: AP

ENGINEER OF RECORD

DRAWINGS NOT VALID WITHOUT ORIGINAL SEAL
2/3/14
Andres Perez
66507

WATER SERVICE DETAILS 1

WS-3

14 OF 20 SHEETS

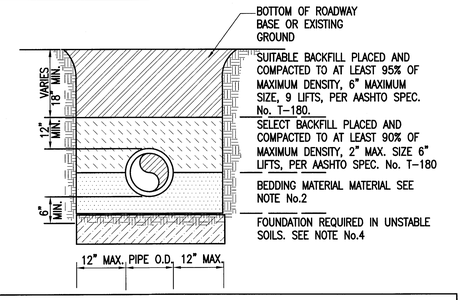

NOTES:

1. FOR EXCAVATION AND BACKFILL AROUND MANHOLES, APPURTENANCES, OR IN WATER REFER TO PROVISIONS WITHIN THE SPECIFICATIONS.
2. UNLESS OTHERWISE SPECIFIED, BEDDING MATERIAL SHALL CONSIST OF SELECTED BACKFILL MATERIAL 2" MAX. SIZE, OR WASHED AND GRADED LIMEROCK (3/8"-7/8"), COMPACTED TO AT LEAST 90% MAXIMUM DENSITY, 6" LIFTS, PER AASHTO SPEC. No. T-180.
3. WHERE REQUIRED, SHEETING AND SHORING SHALL BE IN ACCORDANCE WITH SPECIFICATION.
4. WHERE UNSTABLE SOILS ARE ENCOUNTERED, INCLUDING PEAT, MUCK OR OTHER ORGANIC SOILS, ELASTIC SILT AND CLAY BELOW THE WATER TABLE , A FOUNDATION IS REQUIRED.
   COMPACTED TO AT LEAST 90% OF MAX. DENSITY, 6" LIFT, PER AASHTO SPEC. No. T-180. FOUNDATION MATERIAL SHALL BE SELECTED BACKFILL MATERIAL, 2" MAX. SIZE 6" LIFTS EXTEND EXCAVATION AT LEAST 2' DEEPER FOR EXCAVATION UNLESS SUITABLE MATERIAL MATERIAL IS FOUND AT LESSER DEPTH, GREATER DEPTHS MAY BE REQUIRED FOR EXTREMLY POOR CONDITIONS.
5. POLYETHYLENE ENCASEMENT REQUIRED IN SOILS WITH HIGH COROSIVITY, INCLUDING POTENTIAL STRAY DIRECT CURRENTS, PER ANSI/AWWA C105/A215, METHOD A OR B, FOR TYPE I, CLASS C TUBE, MINIMUM 8 MILS THICK.

TYPICAL TRENCH BACKFILL STANDARD DETAIL WS 4.7

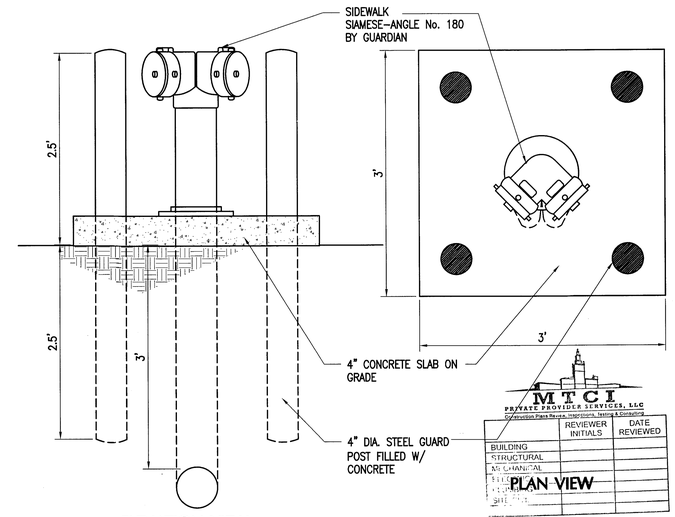

MTCI
PRIVATE PROVIDER SERVICES, LLC
Construction Plans Review, Inspections, Testing & Consulting

	REVIEWER INITIALS	DATE REVIEWED
BUILDING		
STRUCTURAL		
MECHANICAL		
[illegible]		
[illegible]		
[illegible]		

STAND PIPE DETAIL

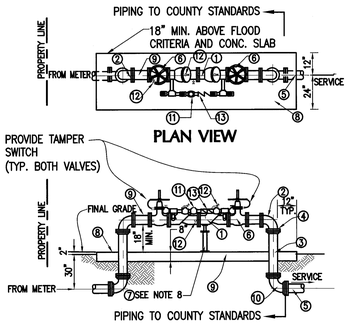

MATERIAL LEGEND

ITEM	QUANT.	DESCRIPTION
1	1	SIZE (INCHES)* DOUBLE DETECTOR CHECK VALVE BACKFLOW PREVENTER
2	2	SIZE (INCHES)* BEND - 90 (FLANGE-FLANGE)
3	*	SIZE (INCHES)* PIPE, DUCTILE IRON
4	2	SIZE (INCHES)* ADAPTER, FLANGE, D.I.P.
5	2	SIZE (INCHES)* PIPE, P.V.C. (DR-18) - PRIVATE
6	2	SIZE (INCHES)* OS & Y GATE VALVE, C.L. (FLANGE-FLANGE)
7	2	2" IRON PIPE / CONCRETE FOUNDATION
8	*	CONC. SLAB W/ #4 @ 12" E.W.
9	1	SIZE (INCHES)* WYE STRAINER
10	2	BEND - 90 (MJ-MJ)
11	1	3/4" BYPASS METER
12	4	TEST COCK
13	1	DOUBLE CHECK VALVE ASSEMBLY
		* REFER TO PLANS FOR SIZE

DOUBLE DETECTOR CHECK VALVE NOTES

1. THE ASSEMBLY SHALL BE INSTALLED WITH MINIMUM HORIZONTAL CLEARANCES OF 30 INCHES FREE FORM OBSTRUCTION IN ALL DIRECTIONS.
2. GUARD POSTS SHALL BE INSTALLED IF THE ASSEMBLY IS EXPOSED TO POSSIBLE DAMAGE FROM VEHICULAR TRAFFIC.
3. THE ASSEMBLY SHALL BE INSTALLED IN AN ACCESSIBLE LOCATION.
4. ALL JOINTS SHALL BE FLANGED OR RESTRAINED IN ACCORDANCE WITH DEPARTMENT STANDARDS.
5. ALL ABOVE GROUND PIPING AND EQUIPMENT SHALL BE FINISHED WITH RED ENAMEL PAINT (KOP-COAT 0508 LEAD-FREE), SO AS TO PREVENT CORROSION FROM OCEAN AIR.
6. THE OWNER WILL PROVIDE CHAINS AND LOCKS FOR GATE VALVES.
7. FOR RETROFIT PROJECTS, REPLACE THE EXISTING BACKFLOW PREVENTION DEVICE WITH A SPOOL PIECE, AND INSTALL A NEW DOUBLE DETECTOR CHECK VALVE ASSEMBLY INSIDE OF PROPERTY LINE. ANY EXISTING BACKFLOW PREVENTORS SHALL MEET CURRENT STANDARDS AND DETAILS SHOWN HEREIN.
8. ADJUSTABLE PIPE SADDLE SUPPORT (GRINNEL FIG. 264, OR EQUAL) SIZED TO FIT CURVATURE OF DOUBLE DETECTOR CHECK VALVE ASSEMBLY, WITH GALVANIZED STEEL PIPE AND FLOOR FLANGE. ATTACH FLOOR FLANGE TO CONCRETE SLAB WITH GALVANIZED EXPANSION BOLTS.
9. THE UTILITY SHALL HAVE UNRESTRICTED AN CONTINOUS ACCESS TO THE DOUBLE DETECTOR CHECK VALVE ASSEMBLY.
10. PIPE SHALL BE DUCTILE IRON PIPE WITH FLANGED FITTINGS, IN ACCORDANCE WITH MIAMI-DADE CONTY "CONSTRUCTION SPECIFICATIONS FOR DONATION OF WATER MAINS".

FIRELINE SERVICE DOUBLE DETECTOR CHECK VALVE STANDARD DETAIL WS 4.20

FIG. No.	WGT.	BARREL LENGTH
G-951A-1	167	52.50
G-951A-2	183	64.50
G-951A-3	199	76.50
G-951A-4	216	88.50
G-951A-5	232	100.50
G-951A-6	248	112.50
G-951A-7	264	124.50
G-951A-8	292	136.50
G-951A-9	309	140.50

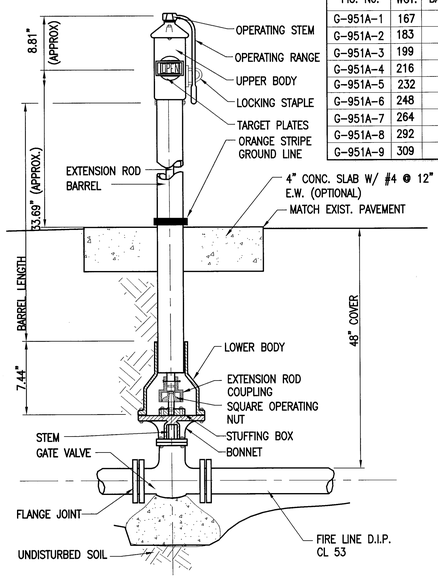

APPROVED MIAMI BEACH FIRE DEPARTMENT

VERTICAL POST INDICATOR STANDARD DETAIL

NOTE:
ALL SCALES INDICATED PERTAIN TO FULL SIZE DRAWINGS 22"x34"

HADDON HALL HOTEL

1500 COLLINS AVENUE
MIAMI BEACH, FL 33139

COASTAL SYSTEMS INTERNATIONAL, INC.
464 South Dixie Highway
Coral Gables, Florida 33146
Tel: 305-661-3655
Fax: 305-661-1914
www.CoastalSystemsInt.com
State of Florida EB #7087
Coastal, Environmental, Civil Engineering and Management

CONSULTANTS

ISSUE	DATE	DESCRIPTION

PROJECT NO: 330300
DATUM: NGVD
DRAWN BY: OB
CHECKED BY: AP

ENGINEER OF RECORD

DRAWINGS NOT VALID WITHOUT EMBOSSED SEAL
2/3/14
Andres Perez
66507

FIRE LINE DETAILS 2

WS-4

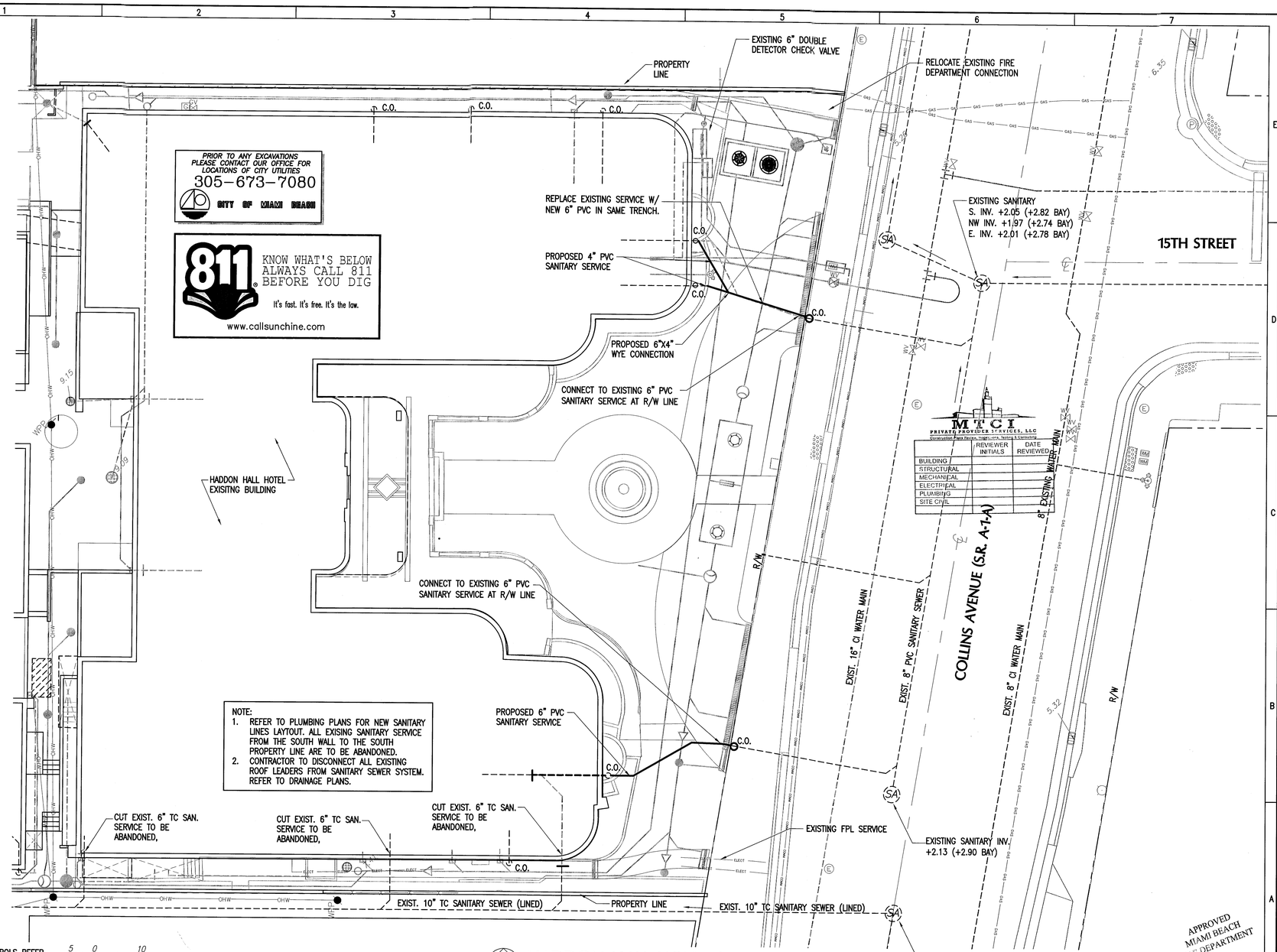

HADDON HALL HOTEL SITE PLAN 1

SCALE: 1:=10'

HADDON HALL HOTEL

1500 COLLINS AVENUE
MIAMI BEACH, FL 33139

COASTAL SYSTEMS INTERNATIONAL, INC.
464 South Dixie Highway
Coral Gables, Florida 33146
Tel: 305-661-3655
Fax: 305-661-1914
www.CoastalSystemsInt.com
State of Florida EB #7087
Coastal, Environmental, Civil Engineering and Management

CONSULTANTS

ISSUE	DATE	DESCRIPTION

PROJECT NO: 330300
DATUM: NGVD
DRAWN BY: OB
CHECKED BY: AP

ENGINEER OF RECORD

DRAWING NOT VALID WITHOUT EMBOSSED SEAL
2/3/14
Andres Perez
66507

SANITARY SEWER SERVICE SITE PLAN 1

SS-1

16 OF 20 SHEETS

PRIOR TO ANY EXCAVATIONS
PLEASE CONTACT OUR OFFICE FOR
LOCATIONS OF CITY UTILITIES
305-673-7080
CITY OF MIAMI BEACH

811 KNOW WHAT'S BELOW ALWAYS CALL 811 BEFORE YOU DIG
It's fast. It's free. It's the law.
www.callsunchine.com

LEGEND

EXISTING		PROPOSED
	WATER METER	
	WATER VALVE	
WATER	WATER MAIN	WATER
FH	FIRE HYDRANT	FH
N.A.	FIRE/DOMESTIC BACKFLOW PREVENTOR	
N.A.	IRRIGATION VACUUM BREAKER	
SAN	SANITARY SEWER	
SA	SEWER MANHOLE	
	DRAINAGE FLOW	
x8.11	SPOT ELEVATION	8.00
	STORM MANHOLE	
N.A.	DRAINAGE WELL	
	CATCH BASIN	
N.A.	DRAIN BASIN	

SCALE IN FEET
1" = 10'

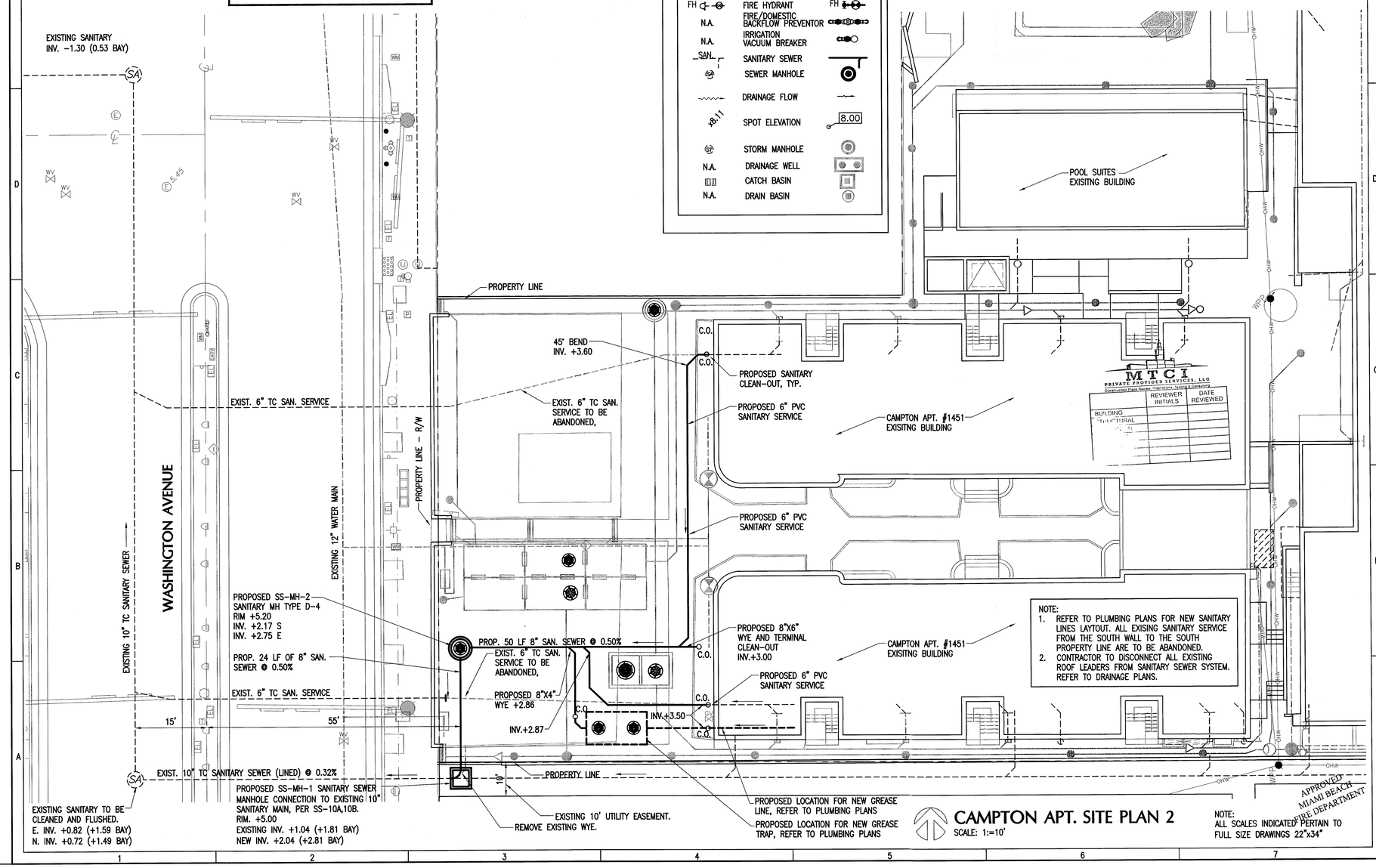

NOTE:
1. REFER TO PLUMBING PLANS FOR NEW SANITARY LINES LAYTOUT. ALL EXISING SANITARY SERVICE FROM THE SOUTH WALL TO THE SOUTH PROPERTY LINE ARE TO BE ABANDONED.
2. CONTRACTOR TO DISCONNECT ALL EXISTING ROOF LEADERS FROM SANITARY SEWER SYSTEM. REFER TO DRAINAGE PLANS.

CAMPTON APT. SITE PLAN 2

SCALE: 1:=10'

NOTE:
ALL SCALES INDICATED PERTAIN TO FULL SIZE DRAWINGS 22"x34"

HADDON HALL HOTEL

1500 COLLINS AVENUE
MIAMI BEACH, FL 33139

COASTAL SYSTEMS INTERNATIONAL, INC.
464 South Dixie Highway
Coral Gables, Florida 33146
Tel: 305-661-3655
Fax: 305-661-1914
www.CoastalSystemsInt.com
State of Florida EB #7087
Coastal, Environmental,
Civil Engineering and Management

CONSULTANTS

ISSUE	DATE	DESCRIPTION

PROJECT NO:	330300
DATUM:	NGVD
DRAWN BY:	OB
CHECKED BY:	AP

ENGINEER OF RECORD

DRAWINGS NOT VALID WITHOUT EMBOSSED SEAL
Andres Perez
66507

SANITARY SEWER SERVICE SITE PLAN 2

SS-2

17 OF 20 SHEETS

CITY OF MIAMI BEACH PUBLIC WORKS DEPARTMENT WATER & SEWER NOTES:

1. ALL MATERIALS AND LABOR UNDER THIS PROJECT SHALL BE IN STRICT ACCORDANCE WITH THE REQUIREMENTS OF THE MIAMI DADE COUNTY PUBLIC WORKS MANUAL AND THE CITY OF MIAMI BEACH PUBLIC WORKS DEPARTMENT AND SHALL CONFORM TO THE STANDARDS AND SPECIFICATIONS AVAILABLE AND ON FILE WITH THE DEPARTMENT.
2. CONTRACTOR MUST FIELD VERIFY THE LOCATION OF ALL EXISTING UTILITIES WITHIN THE EXCAVATION LIMITS PRIOR TO COMMENCE ANY KIND OF UNDERGROUND ACTIVITY. LOCATIONS OF UNDERGROUND UTILITIES ARE INDICATED ON THESE PLANS IS FROM THE BEST AVAILABLE INFORMATION, HOWEVER, THE ACTUAL LOCATIONS MAY VARY FROM THOSE SHOWN. THE ENGINEER AND THE DEPARTMENT ASSUMES NO LIABILITY FOR ACCURACY.
3. THE CONTRACTOR MUST CALL THE PUBLIC WORKS DEPARTMENT INSPECTION DIVISION TO ARRANGE FOR A PERMIT AND A PRE-CONSTRUCTION MEETING 48 HOURS PRIOR TO PROPOSED START OF CONSTRUCTION.
4. DEPARTMENT PERSONNEL WILL INSPECT ALL FACILITIES APPROVED BY THIS DEPARTMENT. ALL OTHER REQUIREMENTS OF THE PERMITTING AGENCY SHALL BE IN ACCORDANCE WITH THEIR STANDARDS AND REQUIREMENTS.
5. WORK PERFORMED UNDER THIS PROJECT WILL NOT BE CONSIDERED AS COMPLETE UNTIL FINAL ACCEPTANCE OF THE SYSTEM BY THE DEPARTMENT ARE RECEIVED AND APPROVED BY THE DEPARTMENT.
6. THE CONTRACTOR MUST SUBMIT "AS BUILT" MYLAR 24"x36" SHOWING SPECIFIC LOCATIONS DEPTH, ETC. OF ALL THE NEW UTILITIES AND FACILITIES AS LOCATED BY A LICENSED SURVEYOR, ALONG WITH TWO (2) PRINTS OF THE "AS BUILT" SIGNED AND SEALED BY A REGISTERED SURVEYOR OR ENGINEER.
7. ALL NEW CONNECTIONS FROM EXISTING DEPARTMENT MAINS TO BE MADE BY DEPARTMENT FORCES ONLY.

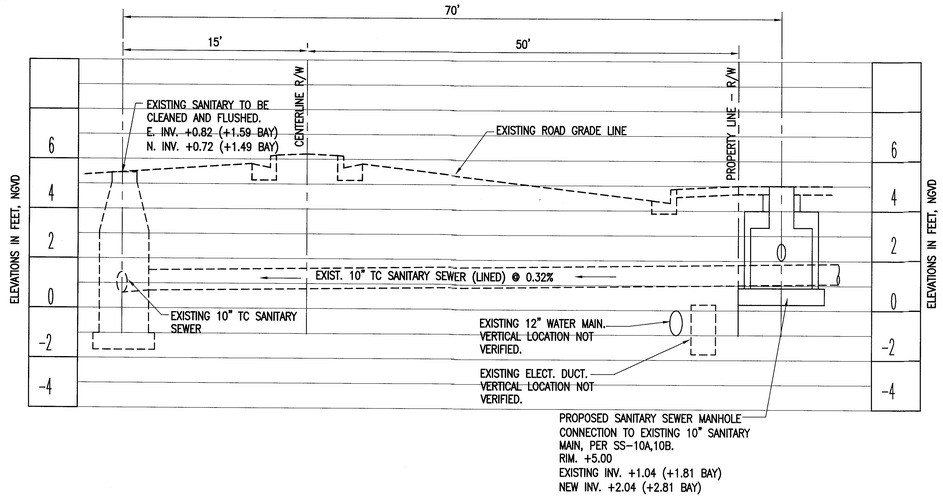

EXISTING 10" SANITARY SEWER PROFILE 1

H SCALE: 1"=5', V SCALE: 1"=2.5'

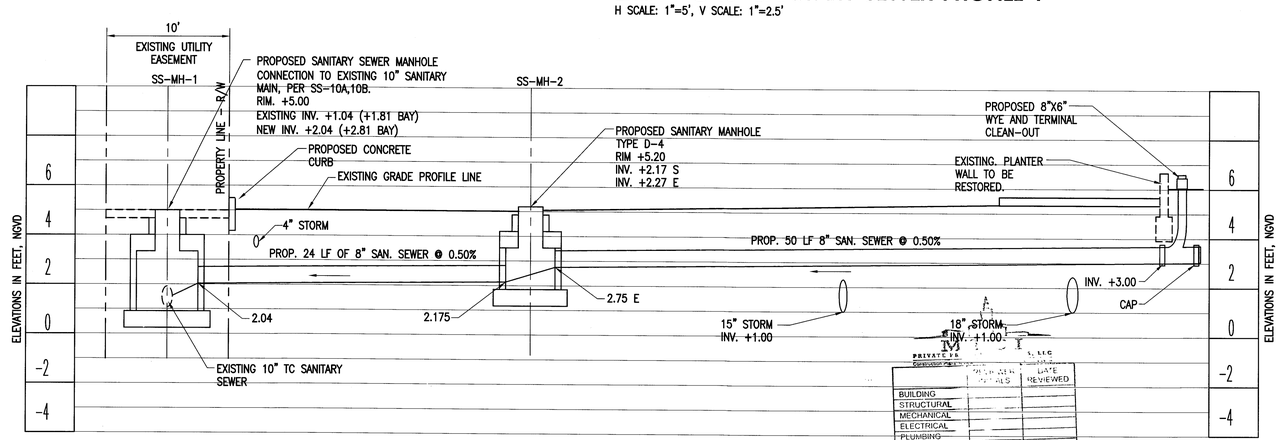

PROPOSED SANITARY SEWER SERVICE PROFILE 2

H SCALE: 1"=5', V SCALE: 1"=2.5'

	DATE RECEIVED	DATE REVIEWED
BUILDING		
STRUCTURAL		
MECHANICAL		
ELECTRICAL		
PLUMBING		
SITE CIVIL		

APPROVED MIAMI BEACH FIRE DEPARTMENT

NOTE:
ALL SCALES INDICATED PERTAIN TO FULL SIZE DRAWINGS 22"x34"

HADDON HALL HOTEL

1500 COLLINS AVENUE
MIAMI BEACH, FL 33139

COASTAL SYSTEMS INTERNATIONAL, INC.
464 South Dixie Highway
Coral Gables, Florida 33146
Tel: 305-661-3655
Fax: 305-661-1514
www.CoastalSystemsInt.com
State of Florida EB #7087
Coastal, Environmental, Civil Engineering and Management

CONSULTANTS

ISSUE	DATE	DESCRIPTION

PROJECT NO: 330300
DATUM: NGVD
DRAWN BY: OB
CHECKED BY: AP

ENGINEER OF RECORD

NOT VALID WITHOUT EMBOSSED SEAL
2/3/14
Andres Perez
66507

SANITARY SEWER PROFILE AND NOTES

SS-3

18 OF 20 SHEETS

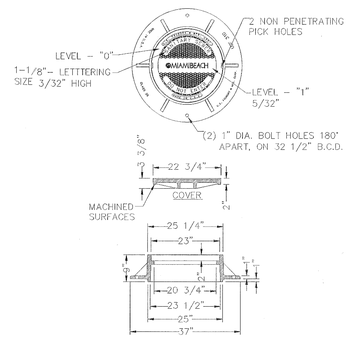

NOTES:
1. USE TRAFFIC RATED FOR TRAVEL AREAS
2. USE PEDESTRIAN DESIGN COVER FOR SIDEWALK AND WALKWAYS

SANITARY SEWER MANHOLE
US FOUNDRY 310 RING & COVER
N.T.S.

F:\work\BALLICAD-DWG\STANDARD\ICMB_ STANDARD_DETAILS\Public Works Manual\CMB Sanitary Details

MIAMIBEACH PUBLIC WORKS DEPARTMENT 1700 CONVENTION CENTER DRIVE, MIAMI BEACH, FL 33139 | APPROVED 12/2006 | REVISED | TITLE: SANITARY SEWER DETAILS NO.1 SANITARY SEWER MANHOLE US FOUNDRY 310 RING & COVER | SS1 SHEET 2, OF 5

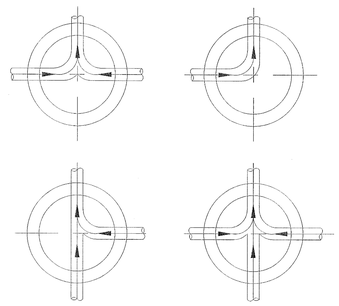

DETAIL "B"

NOTE:

1. INVERT CHANNELS TO BE CONSTRUCTED FOR SMOOTH FLOW WITH NO OBSTRUCTIONS
2. SPILLWAYS SHALL BE CONSTRUCTED BETWEEN PIPES WITH DIFFERENT INVERT ELEVATIONS PROVIDING FOR SMOOTH FLOWS
3. CHANNELS FOR FUTURE CONNECTIONS (STUBS) SHALL BE CONSTRUCTED, FILLED WITH SAND AND COVERED WITH 1" OF MORTAR.

FLOW PATTERNS
FOR INVERT CHANNELS
N.T.S.

F:\work\BALLICAD-DWG\STANDARD\ICMB_ STANDARD_DETAILS\Public Works Manual\CMB Sanitary Details

MIAMIBEACH PUBLIC WORKS DEPARTMENT 1700 CONVENTION CENTER DRIVE, MIAMI BEACH, FL 33139 | APPROVED 12/2006 | REVISED | TITLE: SANITARY SEWER DETAILS NO.1 FLOW PATTERNS FOR INVERT CHANNELS | SS5 SHEET 5, OF 5

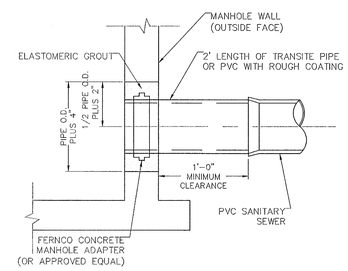

DETAIL "A" (SEE DETAIL SS14)
N.T.S.

F:\WORK\BALLICAD-DWG\STANDARD\ICMB_ STANDARD_DETAILS\Public Works Manual\CMB Sanitary Details

MIAMIBEACH PUBLIC WORKS DEPARTMENT 1700 CONVENTION CENTER DRIVE, MIAMI BEACH, FL 33139 | APPROVED 12/2006 | REVISED 12/16/2008 | TITLE: SANITARY SEWER DETAILS NO.3 DETAIL "A" (SEE DETAIL SS14) | SS15

MTCI PRIVATE PROVIDER SERVICES, LLC Construction Plans Review, Inspections, Testing & Consulting

	REVIEWER INITIALS	DATE REVIEWED
BUILDING		
STRUCTURAL		
MECHANICAL		
ELECTRICAL		
PLUMBING		
SITE CIVIL		

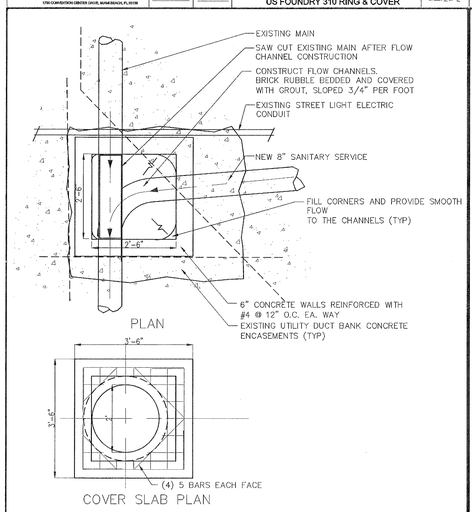

STANDARD MANHOLE OVER EXISTING MAIN
N.T.S.

F:\work\BALLICAD-DWG\STANDARD\ICMB_ STANDARD_DETAILS\Public Works Manual\CMB Sanitary Details

MIAMIBEACH PUBLIC WORKS DEPARTMENT 1700 CONVENTION CENTER DRIVE, MIAMI BEACH, FL 33139 | APPROVED 05/13/2009 | REVISED | TITLE: SANITARY SEWER DETAILS NO.2 STANDARD MANHOLE OVER EXISTING MAIN | SS10a SHEET 32 OF 52

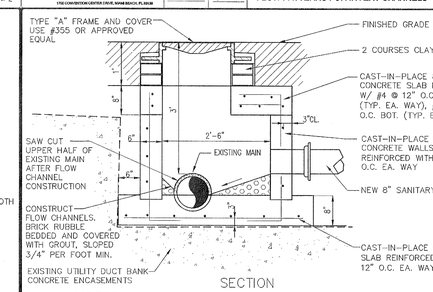

NOTES:

1. BRICK MASONRY CONSTRUCTION TO BE STUCCO WITH 3/4" MORTAR INSIDE AND OUTSIDE.
2. CONCRETE TO BE SEAL COATED WITH 16 MIL THICKNESS APPROVED COATING.
3. ALL OPENINGS SHALL BE SEALED WITH GROUT. (TYPE 2 CEMENT)
4. A FLOW CHANNEL SHALL BE CONSTRUCTED INSIDE MANHOLE TO DIRECT INFLUENT INTO FLOW STREAM.
5. INVERT CHANNELS ARE TO BE CONSTRUCTED FOR SMOOTH FLOW WITH NO OBSTRUCTION.
6. SPILLWAYS SHALL BE CONSTRUCTED BETWEEN PIPES WITH DIFFERENT INVERT ELEVATIONS PROVIDING FOR SMOOTH FLOWS.
7. ALL CONCRETE MATERIALS, REINFORCEMENT AND CONSTRUCTION SHALL BE IN ACCORDANCE WITH FDOT SPECIFICATION 346, 400 AND 415 EXCEPT AS NOTED.
8. CONCRETE COVER SHALL BE 3" TO OUTSIDE OF BAR TO EXTERIOR WALL.
9. ALL CAST-IN-PLACE CONCRETE SHALL BE A MINIMUM OF 4000 PSI COMPRESSIVE STRENGTH AT 28 DAYS.
10. PROVIDE AN FDOT-APPROVED MIX DESIGN FOR A CLASS IV CONCRETE FOR AN EXTREMELY AGGRESSIVE (MARINE) ENVIRONMENT. PROVIDE SUFFICIENT AMOUNT OF FLY ASH, MICROSILICA, OR SLAG TO THE CEMENT CONTENT TO INCREASE IMPERMEABILITY OF CONCRETE. CURE PLACED CONCRETE IN ACCORDANCE WITH FDOT SPECIFICATION 400-16.1 AND ACI SPECIFICATION 5.11.
11. REINFORCEMENT SHALL BE ASTM A615, GRADE 60.

STANDARD MANHOLE OVER EXISTING MAIN
N.T.S.

F:\work\BALLICAD-DWG\STANDARD\ICMB_ STANDARD_DETAILS\Public Works Manual\CMB Sanitary Details

MIAMIBEACH PUBLIC WORKS DEPARTMENT 1700 CONVENTION CENTER DRIVE, MIAMI BEACH, FL 33139 | APPROVED 05/13/2009 | REVISED | TITLE: SANITARY SEWER DETAILS NO.2 STANDARD MANHOLE OVER EXISTING MAIN | SS10b SHEET 33 OF 52

F:\work\BALLICAD-DWG\STANDARD\ICMB_ STANDARD_DETAILS\Public Works Manual\CMB Sanitary Details

MIAMIBEACH PUBLIC WORKS DEPARTMENT 1700 CONVENTION CENTER DRIVE, MIAMI BEACH, FL 33139 | APPROVED 12/2006 | REVISED | TITLE: SANITARY SEWER DETAILS NO.2 JOINT FOR DISSIMILAR GRAVITY SEWER PIPE | SS7 SHEET 27 OF 52

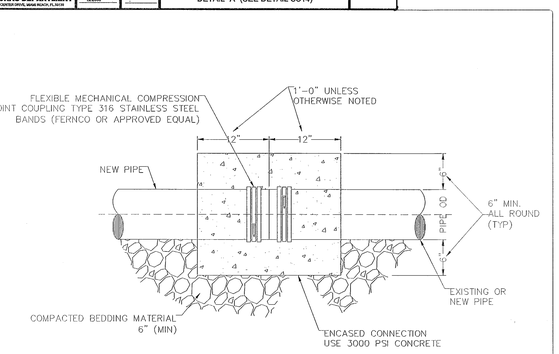

JOINT FOR DISSIMILAR
GRAVITY SEWER PIPE
N.T.S.

APPROVED MIAMI BEACH FIRE DEPARTMENT

NOTE:
ALL SCALES INDICATED PERTAIN TO FULL SIZE DRAWINGS 22"x34"

HADDON HALL HOTEL

1500 COLLINS AVENUE
MIAMI BEACH, FL 33139

COASTAL SYSTEMS INTERNATIONAL
COASTAL SYSTEMS INTERNATIONAL, INC
464 South Dixie Highway,
Coral Gables, Florida 33146
Tel: 305-661-3655
Fax: 305-661-1914
www.CoastalSystemsInt.com
State of Florida EB #7087
Coastal, Environmental,
Civil Engineering and Management

CONSULTANTS

ISSUE	DATE	DESCRIPTION

PROJECT NO: 330300
DATUM: NGVD
DRAWN BY: OB
CHECKED BY: AP

ENGINEER OF RECORD

DRAWINGS NOT VALID WITHOUT EMBOSSED SEAL
2/3/14
Andres Perez
66507

SANITARY SEWER CITY DETAILS 1

SS-4

19 OF 20 SHEETS

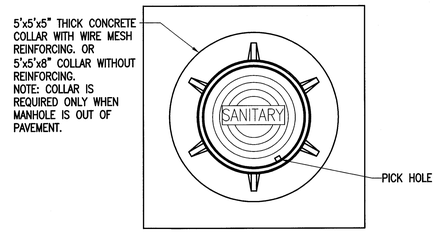

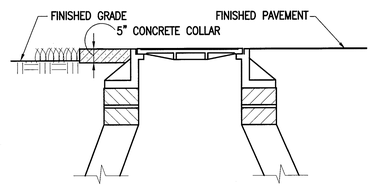

NOTES

1. COLLAR IS REQUIRED ONLY WHEN MANHOLE IS OUT OF PAVEMENT.
2. MINIMUM WEIGHTS: COVER – 170 LBS., FRAME – 200 LBS.
3. FRAME AND COVER SHALL BE U.S. FOUNDRY NO. 578 OR EQUAL
4. MANHOLE COVER SHALL HAVE THE WORDS "SANITARY" CAST IN METAL.

PRIVATE SANITARY MANHOLE FRAME AND COVER INSTALLATION DETAIL

NOTES:

1. CONCRETE TO BE SEAL COATED WITH 16 MIL THICKNESS APPROVED COATING.
2. LIFT HOLES THROUGH PRECAST STRUCTURE STRUCTURE ARE NOT PERMITTED.
3. SEE TECHNICAL SPECIFICATIONS FOR PLACEMENT OF CONSTRUCTION JOINTS.
4. ALL OPENINGS SHALL BE SEALED WITH GROUT. (TYPE 2 CEMENT)
5. A FLOW CHANNEL SHALL BE CONSTRUCTED INSIDE MANHOLE TO DIRECT INFLUENT INTO FLOW STREAM.
6. PROVIDE SHOP DRAWINGS OF STRUCTURES.
7. PRECAST CONCRETE MANHOLES SHALL CONFORM TO ASTM C478, SHALL BE TYPE II ACID RESISTANT CEMENT AND SHALL ATTAIN A MINIMUM COMPRESSIVE STRENGTH OF 4000 P.S.I. IN 28 DAYS.

TYPE	A	B	C	D	E	F	G	H
D-4	4'-0"	8"	8"	#4 @ 12" O.C.	#4 @ 12" O.C.	6'-4"ø	5'-4"ø	#4 @ 12" O.C
D-6	6'-0"	8"	10"	#5 @ 12" O.C.	#5 @ 12" O.C.	8'-4"ø	7'-4"ø	#5 @ 12" O.C

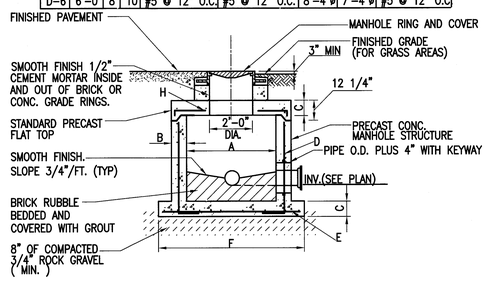

SANITARY SHALLOW MANHOLE DETAIL TYPE D BOX

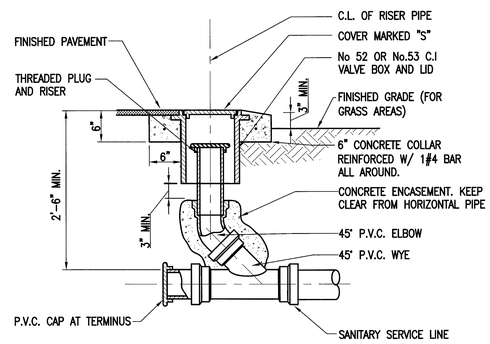

TYPICAL SANITARY TERMINAL CLEAN-OUT DETAIL

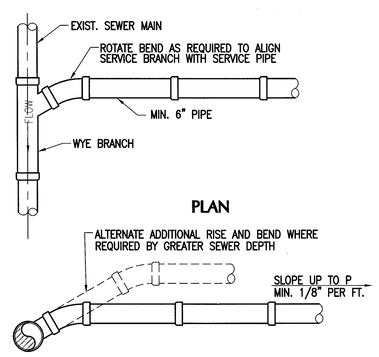

WYE BRANCH CONNECTION STANDARD DETAIL

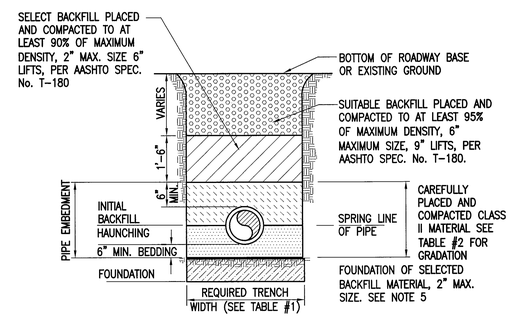

NOTES:

1. FOR EXCAVATION AND BACKFILL AROUND MANHOLES, APPURTENANCES, OR IN WATER REFER TO PROVISIONS WITHIN THE SPECIFICATIONS.
2. CLASS II MATERIALS ARE WELL GRADED COURSE SAND AND GRAVEL SEE NOTE No. 2 FOR GRADATION REQUIREMENTS.
3. WHERE REQUIRED, SHEETING AND SHORING SHALL BE IN ACCORDANCE WITH SPECIFICATION.
4. UNSTABLE SOILS ARE PEAT, MUCK OR OTHER ORGANIC SOILS, ELASTIC SILT AND CLAYS BELOW THE WATER TABLE, AND FINE SANDS BELOW WATER TABLE.
5. EXTEND EXCAVATION AT 2' DEEPER FOR FOUNDATION UNLESS SUITABLE MATERIAL IS FOUND AT A LESSER DEPTH. GREATER DEPTHS MAY BE REQUIRED FOR EXTREMELY POOR CONDITIONS.

TYPICAL TRENCH CONSTRUCTION FOR PVC PIPE GRAVITY SEWERS STANDARD DETAIL SS 18.0

APPROVED MIAMI BEACH FIRE DEPARTMENT

NOTE:
ALL SCALES INDICATED PERTAIN TO FULL SIZE DRAWINGS 22"x34"

MTCI
PRIVATE PROVIDER SERVICES, LLC
Construction Plans Review, Inspections, Testing & Consulting

	REVIEWER INITIALS	DATE REVIEWED
BUILDING		
STRUCTURAL		
MECHANICAL		
ELECTRICAL		
PLUMBING		
VPI		

HADDON HALL HOTEL

1500 COLLINS AVENUE
MIAMI BEACH, FL 33139

COASTAL SYSTEMS INTERNATIONAL, INC.
464 South Dixie Highway
Coral Gables, Florida 33146
Tel: 305-661-3655
Fax: 305-661-3944
www.CoastalSystemsInt.com
State of Florida EB #7087
Coastal, Environmental, Civil Engineering and Management

CONSULTANTS

ISSUE	DATE	DESCRIPTION

PROJECT NO: 330300
DATUM: NGVD
DRAWN BY: OB
CHECKED BY: AP

ENGINEER OF RECORD

DRAWINGS VALID WITHOUT EMBOSSED SEAL
2/3/14
Andres Perez
66507

SANITARY SEWER DETAILS 2

SS-5

20 OF 20 SHEETS

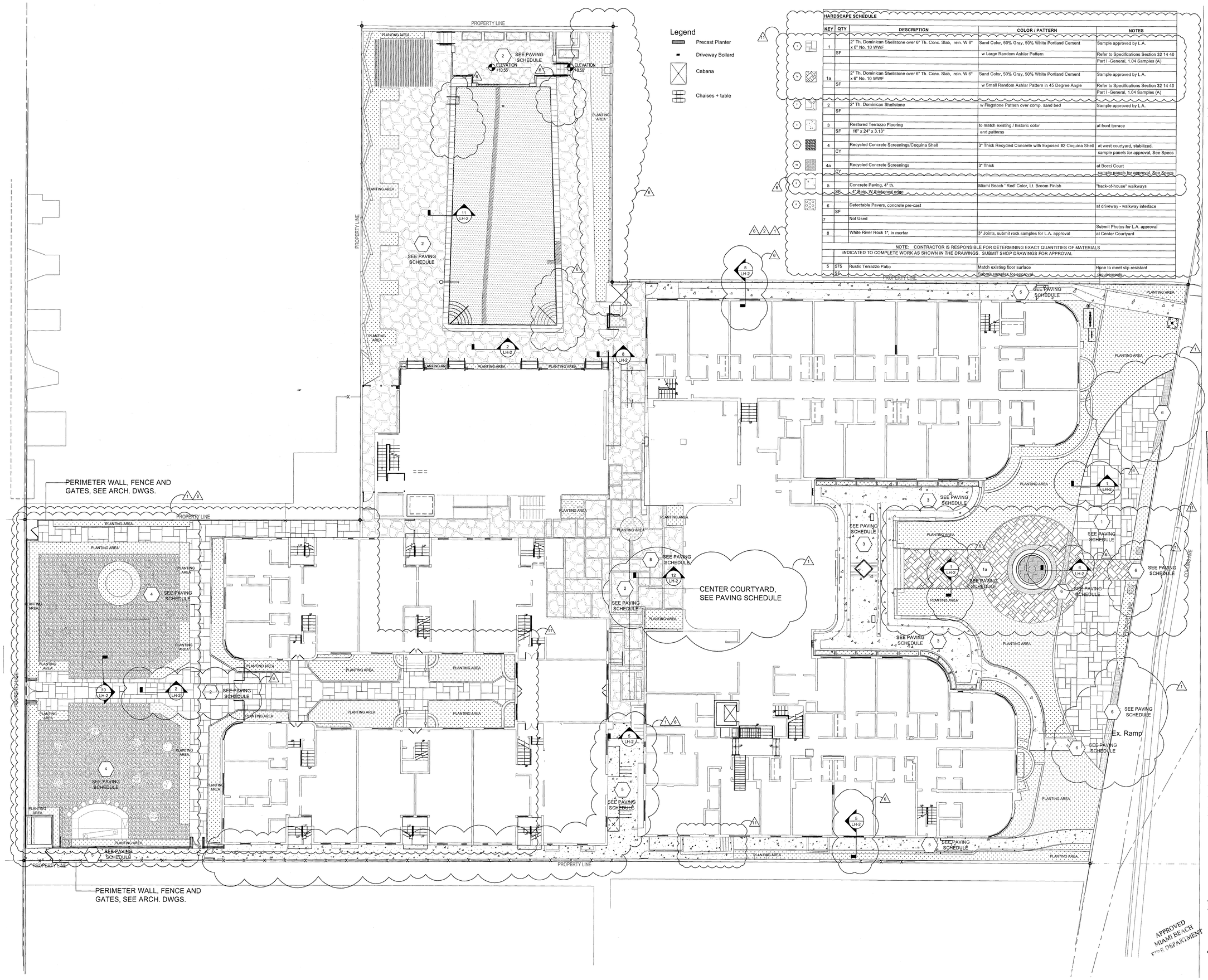

HARDSCAPE SCHEDULE					
KEY	QTY	DESCRIPTION	COLOR / PATTERN	NOTES
1		2" Th. Dominican Shellstone over 6" Th. Conc. Slab, rein. W 6" x 6" No. 10 WWF	Sand Color, 50% Gray, 50% White Portland Cement	Sample approved by L.A.
	SF		w Large Random Ashlar Pattern	Refer to Specifications Section 32 14 40
				Part I -General, 1.04 Samples (A)
1a		2" Th. Dominican Shellstone over 6" Th. Conc. Slab, rein. W 6" x 6" No. 10 WWF	Sand Color, 50% Gray, 50% White Portland Cement	Sample approved by L.A.
	SF		w Small Random Ashlar Pattern in 45 Degree Angle	Refer to Specifications Section 32 14 40
				Part I -General, 1.04 Samples (A)
2		2" Th. Dominican Shellstone	w Flagstone Pattern over comp. sand bed	Sample approved by L.A.
	SF			
3		Restored Terrazzo Flooring	to match existing / historic color	at front terrace
	SF	16" x 24" x 3.13"	and patterns	
4		Recycled Concrete Screenings/Coquina Shell	3" Thick Recycled Concrete with Exposed #2 Coquina Shell	at west courtyard, stabilized.
	CY			sample panels for approval, See Specs
4a		Recycled Concrete Screenings	3" Thick	at Bocci Court
	CY			sample panels for approval, See Specs
5		Concrete Paving, 4" th.	Miami Beach ' Red' Color, Lt. Broom Finish	"back-of-house" walkways
	SF	4" Reg. W Thickened edge		
6		Detectable Pavers, concrete pre-cast		at driveway - walkway interface
	SF			
7		Not Used		
				Submit Photos for L.A. approval
8		White River Rock 1", in mortar	3" Joints, submit rock samples for L.A. approval	at Center Courtyard
NOTE: CONTRACTOR IS RESPONSIBLE FOR DETERMINING EXACT QUANTITIES OF MATERIALS INDICATED TO COMPLETE WORK AS SHOWN IN THE DRAWINGS. SUBMIT SHOP DRAWINGS FOR APPROVAL				
5	575	Rustic Terrazzo Patio	Match existing floor surface	Hone to meet slip resistant
	SF		Submit samples for approval	Jacuzzi pavers

HADDON HALL
1500 COLLINS AVE
MIAMI BEACH, FL

KEYPLAN N.T.S.

REVISIONS

NO.	DESCRIPTION	ISSUE DATE
1	Progress to 100% CD Set	02/18/2014
2	Permit Review Comments	02/21/2014
6	P&Z Comments	04/18/2014
11	P&Z Comments	07/10/2014

MTCI
PRIVATE PROVIDER SERVICES, LLC
Construction Plans Review, Inspections, Testing & Certifications

	REVIEWER INITIALS	DATE REVIEWED
BUILDING		
STRUCTURAL		
MECHANICAL		
ELECTRICAL		
PLUMBING		
SITE CIVIL		

savinomiller
DESIGN STUDIO
LANDSCAPE ARCHITECTURE | URBAN DESIGN | ARCHITECTURE
12245 NE 6TH AVENUE A NORTH MIAMI, FLORIDA 33161
T. 305.895.9082 F. 305.895.9083 WWW.SAVINOMILLER.COM
AA0002443 LC 000208

PHASE 1
PERMIT SET

NORTH SEAL

Jonathan Cardello
Lic. # AR93391

ADD Inc Architecture Interiors Planning

One Biscayne Tower
Suite 1670
Two South
Biscayne Boulevard
Miami, Fl 33131
T. 305.482.8700
F. 305.482.8770
www.addinc.com
Lic. # AA26001507

Boston Miami

JOB NUMBER:	13036.00
CHECKED BY:	
ISSUE DATE:	JANUARY 24, 2014
SCALE:	1" = 10'-0"

SHEET TITLE

LANDSCAPE HARDSCAPE PLAN

SHEET NUMBER

LH-1

APPROVED MIAMI BEACH FIRE DEPARTMENT

COPYRIGHT ADD INC 2011

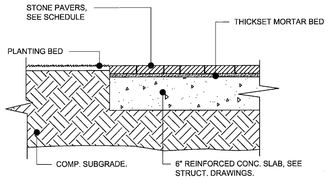

1 NATURAL PAVER OVER REIN. CONCR. SLAB
SCALE : NTS

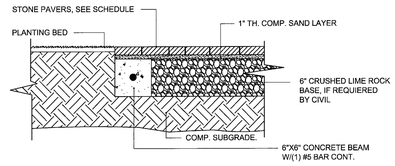

2 NATURAL PAVER OVER SAND BED
SCALE : NTS

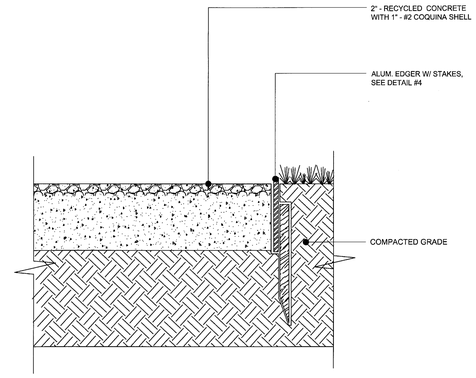

3 RECYCLED CONCRETE - COQUINA PAVING
SCALE : NTS

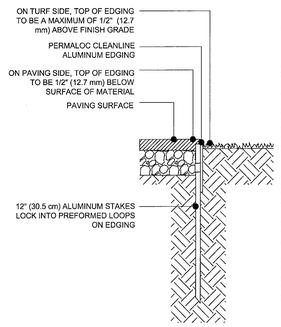

NOTES:

1. 16'-0" (4.9 m) SECTIONS TO INCLUDE (5) 12" (30.5 cm) ALUMINUM STAKES. 8'-0" (2.44 cm) SECTIONS TO INCLUDE (3) 12" (30.5 cm) ALUMINUM STAKES.

2. MINIMUM WALL THICKNESS: 1/8" (3.2 mm) RESTRAINTS- 0.70" (1.77 mm) 3/16" (4.8 mm) RESTRAINTS - 110 (2.79 mm).
3. COMPACT GRADES ADJACENT TO EDGING TO AVOID SETTLING.

4. CONNECTION BETWEEN SECTIONS TO UTILIZE MANUFACTURERS INTERLOCKING SNAPDOWN SPLICING SYSTEM.

5. CORNERS - CUT BASE OF EDGING UP HALF WAY AND FORM A CONTINUOUS CORNER.

6. PERMALOC CLEANLINE AS MANUFACTURED BY PERMALOC CORPORATION, HOLLAND, MICHIGAN. 800-356-9660. 616-399-9600 OR APPROVED EQUAL.

4 ALUMINUM EDGER- TYP.
SCALE : NTS

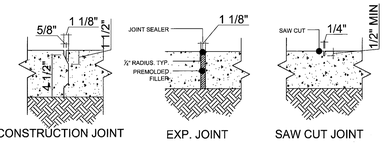

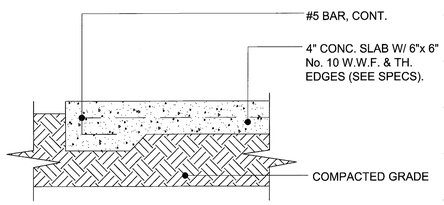

5 CONCRETE SLAB -TYP.
SCALE :NTS

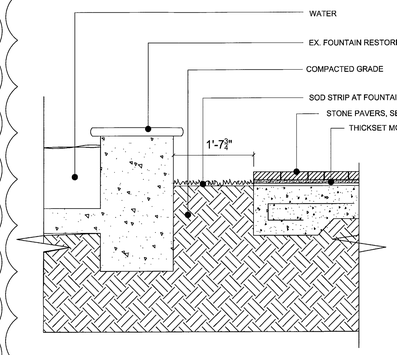

6 EX. FOUNTAIN SECTION
SCALE:NTS

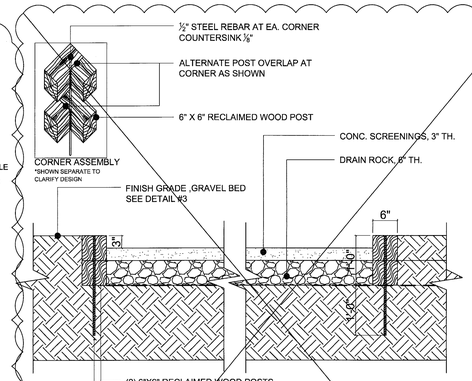

7 RECESSED GRAVEL AREA TYPICAL SECTION
SCALE:NTS

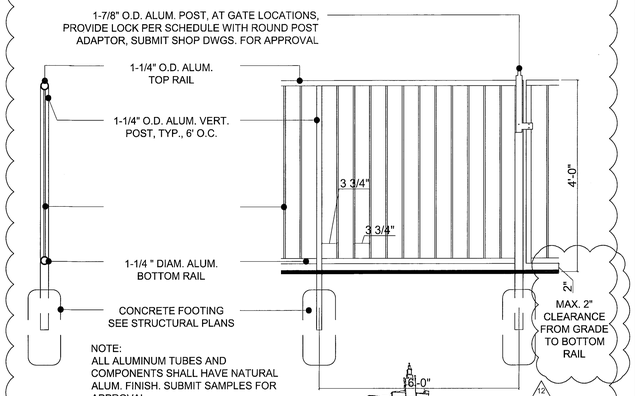

NOTE:
ALL ALUMINUM TUBES AND COMPONENTS SHALL HAVE NATURAL ALUM. FINISH. SUBMIT SAMPLES FOR APPROVAL.

MTCI
PRIVATE PROVIDER SERVICES, LLC
Construction Plans Review, Inspections, Testing & Consulting

	REVIEWER INITIALS	DATE REVIEWED
BUILDING		
STRUCTURAL		
MECHANICAL		
ELECTRICAL		
PLUMBING		

8 FENCE: SECTION & ELEVATION
SCALE : NTS

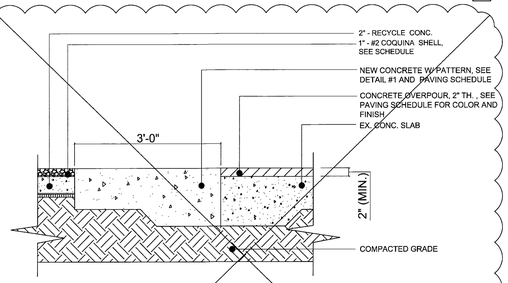

9 CONCRETE SLAB W/ OVERPOUR SECTION
SCALE : NTS

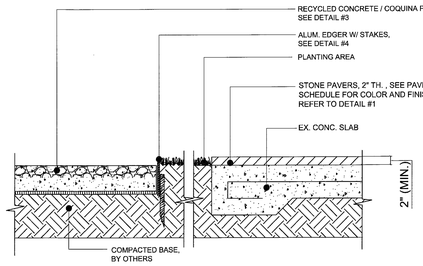

10 GRAVEL WALKWAY DETAIL
SCALE : NTS

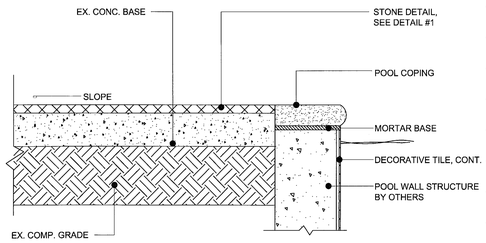

11 STONE PAVER SECTION @ POOL COPING
SCALE : NTS

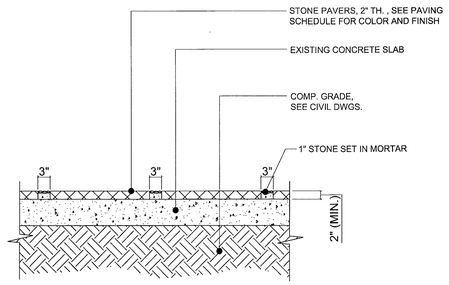

12 STONE PAVING & GRAVEL DETAIL
SCALE : NTS

APPROVED MIAMI BEACH FIRE DEPARTMENT

HADDON HALL
1500 COLLINS AVE
MIAMI BEACH, FL

KEYPLAN N.T.S.

REVISIONS

NO.	DESCRIPTION	ISSUE DATE
1	Progress to 100% CD Set	02/18/2014
2	Permit Review Comments	02/21/2014
6	P&Z Comments	04/18/2014
12	Fire & MTCI PERMIT COMMENTS	8/21/14

savinomiller
DESIGN STUDIO
LANDSCAPE ARCHITECTURE | URBAN DESIGN | ARCHITECTURE
12345 NE 6TH AVENUE A NORTH MIAMI, FLORIDA 33161
T. 305.895.9082 F. 305.895.9083 WWW.SAVINOMILLER.COM
AA0602469 LC C00208

PHASE 1
PERMIT SET

SEAL

Jonathan Cardello
Lic. # AR93391

ADD Inc
Architecture Interiors Planning
One Biscayne Tower
Suite 1670
Two South
Biscayne Boulevard
Miami, Fl 33131
T. 305.482.8700
F. 305.482.8770
www.addinc.com
Lic. # AA26001507
Boston Miami

JOB NUMBER:	13036.00
CHECKED BY:	
ISSUE DATE:	JANUARY 24, 2014
SCALE:	NTS

SHEET TITLE
LANDSCAPE HARDSCAPE DETAILS

SHEET NUMBER
LH-2

COPYRIGHT ADD INC 2011

LIGHTING FIXTURE SCHEDULE - HADDON HALL

TYPE	DESCRIPTION	FIXTURE TYPE, MANUFACTURER & CATALOG #	BULB TYPE & WATTAGE	MOUNTING TYPE & HEIGHT	REMARKS
	STEP LIGHT	LIGMAN U40009-SK-120-L1-SS	2W LED 5K	FLUSH to RISER	
	STRING LIGHT	PRIMUS DECOSTRING	.5W27K	10' HT.	2' O.C. SPACING ON SUSPENDED CABLE SPANS W/ SHADE
	DRIVEWAY LIGHT	LUMIERE 696-6LED2721-120/12-XX	6W LED	FLUSH TO PAVEMENT	
	WALL LIGHT	LIGMAN GINATI LED	3W LED	39" Ht.	SEE PLAN FOR LOCATION & SPACING
	SMALL UPLIGHT	LUMIERE 203-6LED3021-12-BZ/FI203-02	6W LED 3000K NARROW FLOOD	AT GRADE	REMOTE TRANSFORMER "BURIED" IN VEGETATION. TO BE ADJUSTED ON-SITE BY OWNER OR LA
	LARGE UPLIGHT	LUMIERE 203-10LED3021-12-BZ	10W LED 3000K NARROW FLOOD	AT GRADE	REMOTE TRANSFORMER. SEE PLAN FOR LOCATION & SPACING
	PATH LIGHT	TERON 8309K-15833AZT	4.5W LED, 3000K	AT GRADE, 22.75" STEM HEIGHT	REMOTE TRANSFORMER. SEE PLAN FOR LOCATION & SPACING
	TREE LIGHT	LUMIERE 203-6LED3021-12-BZ/FH203-TM01	6W LED 3000K NARROW FLOOD		REMOTE TRANSFORMER W/ TREE STRAP
	LANTERN LIGHT	CUSTOM BOTTLE	FILAMENT		AT TRELLIS AND WEST COURTYARD
	FOUNTAIN LIGHT	AQUASCAPE	LED, 4000 K	TRIPOD	ENTRY COURTYARD FOUNTAIN, WHITE CABLE & FIXTURES IF EXPOSED

LIGHTING: Electrical contractor will be responsible for determining line voltage and system wiring for fixtures specified on Landscape Lighting Drawings and compliance with all local codes.

General Contractor shall stake all junction box locations in the field prior to installation for final adjustment and approval by the Landscape Architect. All large trees and palms must be planted prior to fixture installation.

All electrical lines that fall within planters or planting areas must be located at the perimeters of these areas to allow for he specified planting.

All electrical and irrigation sleeves shall be Schedule 40 PVC, 2" Diameter. See corresponding plans for locations

Landscape lighting circuitry to terminate at handhold. See Note 6, Sheet E1.0.

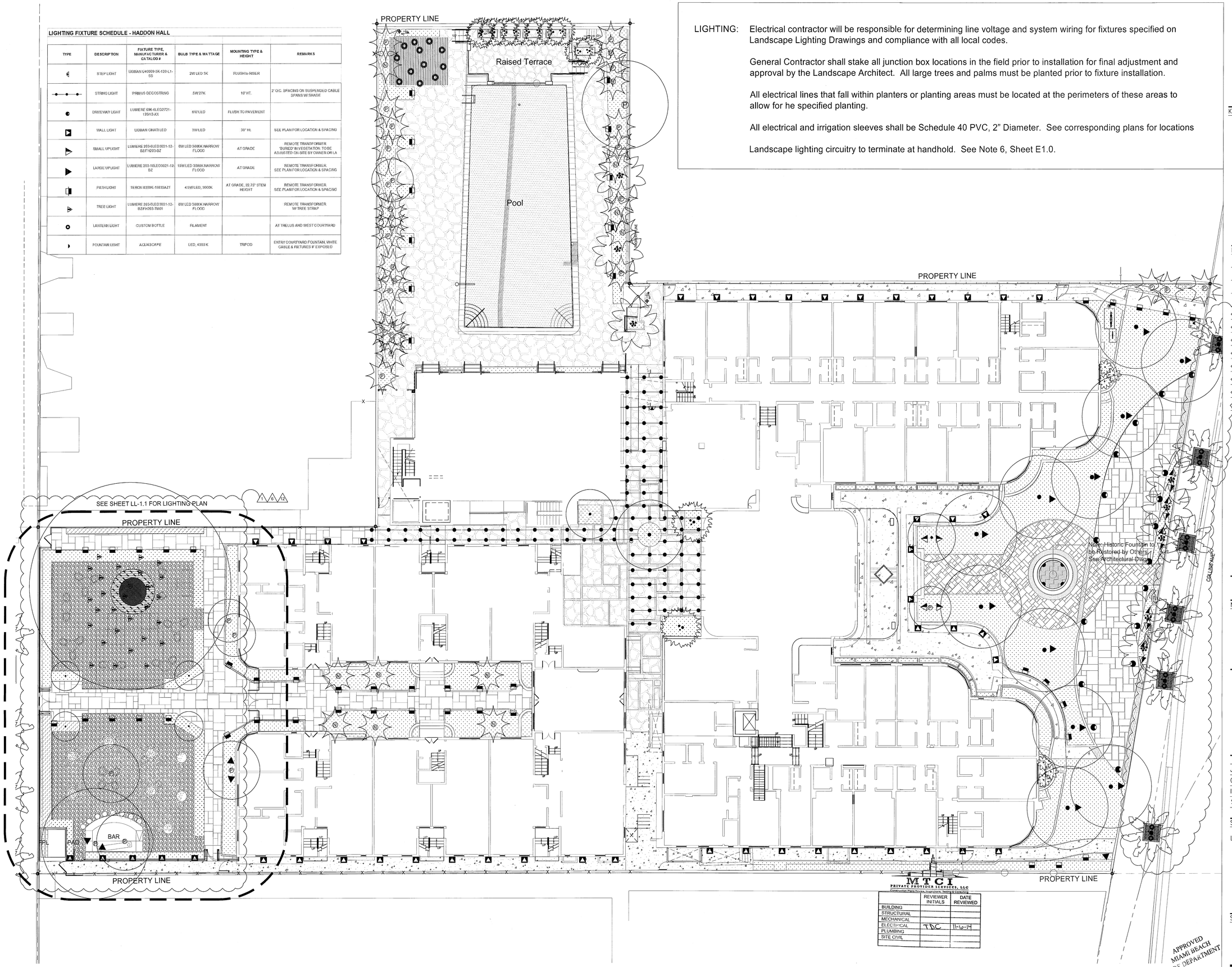

MTCI
PRIVATE PROVIDER SERVICES, LLC
Construction Plans Review, Inspections, Testing & Contracting

	REVIEWER INITIALS	DATE REVIEWED
BUILDING		
STRUCTURAL		
MECHANICAL		
ELECTRICAL	TDC	11-6-14
PLUMBING		
SITE CIVIL		

APPROVED MIAMI BEACH FIRE DEPARTMENT

HADDON HALL
1500 COLLINS AVE
MIAMI BEACH, FL

KEYPLAN N.T.S.

REVISIONS

NO.	DESCRIPTION	ISSUE DATE
1	Progress to 100% CD Set	02/18/2014
2	Permit Review Comments	02/21/2014
6	P&Z Comments	04/18/2014
12	FIRE AND MBD PERMIT COMMENTS	08/21/2014

savinomiller
DESIGN STUDIO
LANDSCAPE ARCHITECTURE | URBAN DESIGN | ARCHITECTURE
12345 NE 6TH AVENUE A NORTH MIAMI, FLORIDA 33161
T: 305.895.9082 F: 305.893.9083 WWW.SAVINOMILLER.COM
AA0002453 LC 0000298

PHASE 1 PERMIT SET

NORTH SEAL

Jonathan Cardello
Lic. # AR93391

ADD Inc Architecture Interiors Planning

One Biscayne Tower
Suite 1670
Two South
Biscayne Boulevard
Miami, Fl 33131
T. 305.482.8700
F. 305.482.8770
www.addinc.com
Lic. # AA26001507

Boston Miami

JOB NUMBER: 13036.00
CHECKED BY:
ISSUE DATE: JANUARY 24, 2014
SCALE: 1" = 10'-0"

SHEET TITLE
LANDSCAPE LIGHTING PLAN

9/9/2014

SHEET NUMBER
LL-1

COPYRIGHT ADD INC 2011

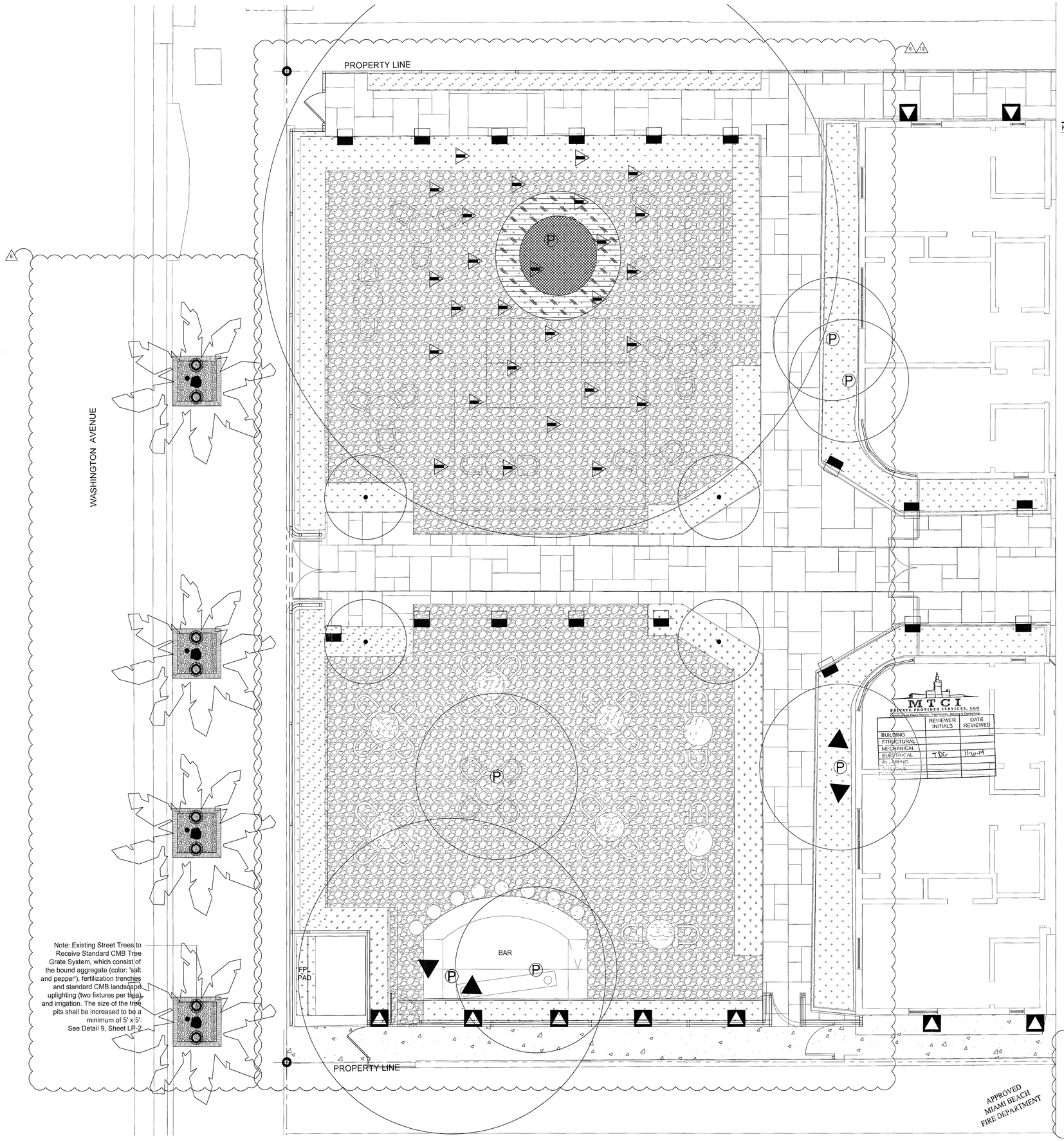

HADDON HALL
1500 COLLINS AVE
MIAMI BEACH, FL

KEYPLAN N.T.S.

REVISIONS

NO.	DESCRIPTION	ISSUE DATE
1	Progress to 100% CD Set	02/18/2014
2	Permit Review Comments	02/21/2014
4	Fire Department Comments	04/01/2014
6	P&Z Comments	04/18/2014
12	FIRE AND MTCI PERMIT COMMENTS	08/21/2014

savinomiller
DESIGN STUDIO
LANDSCAPE ARCHITECTURE | URBAN DESIGN | ARCHITECTURE
12345 NE 6TH AVENUE A NORTH MIAMI, FLORIDA 33161
T: 305.895.9082 F: 305.895.9083 WWW.SAVINOMILLER.COM
AA0002463 LC C000208

PHASE 1 PERMIT SET

NORTH SEAL

Jonathan Cardello
Lic. # AR93391

ADD Inc Architecture Interiors Planning

One Biscayne Tower
Suite 1670
Two South
Biscayne Boulevard
Miami, Fl 33131
T. 305.482.8700
F. 305.482.8770
www.addinc.com
Lic. # AA26001507

Boston Miami

JOB NUMBER: 13036.00
CHECKED BY:
ISSUE DATE: JANUARY 24, 2014
SCALE: 1/4" = 1'-0"

SHEET TITLE
LANDSCAPE LIGHTING PLAN
– CAMPTON COURTYARD

SHEET NUMBER
LL-1.1

COPYRIGHT ADD INC 2011

NOTE: SEE SHEET LP-1.1 FOR REVISED SCHEDULE

HADDON HALL - PLANT-LIST

KEY	QTY.	BOTANICAL/COMMON NAME	SIZE	NOTES
TREES				
LIL	1	Ligustrum lucidum / Tree Ligustrum	12'-14' OA Ht. xSpr. To Match Existing, B&B or Collected Specimen Tree Form Specimen	
MYF	7	Myrcianthes fragrans / Simpson stopper	7'-8' Ht. x 4'-5' Spr, 25 gal.	
PALMS				
ACW	3	Acoelorraphe wrightii Paurotis Palm	14' - 16' OA Ht., Dense, w character heads	
CON	11	Cocos nucifera 'Malayan' / Green Malayan Coconut Palm	8' GW to 18' GW in 2' increments, equal quantities	
RHE	17	Rhapis excelsa / Lady Palm	5' OA Ht., Dense, 7 gal., 36" O.C.	
SAP	2	Sabal palmetto Sabal Palm	10' GW to 20' GW in 2' increments, equal quantities 50% booted trunks, 50% Curving Trunks	
VEW	5	Veitchia winin / Veitchia	12' OA Ht., B&B	
BAMBOO				
BAM	12	Bambusa maligensis Seabreeze Bamboo	12' - 14' OA Ht., Dense, 45 Gal. or larger container	
ACCENT PLANTS				
STR	6	Strelitzia reginae / Bird of Paradise	30" - 36" OA, 7 gal.	
SHRUBS & GROUNDCOVER				
ALM	9	Alocasia macrorhiza / Giant Elephant Ear	4' OA, 7 gal.	
ALP	28	Alpinia purpurata / Red Ginger	30"-36" OA, Full, 36" OC, 3 gal.	
DIV	6	Dietes vegeta White African Iris	12"-18" OA, 1 gal., 24" OC	
MIS	433	Microsorum scolopendria / Wart Fern	12"-18" OA, 1 gal., 18" OC	
MOD	133	Monstera deliciousa Monstera	24"-30" OA, 3 gal., Full, 36" OC	
POM	97	Podocarpus macrophyllus / Japanese Yew	30"-36" Ht., 3 gal, Full., 24" OC	
PSL	61	Psychotria ligustrifolia Dwarf Wild Coffee	18"-24" OA, 3 gal. , 24" OC	
SPP	30	Spathoglottis plicata / Ground Orchid	12"-18" OA, 1 gal., 18" OC	
TRJ	221	Trachelospermum jasminoides / Jasmine	12"-18" OA, 3 gal., 6 runners min.	
TRF	74	Tripsacum floridanum / Florida Gamma Grass	12"-18" Ht., 1 gal., 24" OC	
VEI	1371	Viola hederacea / Australian Violet	6"-8" OA Ht., 1 gal., 18" OC Contact Ken at Plant Creations	

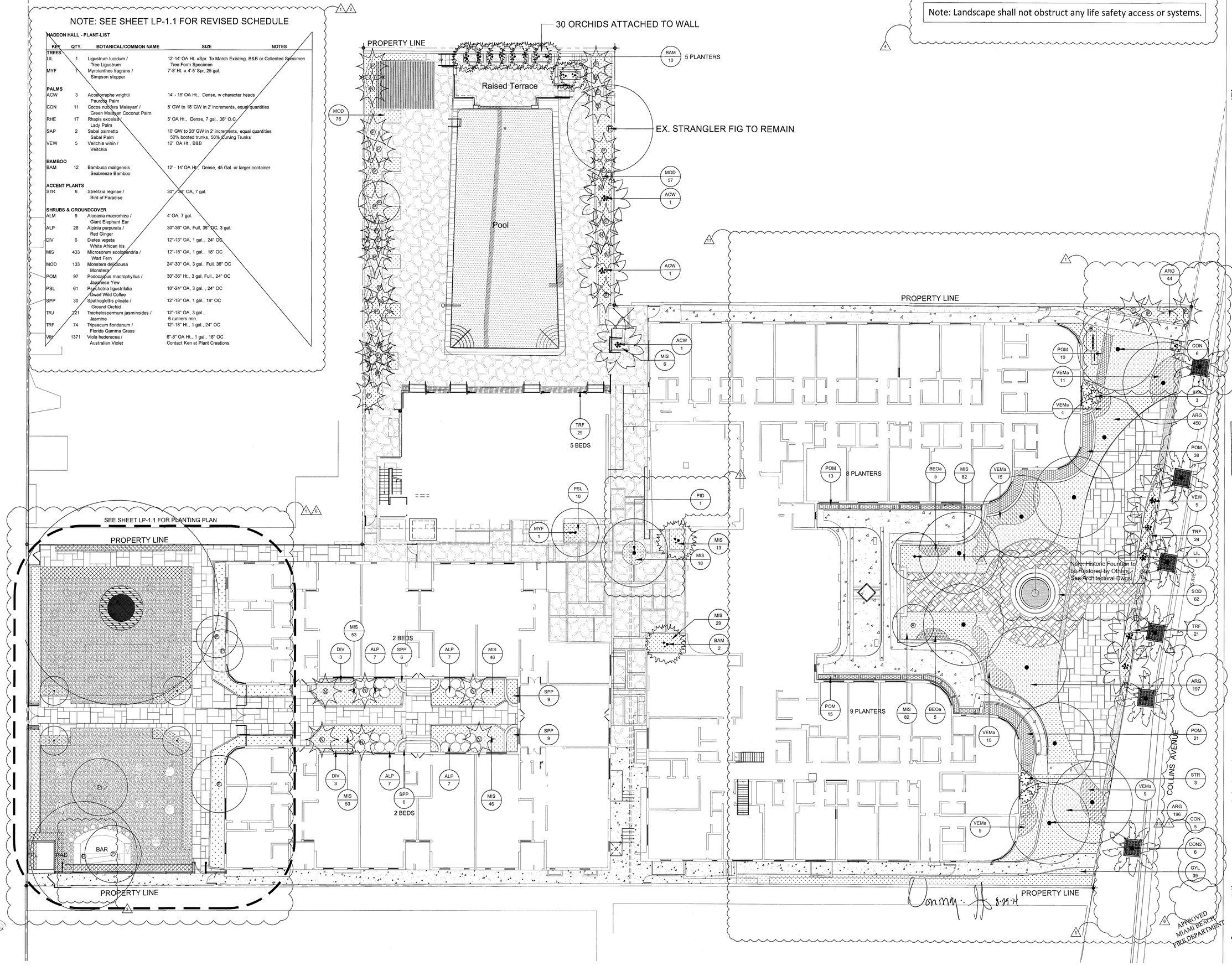

Note: Landscape shall not obstruct any life safety access or systems.

HADDON HALL
1500 COLLINS AVE
MIAMI BEACH, FL

KEYPLAN N.T.S.

REVISIONS

NO.	DESCRIPTION	ISSUE DATE
1	Progress to 100% CD Set	02/18/2014
2	Permit Review Comments	02/21/2014
4	Fire Department Comments	04/01/2014
6	P&Z Comments	04/18/2014
11	P&Z Comments	07/10/2014

MTCI
PRIVATE PROVIDER SERVICES, LLC
Construction Plans Review, Inspections, Testing & Consulting

	REVIEWER INITIALS	DATE REVIEWED
BUILDING		
STRUCTURAL		
MECHANICAL		
ELECTRICAL		
PLUMBING		
SITE CIVIL		

savinomiller
DESIGN STUDIO
LANDSCAPE ARCHITECTURE | URBAN DESIGN | ARCHITECTURE
12345 NE 6TH AVENUE A NORTH MIAMI, FLORIDA 33161
T: 305.895.9082 F: 305.893.9083 WWW.SAVINOMILLER.COM
AA0002463 LC C00298

PHASE 1
PERMIT SET

NORTH SEAL

Jonathan Cardello
Lic. # AR93391

ADD Inc Architecture Interiors Planning

One Biscayne Tower
Suite 1670
Two South
Biscayne Boulevard
Miami, Fl 33131
T. 305.482.8700
F. 305.482.8770
www.addinc.com
Lic. # AA26001507

Boston Miami

JOB NUMBER:	13036.00
CHECKED BY:	
ISSUE DATE:	JANUARY 24, 2014
SCALE:	1" = 10'-0"

SHEET TITLE

LANDSCAPE PLANTING PLAN

SHEET NUMBER

LP-1

COPYRIGHT ADD INC 2011

HADDON HALL - PLANT-LIST				
KEY	**QTY.**	**BOTANICAL/COMMON NAME**	**SIZE**	**NOTES**
TREES				
LIL	1	Ligustrum lucidum /	12'-14' OA Ht. xSpr. To Match Existing, B&B or Collected Specimen	
		Tree Ligustrum	Tree Form Specimen	
MYF	5	Myrcianthes fragrans /	8'-9' Ht. x 4'-5' Spr, 25 gal.	
		Simpson stopper		
PID	1	Pimenta dioica /	10'-12' Ht. x 6'-7' Spr., 45 gal. or B&B	
		Allspice Tree		
PALMS				
ACW	3	Acoelorraphe wrightii	14' - 16' OA Ht., Dense, w character heads	Clear Trunk = GW+2'
		Paurotis Palm		
CON1	11	Cocos nucifera 'Malayan' /	8' GW to 18' GW in 2' increments, equal quantities	Clear Trunk = GW+2'
		Green Malayan Coconut Palm		
CON2	10	Cocos nucifera 'Malayan' /	14' GW Min., Matched	Clear Trunk = GW+2'
		Green Malayan Coconut Palm		
RHE	43	Rhapis excelsa /	5' OA Ht., Dense, 7 gal., 36" O.C.	
		Lady Palm		
VEW	5	Veitchia winin /	12'-14' OA Ht., B&B	Clear Trunk = GW+2'
		Veitchia		
BAMBOO				
BAM	12	Bambusa maligensis	12' - 14' OA Ht., Dense, 45 Gal. or larger container	
		Seabreeze Bamboo		
ACCENT PLANTS				
STR	6	Strelitzia reginae /	30" - 36" OA, 7 gal.	
		Bird of Paradise		
SHRUBS & GROUNDCOVER				
ALM	9	Alocasia macrorhiza /	4' OA, 7 gal.	
		Giant Elephant Ear		
ALP	28	Alpinia purpurata /	30"-36" OA, Full, 36" OC, 3 gal.	
		Red Ginger		
ARG	887	Arachis glabrata	1 gal., 9"-12" OA, 18" OC	
		Perennial Peanut		
BEOa	10	Begonia odorata 'Alba'	3gal, @ 30"OC	
		White Angel Begonia		
DIV	6	Dietes vegeta	12"-18" OA, 1 gal., 24" OC	
		White African Iris		
GYL	39	Gymnanthes lucida/	24"-30" OA, 7 gal, Full, 36" OC	
		Crabwood, Alt. Rapaneu punctata		
MIS	700	Microsorum scolopendria /	12"-18" OA, 1 gal., 18" OC	
		Wart Fern		
MOD	133	Monstera deliciousa	24"-30" OA, 3 gal., Full, 36" OC	
		Monstera		
POM	97	Podocarpus macrophyllus /	30"-36" Ht., 3 gal, Full., 24" OC	
		Japanese Yew		
PSL	87	Psychotria ligustrifolia	18"-24" OA, 3 gal. , 24" OC	
		Dwarf Wild Coffee		
SPP	30	Spathoglottis plicata /	12"-18" OA, 1 gal., 18" OC	
		Ground Orchid		
TRF	74	Tripsacum floridanum /	12"-18" Ht., 1 gal., 24" OC	
		Florida Gamma Grass		
VEMa	54	Verbena maritima	1 gal., 36" OC	
		Beach Verbena		
SOD				
ZOY	62	Zoysia 'Empire'	palettes	
	SF	Zoysia Sod		
GRAVEL / STONE BORDER				
GRA		Crushed, Decomposed Granite	Concrete Screening 2" depth + 1" depth Decomposed	
	CY		Granite & 3/8" - Granite gravel	

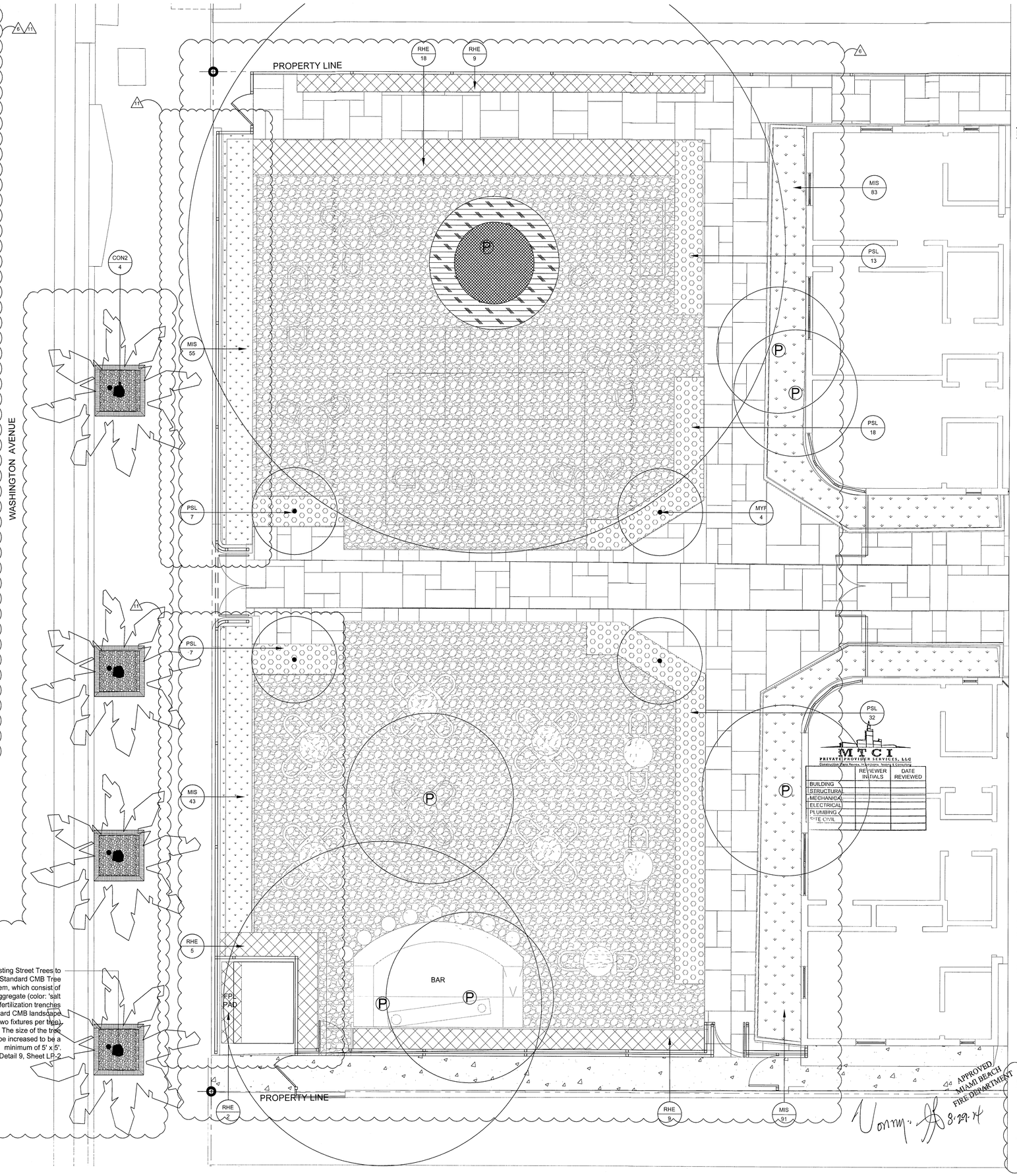

HADDON HALL
1500 COLLINS AVE
MIAMI BEACH, FL

KEYPLAN N.T.S.

REVISIONS

NO.	DESCRIPTION	ISSUE DATE
1	Progress to 100% CD Set	02/18/2014
2	Permit Review Comments	02/21/2014
4	Fire Department Comments	04/01/2014
6	P&Z Comments	04/18/2014
11	P&Z Comments	07/10/2014

savinomiller DESIGNSTUDIO
LANDSCAPE ARCHITECTURE | URBAN DESIGN | ARCHITECTURE
12345 NE 4TH AVENUE A NORTH MIAMI, FLORIDA 33161
T: 305.895.9082 F: 305.895.9083 WWW.SAVINOMILLER.COM
AA0007463 LC C00208

PHASE 1 PERMIT SET

NORTH SEAL

Jonathan Cardello
Lic. # AR93391

ADD Inc Architecture Interiors Planning

One Biscayne Tower
Suite 1670
Two South
Biscayne Boulevard
Miami, Fl 33131
T. 305.482.8700
F. 305.482.8770
www.addinc.com
Lic. # AA26001507

Boston Miami

JOB NUMBER: 13036.00
CHECKED BY:
ISSUE DATE: JANUARY 24, 2014
SCALE: 1/4" = 1'-0"

SHEET TITLE
LANDSCAPE PLANTING PLAN – CAMPTON COURTYARD

SHEET NUMBER
LP-1.1

COPYRIGHT ADD INC 2011

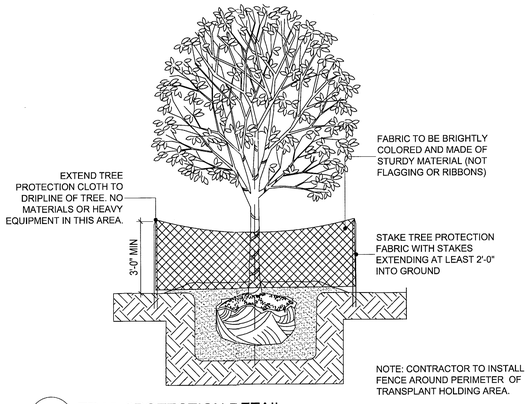

1 TREE PROTECTION DETAIL
NTS

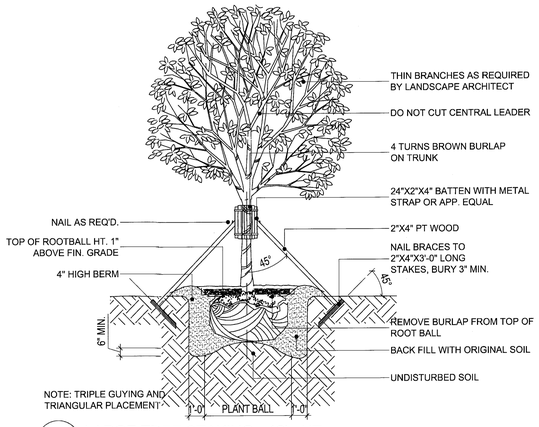

2 LARGE TREE STAKING - 12'+ HT.
NTS

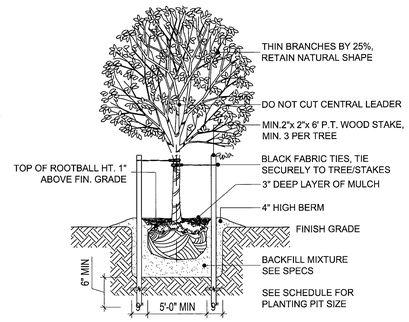

3 SMALL TREE GUYING DETAIL
NTS

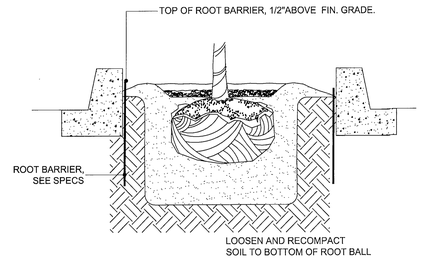

4 ROOT BARRIER, TYP.
NTS

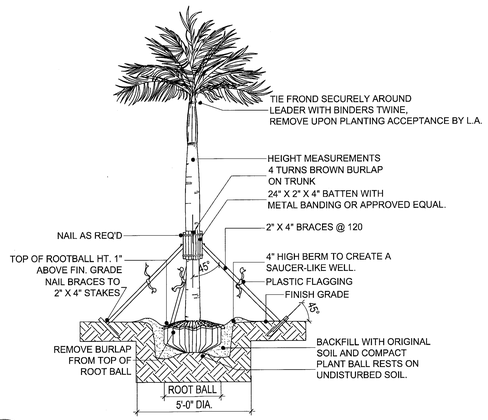

5 LARGE PALM STAKING DETAIL
NTS

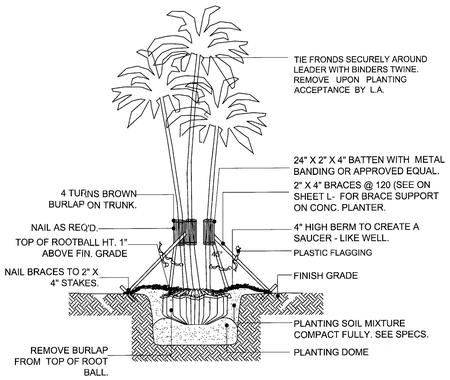

6 PALM STAKING DETAIL - MULTI-TRUNK
NTS

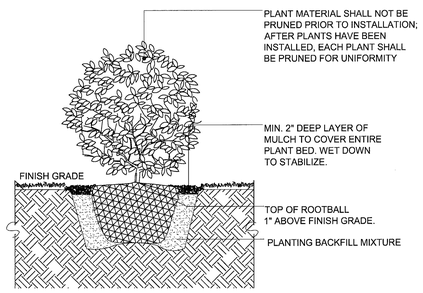

7 SMALL SHRUBS DETAIL
NTS

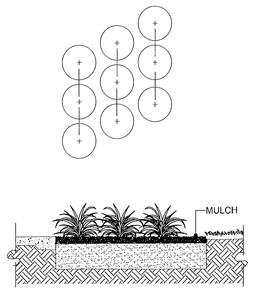

8 GROUNDCOVER SPACING DETAIL
NTS

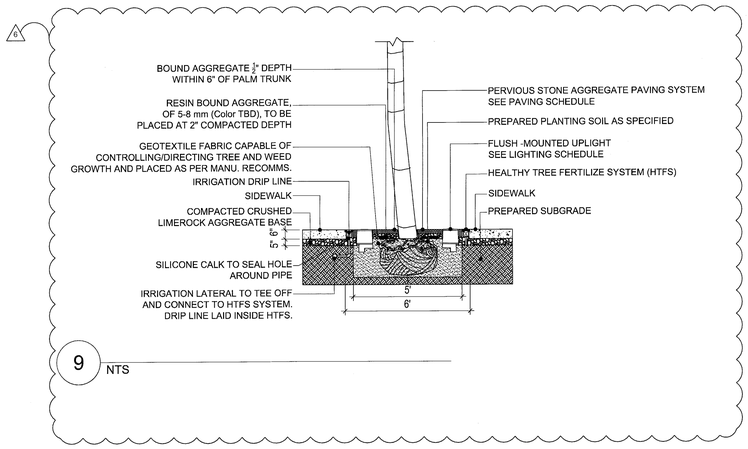

9
NTS

MTCI
PRIVATE PROVIDER SERVICES, LLC
Construction Plans Review, Inspections, Testing & Consulting

	REVIEWER INITIALS	DATE REVIEWED
BUILDING		
STRUCTURAL		
MECHANICAL		
ELECTRICAL		
PLUMBING		
SITE CIVIL		

APPROVED MIAMI BEACH FIRE DEPARTMENT 8-29-14

HADDON HALL
1500 COLLINS AVE
MIAMI BEACH, FL

KEYPLAN N.T.S.

REVISIONS

NO.	DESCRIPTION	ISSUE DATE
6	P&Z Comments	04/18/2014

savinomiller
DESIGNSTUDIO
LANDSCAPE ARCHITECTURE | URBAN DESIGN | ARCHITECTURE
12345 NE 6TH AVENUE A NORTH MIAMI, FLORIDA 33161
T: 305.895.9082 F: 305.895.9083 WWW.SAVINOMILLER.COM
AA0002463 LC C00208

PHASE 1
PERMIT SET

SEAL

Jonathan Cardello
Lic. # AR93391

ADD Inc Architecture Interiors Planning
One Biscayne Tower
Suite 1670
Two South
Biscayne Boulevard
Miami, Fl 33131
T. 305.482.8700
F. 305.482.8770
www.addinc.com
Lic. # AA26001507
Boston Miami

JOB NUMBER: 13036.00
CHECKED BY:
ISSUE DATE: JANUARY 24, 2014
SCALE: NTS

SHEET TITLE
LANDSCAPE PLANTING DETAILS

SHEET NUMBER
LP-2

COPYRIGHT ADD INC 2011

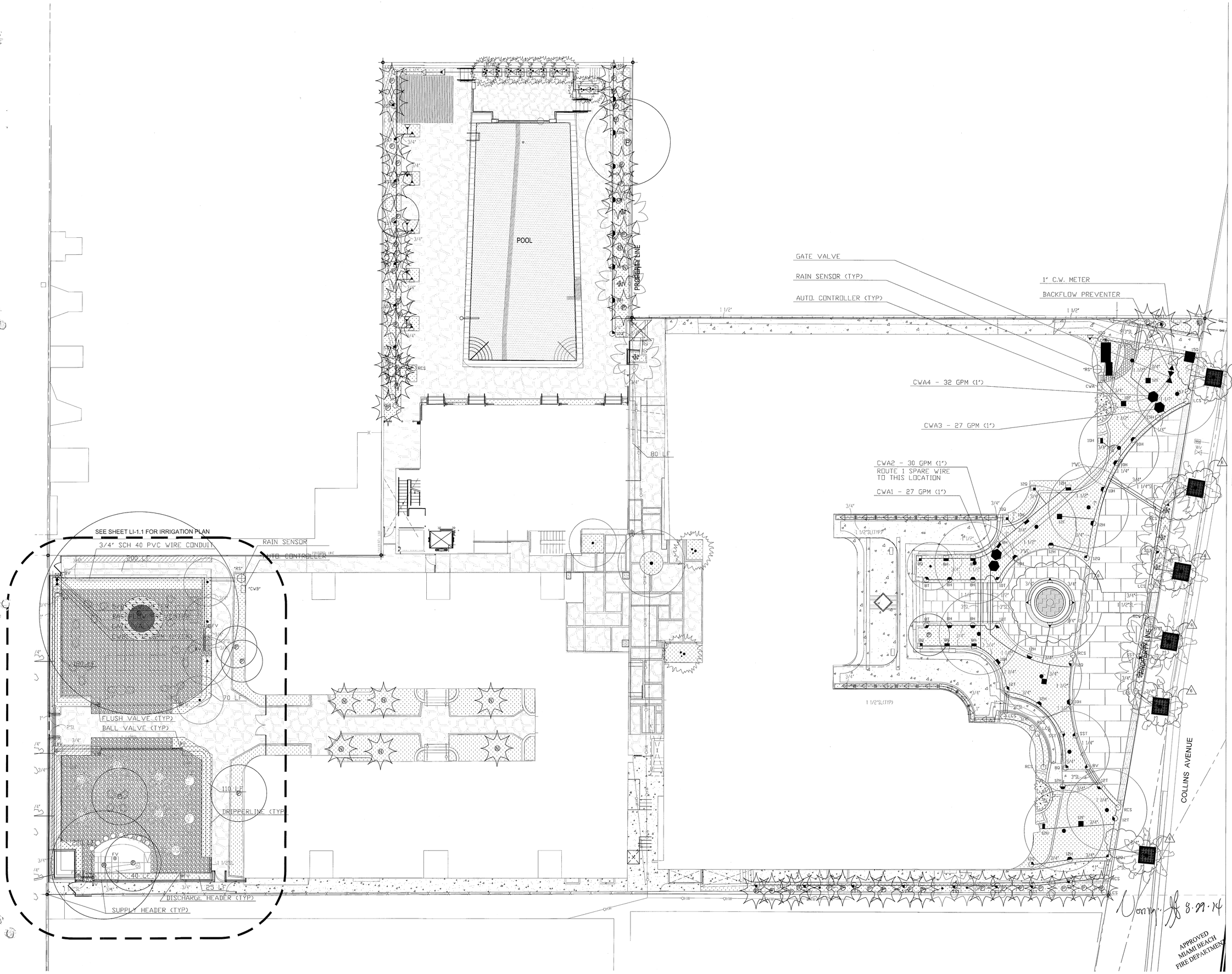

HADDON HALL
1500 COLLINS AVE
MIAMI BEACH, FL

KEYPLAN N.T.S.

REVISIONS

NO.	DESCRIPTION	ISSUE DATE

MTCI
PRIVATE PROVIDER SERVICES, LLC
Construction Plans Review, Inspections, Testing & Consulting

	REVIEWER INITIALS	DATE REVIEWED
BUILDING		
STRUCTURAL		
MECHANICAL		
ELECTRICAL		
PLUMBING		11/10/14
SITE CIVIL		

savinomiller
DESIGNSTUDIO
LANDSCAPE ARCHITECTURE I URBAN DESIGN I ARCHITECTURE
12345 NE 6TH AVENUE A NORTH MIAMI, FLORIDA 33161
T: 305.895.9082 F: 305.895.9083 WWW.SAVINOMILLER.COM
AA0002493 LC C00208

PHASE 1
PERMIT SET

NORTH SEAL

Jonathan Cardello
Lic. # AR93391

ADD Inc Architecture Interiors Planning

One Biscayne Tower
Suite 1670
Two South
Biscayne Boulevard
Miami, Fl 33131
T. 305.482.8700
F. 305.482.8770
www.addinc.com
Lic. # AA26001507

Boston Miami

JOB NUMBER:	13036.00
CHECKED BY:	
ISSUE DATE:	JANUARY 24, 2014
SCALE:	1" = 10'-0"

SHEET TITLE

LANDSCAPE IRRIGATION PLAN

#866
5/21/2014

SHEET NUMBER

LI-1

COPYRIGHT ADD INC 2011

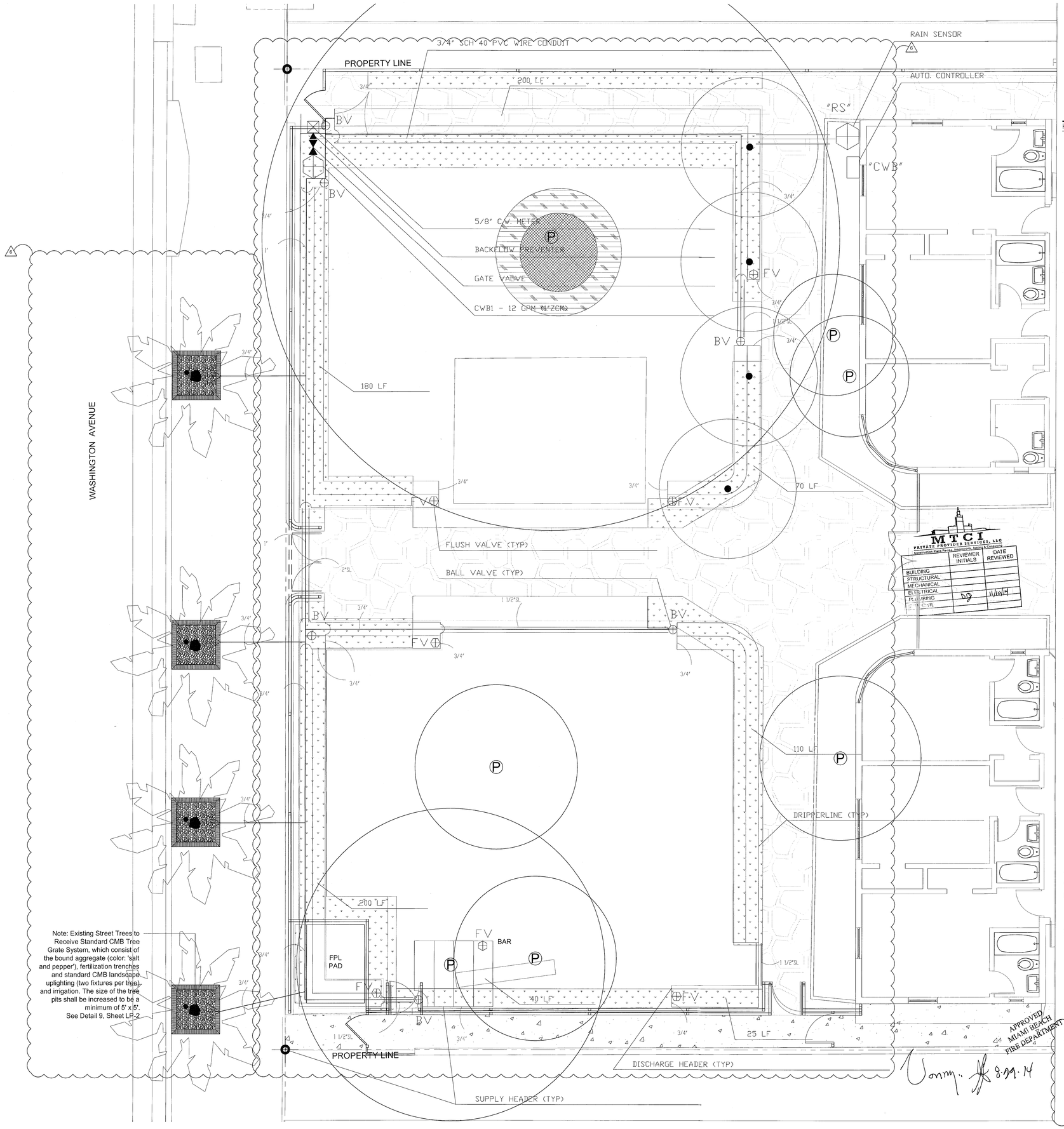

Note: Existing Street Trees to Receive Standard CMB Tree Grate System, which consist of the bound aggregate (color: 'salt and pepper'), fertilization trenches and standard CMB landscape uplighting (two fixtures per tree) and irrigation. The size of the tree pits shall be increased to be a minimum of 5' x 5'. See Detail 9, Sheet LP-2

MTCI
PRIVATE PROVIDER SERVICES, LLC
Construction Plans Review, Inspections, Training & Consulting

	REVIEWER INITIALS	DATE REVIEWED
BUILDING		
STRUCTURAL		
MECHANICAL		
ELECTRICAL		
PLUMBING	DG	11/20/14
CIVIL		

APPROVED MIAMI BEACH FIRE DEPARTMENT
8.29.14

HADDON HALL
1500 COLLINS AVE
MIAMI BEACH, FL

KEYPLAN N.T.S.

REVISIONS

NO.	DESCRIPTION	ISSUE DATE
1	Progress to 100% CD Set	02/18/2014
2	Permit Review Comments	02/21/2014
4	Fire Department Comments	04/01/2014
6	P&Z Comments	04/18/2014

savinomiller
DESIGN STUDIO
LANDSCAPE ARCHITECTURE | URBAN DESIGN | ARCHITECTURE
12345 NE 6TH AVENUE A NORTH MIAMI, FLORIDA 33161
T: 305.895.9082 F: 305.895.9083 WWW.SAVINOMILLER.COM
AA0002469 LC C000208

PHASE 1 PERMIT SET

NORTH SEAL

Jonathan Cardello
Lic. # AR93391

ADD Inc Architecture Interiors Planning

One Biscayne Tower
Suite 1670
Two South
Biscayne Boulevard
Miami, Fl 33131
T. 305.482.8700
F. 305.482.8770
www.addinc.com
Lic. # AA26001507

Boston Miami

JOB NUMBER: 13036.00
CHECKED BY:
ISSUE DATE: JANUARY 24, 2014
SCALE: 1/4" = 1'-0"

SHEET TITLE
LANDSCAPE IRRIGATION PLAN – CAMPTON COURTYARD

SHEET NUMBER
LI-1.1

COPYRIGHT ADD INC 2011

LEGEND

SYMBOL	MODEL NO.	DESCRIPTION	* EST. QUANTITY
▲	PA-8S-5Q-B	RAIN BIRD STREAM BUBBLER	17
△	PA-8S-5CST-B	RAIN BIRD STREAM BUBBLER	36
8Q	PA-8S-8Q	RAIN BIRD SHRUB SPRAY	02
8H	PA-8S-8H	RAIN BIRD SHRUB SPRAY	05
8F	PA-8S-8F	RAIN BIRD SHRUB SPRAY	01
10Q	PA-8S-10Q	RAIN BIRD SHRUB SPRAY	01
10H	PA-8S-10H	RAIN BIRD SHRUB SPRAY	03
12Q	PA-8S-12Q	RAIN BIRD SHRUB SPRAY	01
12H	PA-8S-12H	RAIN BIRD SHRUB SPRAY	02
12F	PA-8S-12F	RAIN BIRD SHRUB SPRAY	03
15H	PA-8S-15H	RAIN BIRD SHRUB SPRAY	01
8Q	1812-8Q	RAIN BIRD 12" POP=UP SPRAY	02
8T	1812-8T	RAIN BIRD 12" POP=UP SPRAY	02
8H	1812-8H	RAIN BIRD 12" POP=UP SPRAY	04
10Q	1812-10Q	RAIN BIRD 12" POP=UP SPRAY	03
10T	1812-10T	RAIN BIRD 12" POP=UP SPRAY	01
10H	1812-10H	RAIN BIRD 12" POP=UP SPRAY	12
12Q	1812-12Q	RAIN BIRD 12" POP=UP SPRAY	04
12T	1812-12T	RAIN BIRD 12" POP=UP SPRAY	04
12H	1812-12H	RAIN BIRD 12" POP=UP SPRAY	06
RCS	1812-15RCS	RAIN BIRD 12" POP=UP SPRAY	11
LCS	1812-15LCS	RAIN BIRD 12" POP=UP SPRAY	09
SST	1812-15SST	RAIN BIRD 12" POP=UP SPRAY	20
15Q	1812-15Q	RAIN BIRD 12" POP=UP SPRAY	02
15T	1812-15T	RAIN BIRD 12" POP=UP SPRAY	01
15H	1812-15H	RAIN BIRD 12" POP-UP SPRAY	02
—×—×—×—	TLCV912	TECHLINE DRIP PIPE	900 LF
⊕FV	TLFV	TECHLINE FLUSH VALVE	09
NOT SHOWN	TLS6	TECHLINE SOIL STAPLES	AS REQUIRED
NOT SHOWN	TL ACC	TECHLINE ACCESSORIES	AS REQUIRED
CW	ESP-4M	RAIN BIRD AUTO. CONTROLLER	02
⊕	RSD-BEX	RAIN BIRD RAIN SENSOR	02
⬢	100 PEB	RAIN BIRD 1" SOLENOID VALVE	04
⊕	XCZ-100-PRB-COM	RAIN BIRD ZONE CONTROL KIT	01
▼	765 SERIES	FEBCO BACKFLOW PREVENTER	
		1"	01
		1 1/2"	01
NOT SHOWN	#14AWG	PAIGE THHN WIRE	AS REQUIRED
NOT SHOWN		SCH 40 GALVANIZED STEEL	AS REQUIRED
		SCH 40 PVC	AS REQUIRED
—•••—		MAIN LINE	
———		LATERALS	
———		SUPPLY HEADERS	
———		DISCHARGE HEADERS	
NOT SHOWN		SPRINKLER RISERS	
NOT SHOWN		PVC FITTINGS	
• • • • •		WIRE CONDUIT	
		ISOLATION VALVES	
▶◀		GATE TYPE	02
⊕BV		BALL TYPE	06
⬢,⊕,⊕FV,▶◀,⊕BV		VALVE BOX	20
CW		GROUNDING LOCATION	02
⊠		CITY WATER METER	02

NOTE: ABOVE QUANTITIES ARE FOR COMPARISON ONLY. CONTRACTOR SHALL VERIFY PRIOR TO SUBMITTING BID.

ZONE SUMMARY CHART

CONTROLLER CWA

STA NO.	VALVE	SPRINKLER TYPE	VALVE SIZE	WATER DEMAND	RUN *TIME	WEEKLY USAGE
1	CWA1	SPRAY	1"	27 GPM	40 MIN/WK	1,080 GAL/WK
2	CWA2	SPRAY	1"	30 GPM	40 MIN/WK	1,200 GAL/WK
3	CWA3	SPRAY	1"	27 GPM	40 MIN/WK	1,080 GAL/WK
4	CWA4	SPRAY	1"	32 GPM	40 MIN/WK	1,280 GAL/WK
					160 MIN/WK	4,640 GAL/WK

CONTROLLER CWB

STA NO.	VALVE	SPRINKLER TYPE	VALVE SIZE	WATER DEMAND	RUN *TIME	WEEKLY USAGE
1	CWB1	DRIP	1"ZCK	12 GPM	100 MIN/WK	1,200 GAL/WK
2-4	SPARE					
					100 MIN/WK	1,200 GAL/WK

*TO APPLY 1.0 IN/WK.

IRRIGATION NOTES & SPECIFICATIONS

AUTOMATIC IRRIGATION SYSTEM	
WATER DEMAND / ZONE	REFER TO PLAN
WATER SOURCE	CITY WATER METERS
PRESSURE REQUIRED	50 PSI

GENERAL

IRRIGATION SHALL BE INSTALLED IN ACCORDANCE WITH LOCAL CODES, CONTRACT DRAWINGS, CONTRACT SPECIFICATIONS, AND APPENDIX "F" OF THE FLORIDA BUILDING CODE.

IRRIGATION DESIGN BASED ON "LANDSCAPE PLAN" DATED JANUARY 27, 2014. CONTRACTOR SHALL REFER TO THIS PLAN TO COORDINATE SPRINKLER LOCATIONS AND PIPE ROUTING WITH NEW AND EXISTING PLANT LOCATIONS.

THIS PLAN SHALL BE USED AS A GUIDE ONLY. IRRIGATION SHALL BE INSTALLED TO MATCH ON SITE CONDITIONS AND TO OVERCOME THE INHERENT INACCURACIES THAT RESULT WHEN DESIGNING FROM BASE PLANS SCALED AT 1" = 16' .

THIS SITE SHALL BE IRRIGATED WITH TWO INDEPENDENT SYSTEMS. THE WATER SOURCE FOR EACH SYSTEM SHALL BE A CITY WATER METER. BACKFLOW PREVENTION SHALL BE INSTALLED IN EACH SYSTEM TO MEET CODE REQUIREMENTS FOR CROSS-CONNECTION CONTROL. A PRESSURE VACUUM BREAKER SHALL BE INSTALLED PER SYSTEM.

THIS IRRIGATION HAS BEEN DESIGNED AS A TYPICAL BLOCK VALVE TYPE USING NETAFIM DRIP EQUIPMENT AND RAIN BIRD SPRINKLERS, IN-LINE VALVES AND CONTROL SYSTEM. A RAIN SENSOR SHALL BE INSTALLED TO CONSERVE WATER.

IRRIGATION SHALL BE INSTALLED AND MAINTAINED TO MINIMIZE UNDESIRABLE OVERTHROW ONTO PAVEMENT, SIDEWALKS, AND BUILDINGS.

CONTRACTOR SHALL VISIT THE SITE TO BECOME FAMILIAR WITH SITE CONDITIONS, AND STUDY THE PLANS FOR ADDITIONAL INFORMATION.

TO ENSURE PROPER OPERATION, SOURCE SIZES, VALVE SIZES, ZONE CAPACITIES, SPRINKLER AND DRIPPERLINE SPACING, PIPE AND WIRE SIZES, AND INSTALLATION NOTES AND DETAILS SHALL BE FOLLOWED AS SHOWN.

PIPING

PIPE ROUTING IS SCHEMATIC ONLY AND SHALL BE ADJUSTED FOR ON SITE CONDITIONS.

PIPE SHALL BE INSTALLED IN ACCORDANCE WITH LOCAL CODES, SECTION "F" OF THE FLORIDA BUILDING CODE, AND PIPE MANUFACTURER'S INSTRUCTIONS.

PIPE ROUTED UNDER HARDSCAPED AREAS SHALL BE SLEEVED IN SCH 40 PVC. EACH SLEEVE SHALL BE: (1) BURIED TO A MINIMUM DEPTH OF 24", (2) TWO PIPE SIZES LARGER THAN CARRIER PIPE, AND (3) EXTENDED 3' BEYOND HARDSCAPED AREA ON EACH END. CONTRACTOR SHALL REFER TO LOCATION OF EXISTING SLEEVES.

PIPE INSTALLED ABOVE GRADE AT EACH BACKFLOW PREVENTER SHALL BE SCH 40 GALVANIZED STEEL. ALL OTHER PIPE AND FITTINGS SHALL BE SCH 40 TYPE 1120 PVC.

PIPE SIZED TO LIMIT FLOW VELOCITIES TO 5 FEET/SECOND AND TO LIMIT FRICTION LOSS IN THE PIPING NETWORK.

PIPE SHALL BE INSTALLED AT SUFFICIENT DEPTH BELOW GROUND TO PROTECT IT FROM HAZARD SUCH AS VEHICULAR TRAFFIC OR ROUTINE OCCURRENCES WHICH OCCUR IN THE NORMAL USE AND MAINTENANCE OF THE PROPERTY. DEPTHS OF COVER SHALL MEET OR EXCEED SCS CODE 430-DD. REFER TO THE APPLICABLE DETAIL FOR ADDITIONAL INFORMATION.

BACKFILL SHALL BE OF SUITABLE MATERIAL, FREE OF ROCKS, STONES, AND OTHER DEBRIS THAT WOULD DAMAGE IRRIGATION SYSTEM COMPONENTS.

GATE AND BALL VALVES SHALL BE INSTALLED FOR ISOLATION. EACH VALVE SHALL BE TO LINE SIZE AND INSTALLED IN A VALVE BOX. POROUS MATERIAL SHALL BE INSTALLED PER BOX TO PROMOTE DRAINAGE.

EACH BACKFLOW PREVENTER SHALL BE INSTALLED IN ACCORDANCE WITH LOCAL CODES AND SHALL BE LOCATED TO BE CONCEALED FROM VIEW.

SPRINKLERS

SPRINKLER LOCATIONS ARE SCHEMATIC ONLY AND SHALL BE ADJUSTED FOR LANDSCAPING, FENCES, SITE LIGHTING, PREVAILING WIND, MOUNDING, ETC., TO ENSURE PROPER COVERAGE WITH MINIMAL UNDESIRABLE OVERTHROW. A PRIME OBJECTIVE SHALL BE TO ELIMINATE OVERTHROW ONTO PAVEMENT, SIDEWALKS, AND BUILDINGS.

SPRAY HEADS SHALL BE RAIN BIRD 1800 SERIES. SIX INCH POP-UP TYPE SHALL BE INSTALLED IN AREAS LANDSCAPED WITH SOD AND MULCH, TWELVE INCH POP-UP TYPE SHALL BE INSTALLED IN AREAS LANDSCAPED WITH GROUND COVER AND LOW SHRUBS, SHRUB HEADS SHALL BE INSTALLED IN AREAS LANDSCAPED WITH TALL SHRUBS, AND BUBBLERS SHALL BE INSTALLED IN NARROW LANDSCAPED AREAS.

POP-UP TYPE LOCATED IN SOD, MULCH, AND GROUND COVERS SHALL BE INSTALLED ON FLEXIBLE SWING JOINTS CONSISTING OF THICKWALLED POLY PIPE AND 1/2" INSERT ELBOWS.

POP-UP TYPE LOCATED IN SHRUBS SHALL BE INSTALLED ON 1/2" SCH 40 PVC RISERS TO A HEIGHT SO SPRINKLERS ARE CONCEALED FROM VIEW EXCEPT DURING USE.

SHRUB TYPE AND BUBBLERS SHALL BE INSTALLED ON 1/2" SCH 40 PVC RISERS. SHRUB HEADS SHALL BE INSTALLED A STANDARD HEIGHT OF 6" ABOVE PLANTS AND SHALL BE INSTALLED WITHIN PLANTS TO BE CONCEALED FROM VIEW. BUBBLERS SHALL BE INSTALLED AT THE BASE OF PLANTS FOR LOW LEVEL WATERING. RISERS SHALL BE PAINTED FLAT BLACK TO BE LESS VISIBLE.

EACH SPRAY HEAD SHALL BE EQUIPPED WITH THE APPROPRIATE SPRAY NOZZLE.

ADJUSTMENT FEATURES OF SPRINKLERS SPECIFIED SHALL BE UTILIZED TO ENSURE PROPER COVERAGE WITH MINIMAL UNDESIRABLE OVERTHROW. LOW ANGLE, FLAT SPRAY, AND ADJUSTABLE ARC NOZZLES SHALL BE USED TO MINIMIZE OVERTHROW.

SPRINKLERS LOCATED ADJACENT TO HARDSCAPED AREAS SHALL BE INSTALLED AWAY FROM HARDSCAPED AREAS TO MINIMIZE OVERTHROW AND THE CHANCE OF DAMAGE BY VEHICLES, PEDESTRIANS, AND LAWN MAINTENANCE PRESONNEL. AS A GENERAL RULE, 6" POP-UP SPRAY HEADS SHALL BE INSTALLED IN 4", SHRUB HEADS AND 12" POP-UP SPRAY HEADS SHALL BE INSTALLED IN 12".

DRIP IRRIGATION

DRIP IRRIGATION SHALL BE INSTALLED IN SELECTED PLANTED AREAS.

DRIP IRRIGATION SHALL CONSIST OF TECHLINE NETAFIM DRIPPERLINE, FLUSH VALVES, SOIL STAPLES, AND ACCESSORIES. DRIP IRRIGATION SHALL BE OPERATED WITH A RAIN BIRD ZONE CONTROL KIT.

DRIP PIPE WITH EMITTERS 12" ON-CENTER WHICH DELIVER 0.9 GPH SHALL BE INSTALLED IN ROWS SPACED A MAXIMUM OF 24 INCHES ON-CENTER IN AREAS LANDSCAPED WITH GROUND COVERS AND SHRUBS.

DRIP EQUIPMENT SHALL BE INSTALLED IN ACCORDANCE WITH MANUFACTURER'S INSTRUCTIONS AND UNDER THE SUPERVISION OF THE LANDSCAPE ARCHITECT.

LINE FLUSH VALVES SHALL BE INSTALLED AS RECOMMENDED FOR MAINTENANCE.

QUANTITIES OF TECHLINE INDICATED ON THE PLAN ARE VERY APPROXIMATE. CONTRACTOR SHALL SUBMIT A PER FOOT UNIT PRICE TO INSTALL TECHLINE SO ADDITIONS AND DELETIONS TO THE CONTRACT MAY BE MADE AT A PRE-DETERMINED PRICE.

CONTROL SYSTEM

CONTROL SYSTEM SHALL BE A RAIN BIRD ESP SERIES ELECTRIC TYPE. ONE 4 STATION CONTROLLER WITH RAIN SENSOR SHALL BE INSTALLED PER SYSTEM.

CONTROLLERS SHALL BE INSTALLED IN ACCORDANCE WITH LOCAL CODES AND MANUFACTURER'S INSTRUCTIONS. PROPER GROUNDING EQUIPMENT SHALL BE PROVIDED.

CONTROLLERS LOCATION SHALL BE APPROVED BY THE OWNER'S REPRESENTATIVE. A 110 VAC ELECTRIC SOURCE IS REQUIRED.

CONTROL LINES FROM AUTOMATIC CONTROLLERS TO IN-LINE AUTOMATIC VALVES SHALL BE #14 AWG DIRECT BURIAL UF TYPE WHICH SHALL BE: (1) INSTALLED IN ACCORDANCE WITH LOCAL CODES, (2) INSTALLED IN SCH 40 PVC WIRE CONDUIT, (3) BURIED TO A MINIMUM DEPTH OF 15", (4) COLORED CODED TO FACILITATE TROUBLESHOOTING, AND (5) SPLICED MOSTLY AT VALVE LOCATIONS. SPLICES SHALL BE MADE WATERPROOF USING APPROVED METHODS. SPARE WIRES SHALL BE ROUTED FROM THE CONTROLLER IN ALL DIRECTIONS TO THE FARTHEST VALVES CONTROLLED.

AN INDIVIDUAL CONTROL WIRE SHALL BE ROUTED TO EACH VALVE AND VALVES WHICH OPERATE SIMULTANEOUSLY SHALL BE TEED TOGETHER AT THE CONTROLLER.

AUTOMATIC VALVE LOCATIONS ARE SCHEMATIC ONLY AND SHALL BE ADJUSTED FOR ON SITE CONDITIONS. EACH VALVE SHALL BE INSTALLED IN A VALVE BOX. A MINIMUM OF ONE CUBIC FOOT OF GRAVEL SHALL BE PROVIDED PER BOX TO PROMOTE DRAINAGE.

EACH RAIN SENSOR SHALL BE INSTALLED IN ACCORDANCE WITH MANUFACTURER'S INSTRUCTIONS.

TIMING AND PRECIPITATION

TIMING OF EACH STATION SHALL BE SET IN THE FIELD TO MATCH LOCAL REQUIREMENTS. REFER TO ZONE SUMMARY CHART FOR RECOMMENDED RUN TIMES TO APPLY 1.0 INCHES/WEEK.

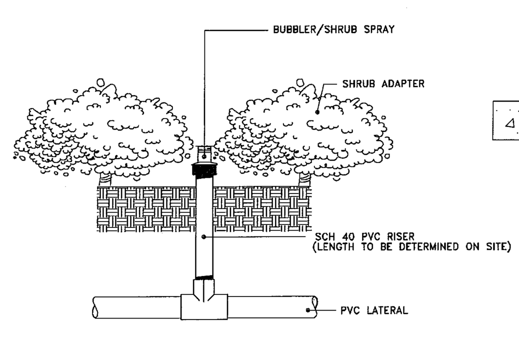

SPRINKLER DETAIL (NTS)
BUBBLER/SHRUB SPRAY INSTALLED AT THE BASE OF PLANTS FOR LOW LEVEL WATERING

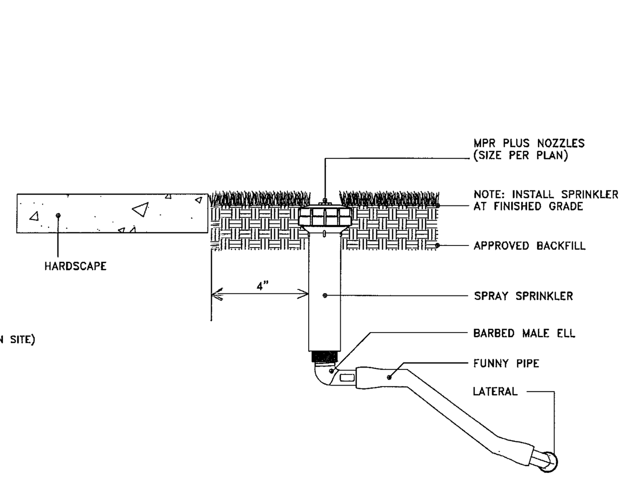

SPRINKLER DETAIL (NTS)
POP-UP SPRAY ON POLY PIPE SWING JOINT LOCATED IN SOD OR MULCH

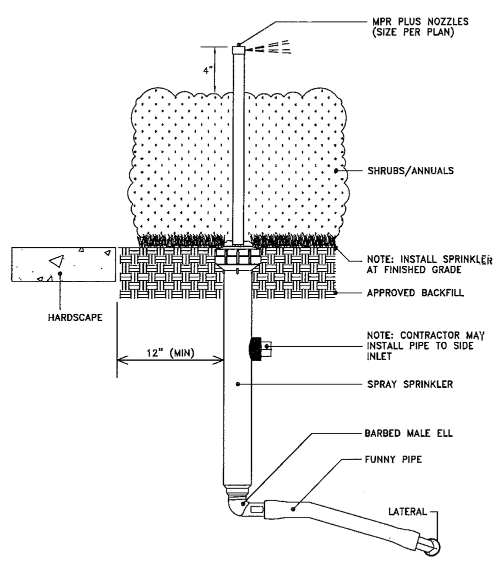

SPRINKLER DETAIL (NTS)
12" POP-UP SPRAY ON POLY PIPE SWING JOINT LOCATED IN PLANTS MAINTAINED TO A MAXIMUM HEIGHT OF 8".

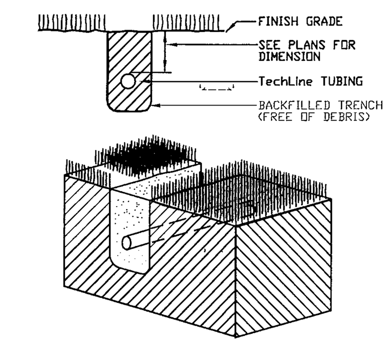

TRENCHING DETAIL
NOT TO SCALE

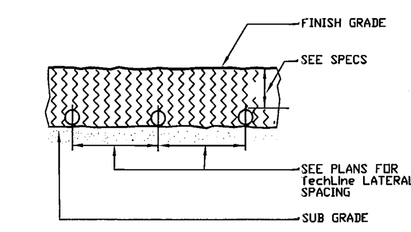

SUBGRADE INSTALLATION
NOT TO SCALE

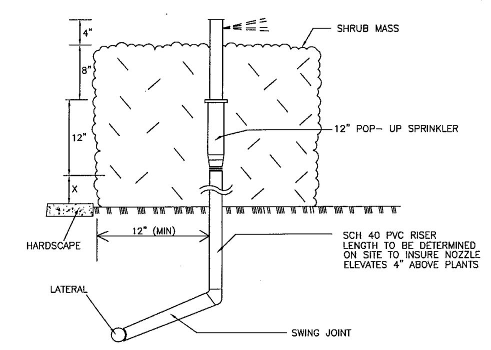

SPRINKLER DETAIL (NTS)
12" POP-UP ON PVC SWING JOINT WITH RISER LOCATED IN PLANT MASS MAINTAINED TO A MINIMUM HEIGHT OF 24".

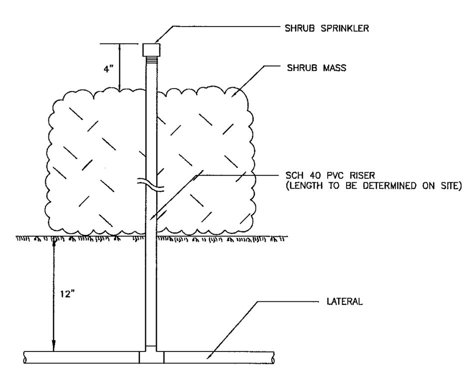

SPRINKLER DETAIL (NTS)
SHRUB SPRAY ON RISER AT INTERIOR LOCATION IN PLANT MASS.

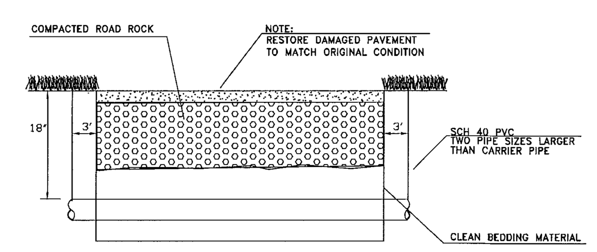

PIPE SLEEVE DETAIL
NOT TO SCALE

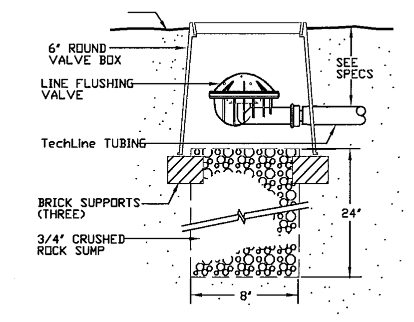

LINE FLUSHING VALVE
PLUMBED TO TECHLINE
NOT TO SCALE

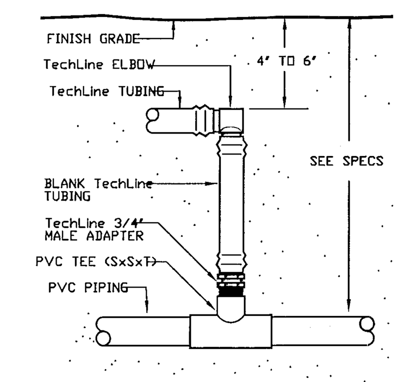

START CONNECTION
PVC TO ELBOW
NOT TO SCALE

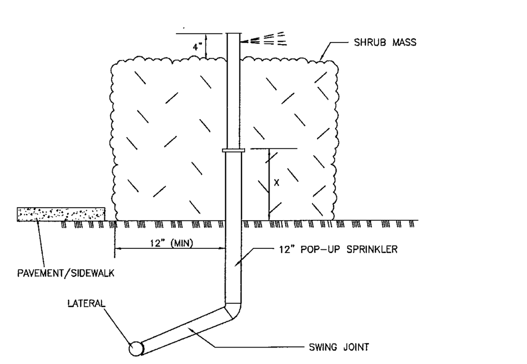

SPRINKLER DETAIL (NTS)
12" POP-UP INSTALLED ON PVC SWING JOINT LOCATED IN PLANT MASS MAINTAINED TO A MAXIMUM HEIGHT OF 18".

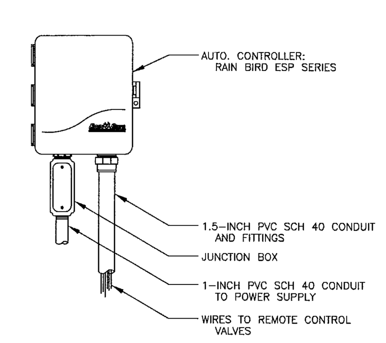

ESP AUTOMATIC CONTROLLER
NOT TO SCALE

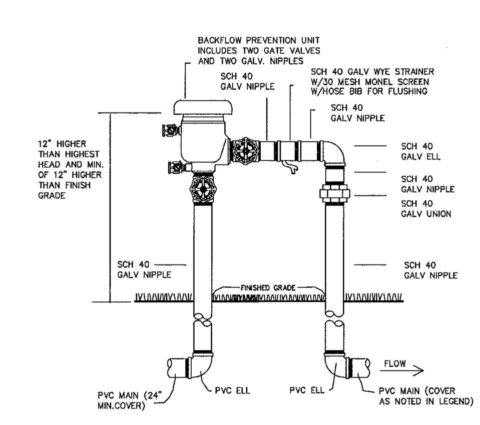

PRESSURE VACUUM BREAKER
NOT TO SCALE

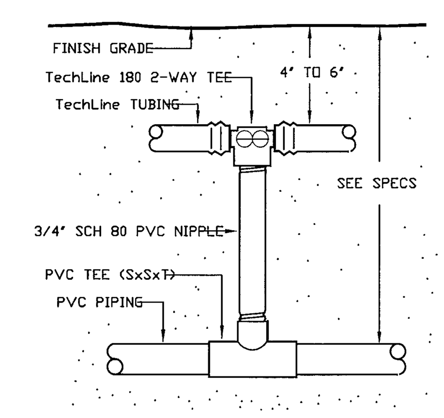

START CONNECTION
WITH PVC RISER
NOT TO SCALE

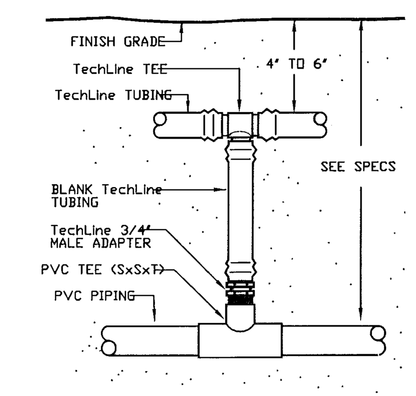

START CONNECTION
PVC TO TEE
NOT TO SCALE

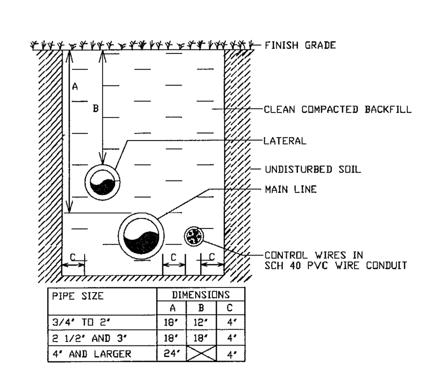

TRENCHING DETAIL (NTS)
NON-TRAFFIC AREAS

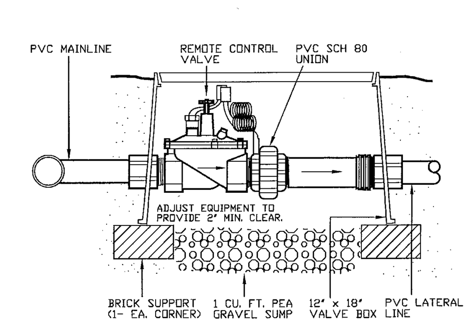

REMOTE CONTROL VALVE DETAIL
NOT TO SCALE

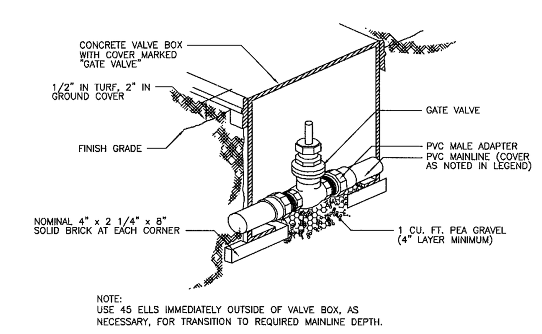

GATE VALVE DETAIL
NOT TO SCALE

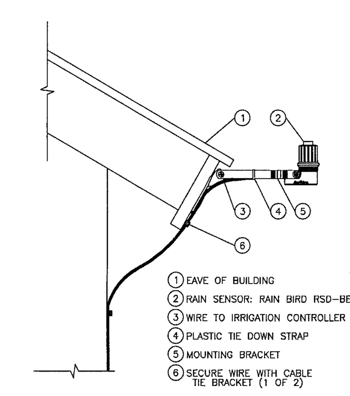

RAIN SENSOR RSD-BEx
NOT TO SCALE

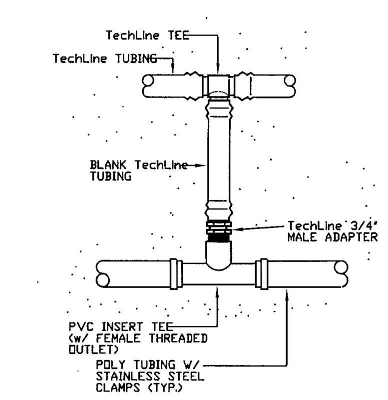

START CONNECTION
POLY TO TEE
NOT TO SCALE

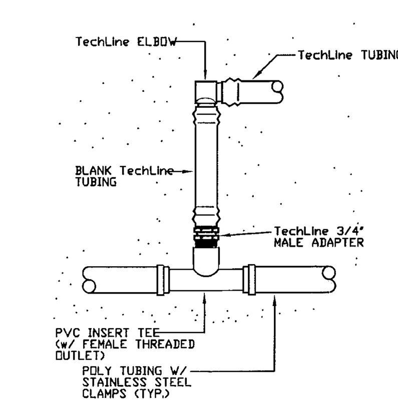

START CONNECTION
POLY TO ELL
NOT TO SCALE

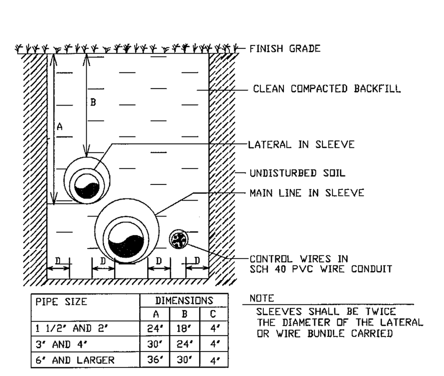

TRENCHING DETAIL (NTS)
VEHICHLAR TRAFFIC AREAS

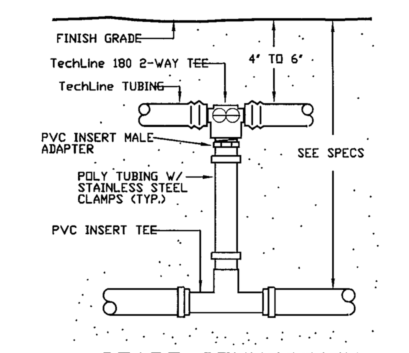

START CONNECTION
POLY TO TECHLINE
NOT TO SCALE

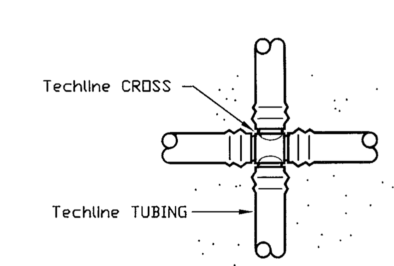

TYPICAL CROSS
NOT TO SCALE

	APP	DATE REVIEWED
BUILDING		
STRUCTURAL		
MECHANICAL		
ELECTRICAL		
PLUMBING		
SITE CIVIL	DG	11/6/14

Norm: [initials] 8-29-14

APPROVED MIAMI BEACH FIRE DEPARTMENT

HADDON HALL
1500 COLLINS AVE

MIAMI BEACH, FL

KEYPLAN N.T.S.

REVISIONS

NO.	DESCRIPTION	ISSUE DATE

savinomiller DESIGN STUDIO
LANDSCAPE ARCHITECTURE I URBAN DESIGN I ARCHITECTURE
12345 NE 6TH AVENUE A NORTH MIAMI, FLORIDA 33161
T: 305.895.9082 F: 305.895.9083 WWW.SAVINOMILLER.COM
AA0002463 LC C00208

PHASE 1
PERMIT SET

SEAL

Jonathan Cardello
Lic. # AR93391

ADD Inc Architecture Interiors Planning

One Biscayne Tower
Suite 1670
Two South
Biscayne Boulevard
Miami, Fl 33131
T. 305.482.8700
F. 305.482.8770
www.addinc.com
Lic. # AA26001507

Boston Miami

JOB NUMBER:	13036.00
CHECKED BY:	
ISSUE DATE:	JANUARY 24, 2014
SCALE:	NTS

SHEET TITLE

LANDSCAPE IRRIGATION – DETAILS

#366 5/21/2014

SHEET NUMBER

LI-2

COPYRIGHT ADD INC 2011

NOTE: EXISTING VEGETATION TO BE TRIMMED AND PRUNED PER LANDSCAPE ARCHITECT'S DIRECTION. NO VEGETATION W/ TRUNK CALIPER 2½" DIAMETER OR LARGER SHALL BE REMOVED WITHOUT LANDSCAPE ARCHITECT'S APPROVAL.

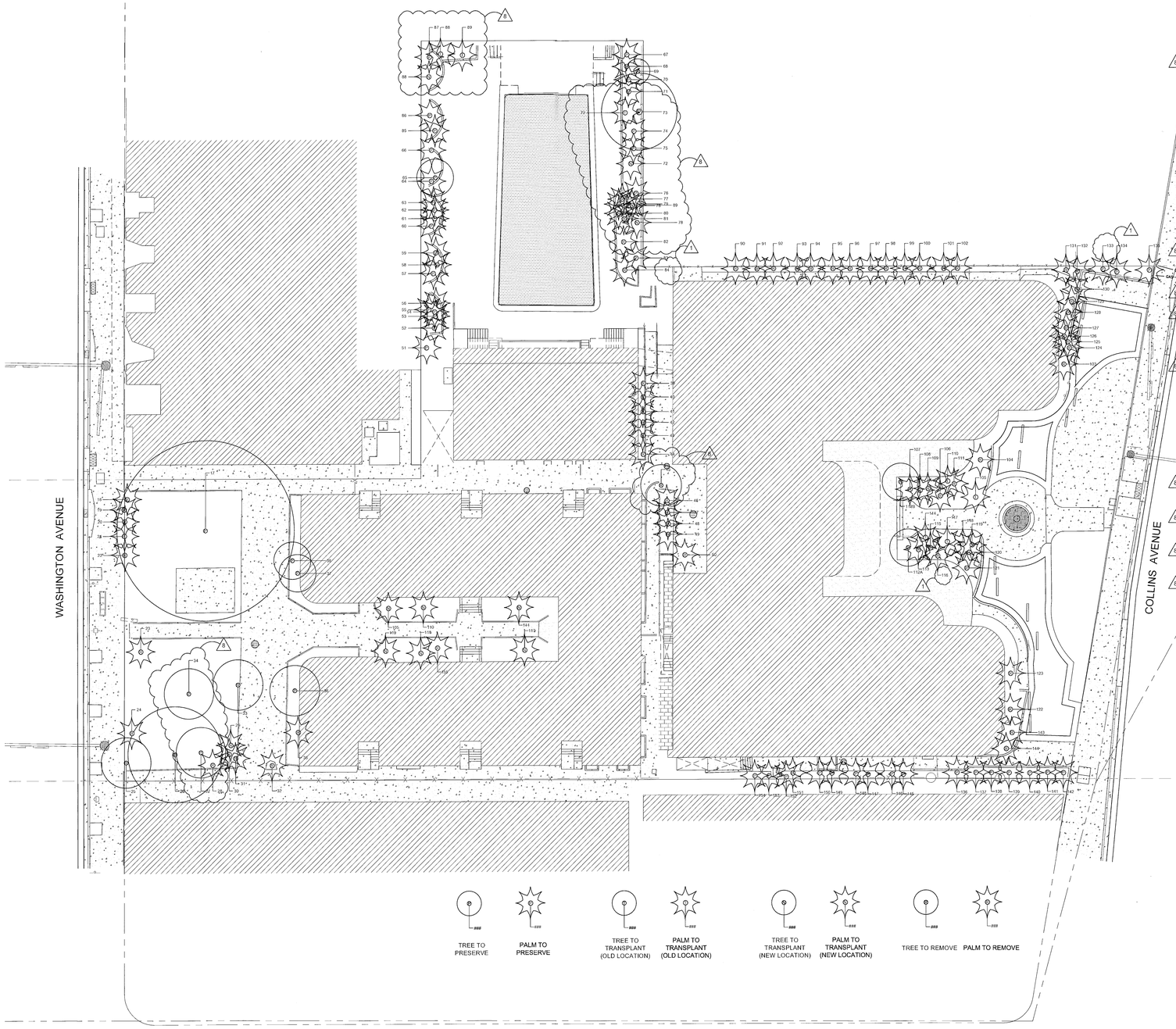

TABLE #	QNTY.	BOTANICAL NAME	COMMON NAME	CONDITION	PRESERVE	TRANSPLANT	REMOVE	TRUNK DBH (IN)	TREE HT. (FT.)	CANOPY DIAM. (FT.)	CANOPY SQ. FT.	ROOTBALL DIAM. (FT.)	SIZE OF HOLE	ROOT PRUNING TIME
1		"Cocos nucifera"	COCONUT PALM		NIC			10	15	15	177			
2		"Cocos nucifera"	COCONUT PALM		NIC			10	15	15	177			
3		"Cocos nucifera"	COCONUT PALM		NIC			10	15	15	177			
4		"Cocos nucifera"	COCONUT PALM		NIC			8	15	15	177			
5		"Cocos nucifera"	COCONUT PALM		NIC			7	15	15	177			
6		"Cocos nucifera"	COCONUT PALM		NIC			8	15	15	177			
7		"Cocos nucifera"	COCONUT PALM		NIC			10	15	15	177			
8		"Cocos nucifera"	COCONUT PALM		NIC			7	15	15	177			
9		"Cocos nucifera"	COCONUT PALM		NIC			8	15	15	177			
10		"Cocos nucifera"	COCONUT PALM		NIC			8	15	15	177			
11		"Cocos nucifera"	COCONUT PALM		NIC			8	15	15	177			
12		"Cocos nucifera"	COCONUT PALM		NIC			8	15	15	177			
13		"Cocos nucifera"	COCONUT PALM		NIC			8	15	15	177			
14		"Cocos nucifera"	COCONUT PALM		NIC			8	15	15	177			
15		"Cocos nucifera"	COCONUT PALM		NIC			7	15	15	177			
16		"Cocos nucifera"	COCONUT PALM		NIC			7	15	15	177			
17		"Ficus spp."	FICUS		X			60	30	30	707			
18		"Ptychosperma elegans"	ALEXANDER PALM				X	5	20	10	79			
19		"Sabal palmetto"	CABBAGE PALM				X	12	10	8	50			
20		"Sabal palmetto"	CABBAGE PALM				X	14	15	10	79			
21		"Sabal palmetto"	CABBAGE PALM				X	12	12	10	79			
22		"Sabal palmetto"	CABBAGE PALM				X	10	6	10	79			
23		"Ptychosperma elegans"	ALEXANDER PALM				X	5	15	8	50			
24		"Ptychosperma elegans"	ALEXANDER PALM				X	5	15	8	50			
25		UNKNOWN	UNKNOWN				X	30	25	20	314			
26		"Prunus dulcis"	ALMOND TREE		X			19	25	30	707			
27		"Prunus dulcis"	ALMOND TREE		X			19	25	30	707			
28		"Ptychosperma elegans"	ALEXANDER PALM				X	6	25	10	79			
29		"Ptychosperma elegans"	ALEXANDER PALM				X	6	25	10	79			
30		"Ptychosperma elegans"	ALEXANDER PALM				X	5	15	10	79			
31		"Ptychosperma elegans"	ALEXANDER PALM				X	5	15	8	50			
32		"Ptychosperma elegans"	ALEXANDER PALM				X	6	20	10	79			
33		"Persea americana"	AVOCADO		X			12	20	20	314			
34		"Persea americana"	AVOCADO		X			12	20	20	207			
35		"Ptychosperma elegans"	ALEXANDER PALM				X	5	15	8	50			
36		"Conocarpus erectus v. sericeus"	SILVER BUTTONWOOD		X			9	15	15	177			
37		"Conocarpus erectus v. sericeus"	SILVER BUTTONWOOD		X			8	10	12	113			
38		"Conocarpus erectus v. sericeus"	SILVER BUTTONWOOD		X			10	12	12	113			
39		"Ptychosperma elegans"	ALEXANDER PALM				X	7	25	10	79			
40		"Ptychosperma elegans"	ALEXANDER PALM				X	6	20	10	79			
41		"Ptychosperma elegans"	ALEXANDER PALM				X	7	25	10	79			
42		"Schinus terebinthifolius"	BRAZILIAN PEPPER				X	3	20	10	79			
43		"Ptychosperma elegans"	ALEXANDER PALM				X	7	25	10	79			
44		"Ptychosperma elegans"	ALEXANDER PALM				X	5	25	10	79			
45		UNKNOWN	UNKNOWN				X	16	25	20	314			
46		"Ptychosperma elegans"	ALEXANDER PALM				X	7	25	10	79			
47		"Ptychosperma elegans"	ALEXANDER PALM				X	5	12	0	0			
48		"Ptychosperma elegans"	ALEXANDER PALM				X	7	25	15	177			
49		"Ptychosperma elegans"	ALEXANDER PALM				X	7	20	15	177			
50		"Ptychosperma elegans"	ALEXANDER PALM				X	4	15	0	0			
51		"Ravenala madagascariensis"	TRAVELER'S PALM		X			8	12	6	28			
52		"Ravenala madagascariensis"	TRAVELER'S PALM		X			7	10	6	28			
53		"Ptychosperma elegans"	ALEXANDER PALM		X			5	15	8	50			
54		"Ptychosperma elegans"	ALEXANDER PALM		X			5	15	8	50			
55		"Ravenala madagascariensis"	TRAVELER'S PALM		X			8	12	6	28			
56		"Chrysalidocarpus lutescens"	ARECA PALM		X			24	10	6	28			
57		"Chrysalidocarpus lutescens"	ARECA PALM		X			24	10	6	28			
58		"Chrysalidocarpus lutescens"	ARECA PALM		X			24	10	6	28			
59		"Chrysalidocarpus lutescens"	ARECA PALM		X			24	10	6	28			
60		"Chrysalidocarpus lutescens"	ARECA PALM		X			24	10	6	28			
61		"Ravenala madagascariensis"	TRAVELER'S PALM		X			10	12	6	28			
62		"Ravenala madagascariensis"	TRAVELER'S PALM		X			10	12	6	28			
63		"Chrysalidocarpus lutescens"	ARECA PALM		X			24	10	6	28			
64		"Chrysalidocarpus lutescens"	ARECA PALM		X			24	10	6	28			
65		UNKNOWN	UNKNOWN		X			48	20	20	314			
66		"Chrysalidocarpus lutescens"	ARECA PALM		X			24	10	6	28			
67		"Chrysalidocarpus lutescens"	ARECA PALM		X			24	12	8	50			
68		"Sabal palmetto"	CABBAGE PALM		X			17	8	0	0			
69		"Schinus terebinthifolius"	BRAZILIAN PEPPER				X	6	20	15	177			
70		"Chrysalidocarpus lutescens"	ARECA PALM		X			14	8	6	28			
71		"Sabal palmetto"	CABBAGE PALM		X			12	10	4	13			
72		"Sabal palmetto"	CABBAGE PALM		X			12	10	8	28	3.5	4	30
73		"Sabal palmetto"	CABBAGE PALM		X			12	6	4	13			
74		"Sabal palmetto"	CABBAGE PALM		X			12	10	6	28			
75		"Sabal palmetto"	CABBAGE PALM		X			12	12	8	50			
76		"Sabal palmetto"	CABBAGE PALM		X			12	12	8	50			
77		"Ptychosperma elegans"	ALEXANDER PALM				X	5	15	8	50			
78		"Ptychosperma elegans"	ALEXANDER PALM			X		5	15	8	50	3.5	4	30
79		"Ptychosperma elegans"	ALEXANDER PALM				X	5	20	8	50			
80		"Ptychosperma elegans"	ALEXANDER PALM				X	5	20	8	50			
81		"Ptychosperma elegans"	ALEXANDER PALM				X	5	20	8	50			
82		"Ptychosperma elegans"	ALEXANDER PALM				X	5	20	8	50			
83		"Sabal palmetto"	CABBAGE PALM		X			12	20	8	50			
84		"Chrysalidocarpus lutescens"	ARECA PALM				X	36	20	10	79			
85		"Chrysalidocarpus lutescens"	ARECA PALM		X			24	15	8	50			
86		"Caryota mitis"	FISHTAIL PALM		X			24	15	8	50			
87		"Ravenala madagascariensis"	TRAVELER'S PALM		X			12	15	6	28			
88		"Sabal palmetto"	CABBAGE PALM			X		12	10	6	28	3.5	4	30
89		"Sabal palmetto"	CABBAGE PALM			X		12	15	8	50	3.5	4	30
90		"Ptychosperma elegans"	ALEXANDER PALM				X	6	20	10	79			
91		"Ptychosperma elegans"	ALEXANDER PALM				X	7	20	10	79			
92		"Ptychosperma elegans"	ALEXANDER PALM				X	6	20	10	79			
93		"Ptychosperma elegans"	ALEXANDER PALM				X	7	20	10	79			
94		"Ptychosperma elegans"	ALEXANDER PALM				X	6	20	10	79			
95		"Ptychosperma elegans"	ALEXANDER PALM				X	7	20	10	79			
96		"Ptychosperma elegans"	ALEXANDER PALM				X	5	15	10	79			
97		"Ptychosperma elegans"	ALEXANDER PALM				X	8	20	10	79			
98		"Ptychosperma elegans"	ALEXANDER PALM				X	7	15	10	79			
99		"Ptychosperma elegans"	ALEXANDER PALM				X	4	15	6	28			
100		"Ptychosperma elegans"	ALEXANDER PALM				X	4	15	6	28			
101		"Ptychosperma elegans"	ALEXANDER PALM				X	5	15	6	28			
102		"Ptychosperma elegans"	ALEXANDER PALM				X	6	15	6	28			
103		"Sabal palmetto"	CABBAGE PALM				X	12	15	8	50			
104		"Veitchia merrillii"	CHRISTMAS PALM			X		7	15	8	50			
105		"Veitchia merrillii"	CHRISTMAS PALM			X		11	12	8	50	3.5	4	30
106		"Veitchia merrillii"	CHRISTMAS PALM				X	8	12	8	50			
107		"Veitchia merrillii"	CHRISTMAS PALM				X	6	20	8	50			
108		"Acoelorrhaphe wrightii"	PAURROTIS PALM				X	8	12	6	28			
109		"Veitchia merrillii"	CHRISTMAS PALM				X	7	15	6	28			
110		"Veitchia merrillii"	CHRISTMAS PALM			X		5	15	6	28	3.5	4	30
112A		"Acoelorrhaphe wrightii"	PAURROTIS PALM				X	7	12	6	28			
112A		"Ligustrum lucidum"	Tree Privet		X									
112B		"Ligustrum lucidum"	Tree Privet				X	14	12	16	201			
113		"Acoelorrhaphe wrightii"	PAURROTIS PALM				X	7	8	6	28			
114		"Veitchia merrillii"	CHRISTMAS PALM			X		7	10	8	50	3.5	4	30
115		"Acoelorrhaphe wrightii"	PAURROTIS PALM				X	7	8	6	28			
116		"Sabal palmetto"	CABBAGE PALM				X	12	10	6	28			
117		"Veitchia merrillii"	CHRISTMAS PALM		X			6	15	6	28	3.5	4	30
118		"Veitchia merrillii"	CHRISTMAS PALM		X			12	15	6	28	3.5	4	30
119		"Veitchia merrillii"	CHRISTMAS PALM		X			5	15	6	28	3.5	4	30
120		"Sabal palmetto"	CABBAGE PALM				X	12	10	6	28			
121		"Sabal palmetto"	CABBAGE PALM				X	12	12	6	28			
122		"Sabal palmetto"	CABBAGE PALM				X	12	12	6	28			
123		"Sabal palmetto"	CABBAGE PALM				X	12	12	6	28			
124		"Sabal palmetto"	CABBAGE PALM				X	8	6	6	28			
125		"Sabal palmetto"	CABBAGE PALM				X	8	6	6	28			
126		"Sabal palmetto"	CABBAGE PALM				X	8	6	6	28			
127		"Sabal palmetto"	CABBAGE PALM				X	10	15	8	50			
128		"Sabal palmetto"	CABBAGE PALM				X	12	15	8	50			
129		"Sabal palmetto"	CABBAGE PALM				X	12	15	8	50			
130		"Sabal palmetto"	CABBAGE PALM				X	12	15	7	38			
131		"Sabal palmetto"	CABBAGE PALM				X	14	15	8	50			
132		"Sabal palmetto"	CABBAGE PALM				X	12	15	8	50			
133		"Sabal palmetto"	CABBAGE PALM		X			12	15	8	50			
134		"Sabal palmetto"	CABBAGE PALM		X			12	15	8	50			
135		"Sabal palmetto"	CABBAGE PALM		X			10	15	6	50			
136		"Arecastrum romanzoffianum"	QUEEN PALM		X			30	35	32	113			
137		"Sabal palmetto"	CABBAGE PALM		X			10	12	8	50			
138		"Sabal palmetto"	CABBAGE PALM		X			12	15	8	50			
139		"Sabal palmetto"	CABBAGE PALM		X			12	12	8	50			
140		"Sabal palmetto"	CABBAGE PALM		X			10	12	8	50			
141		"Sabal palmetto"	CABBAGE PALM		X			10	12	6	50			
142		"Sabal palmetto"	CABBAGE PALM		X			10	12	8	50			
143		"Sabal palmetto"	CABBAGE PALM				X	10	12	8	50			
144		"Sabal palmetto"	CABBAGE PALM				X	10	12	8	50			
145		"Veitchia merrillii"	CHRISTMAS PALM		X			7	15	8	50			
146		"Veitchia merrillii"	CHRISTMAS PALM		X			7	15	8	50			
147		"Veitchia merrillii"	CHRISTMAS PALM		X			7	15	8	50			
148		"Veitchia merrillii"	CHRISTMAS PALM		X			6	15	8	50			
149		"Veitchia merrillii"	CHRISTMAS PALM		X			7	15	8	50			
150		"Veitchia merrillii"	CHRISTMAS PALM		X			7	15	8	50			
151		"Veitchia merrillii"	CHRISTMAS PALM		X			7	15	8	50			
152		"Veitchia merrillii"	CHRISTMAS PALM		X			5	12	8	50			
153		"Veitchia merrillii"	CHRISTMAS PALM		X			7	15	8	50			
154		"Veitchia merrillii"	CHRISTMAS PALM		X			7	15	8	50			
155		"Washingtonia robusta"	Washington Palm				X							

TREE TO PRESERVE | PALM TO PRESERVE | TREE TO TRANSPLANT (OLD LOCATION) | PALM TO TRANSPLANT (OLD LOCATION) | TREE TO TRANSPLANT (NEW LOCATION) | PALM TO TRANSPLANT (NEW LOCATION) | TREE TO REMOVE | PALM TO REMOVE

MTCI
PRIVATE PROVIDER SERVICES, LLC
Construction Plans Review, Inspections, Testing & Consulting

	REVIEWER INITIALS	DATE REVIEWED
BUILDING		
STRUCTURAL		
MECHANICAL		
ELECTRICAL		
PLUMBING		
SITE CIVIL		

Conny: 8.29.14

APPROVED
MIAMI BEACH
FIRE DEPARTMENT

HADDON HALL
1500 COLLINS AVE
MIAMI BEACH, FL

KEYPLAN N.T.S.

REVISIONS

NO.	DESCRIPTION	ISSUE DATE
1	Progress to 100% CD Set	02/18/2014
8	DRB# Comments	04/23/2014

savinomiller
DESIGN STUDIO
LANDSCAPE ARCHITECTURE | URBAN DESIGN | ARCHITECTURE
12345 NE 6TH AVENUE A NORTH MIAMI, FLORIDA 33161
T. 305.895.9082 F. 305.895.9083 WWW.SAVINOMILLER.COM
AA0602463 LC C00209

PHASE 1
PERMIT SET

NORTH SEAL

Jonathan Cardello
Lic. # AR93391

ADD Inc Architecture Interiors Planning

One Biscayne Tower
Suite 1670
Two South
Biscayne Boulevard
Miami, Fl 33131
T. 305.482.8700
F. 305.482.8770
www.addinc.com
Lic. # AA26001507

Boston Miami

JOB NUMBER: 13036.00
CHECKED BY:
ISSUE DATE: JANUARY 24, 2014
SCALE: 1/16" = 1'-0"

SHEET TITLE
TREE MANAGEMENT PLAN

#866
5/21/2014

SHEET NUMBER
LT-1

COPYRIGHT ADD INC 2011

TRAVEL DISTANCE, COMMON PATH OF TRAVEL, DEAD-END LIMIT (FBC 1013.3, 1015.1, & NFPA A.7.6) – SPRINKLERED

OCCUPANCY CLASSIFICATION	FUNCTION OF SPACE	TRAVEL DISTANCE TO EXITS	COMMON PATHS OF TRAVEL	DEAD-END LIMIT
RESIDENTIAL (R-1)	HOTEL	200 FT.	125 FT. (IN UNIT) / 50 FT.	20 FT.

"CAMPTON" YARD AND POOL DECK OCCUPANT LOADS

MAXIMUM OCCUPANCY (FBC TABLE 1004.1.1 & NFPA TABLE 7.3.1.)

ROOM #	FUNCTION OF SPACE	OCCUPANCY	OCCUPANT LOAD FACTOR	GROSS FLOOR AREA	TOTAL OCCUPANTS (PERSONS)
NORTH YARD	SEATING/ LOUNGE	ASSEMBLY (A-2)	15 GSF PER PERSON	1,451 GSF	97
SOUTH YARD	SEATING/ LOUNGE	ASSEMBLY (A-2)	15 GSF PER PERSON	984 GSF	66
SOUTH YARD	BAR	ASSEMBLY (A-2)	18" BAR LENGTH PER PERSON + 2 ROWS OF PEOPLE	273"	30
--	POOL	POOL	50 GSF PER PERSON	2,119 GSF	43
--	POOL DECK	POOL DECK	30 GSF PER PERSON	4,420 GSF	147
	TOTAL				383 PERSONS

LIFE SAFETY PLAN NOTES

1. ALL PENETRATIONS THROUGH FIRE-RATED PARTITIONS AND BARRIERS MUST BE BUILT ACCORDING TO THE UL-LISTED FIRE-RESISTANT-RATED SYSTEMS.
2. ALL PENETRATIONS THROUGH SMOKE-RATED PARTITIONS AND BARRIERS MUST UTILIZE PRODUCTS TO RESIST THE PASSAGE OF AIR AND SMOKE.
3. PORTABLE FIRE EXTINGUISHERS SHALL BE PROVIDED IN EVERY OCCUPANCY IN ACCORDANCE NFPA 10 (Standard for Portable Fire Extinguishers) PER N.F.P.A 101 9.7.4.1. THE QUANTITY AND LOCATIONS WILL BE REVIEWED AND APPROVED WITH THE AUTHORITY HAVING JURISDICTION.
4. NO DUCTS, PIPING, OR CONDUITS WILL BE PERMITTED WITHIN THE EXIST STAIR ENCLOSURE UNLESS THEY SERVE THE STAIR.
5. LIFE SAFETY DRAWINGS TO SUPERCEDE ALL OTHER DISCIPLINES.
6. FIRE ALARM AND SPRINKLERS WORK IS DEFERRED BEYOND SCOPE OF THESE ROADS.
7. EXISTING WALLS NOT IN SCOPE OF WORK UNLESS OTHERWISE NOTED WITH RATING SYMBOL.
8. EXISTING SMOKE DETECTORS OCCUR IN ALL HADDON HALL AND CAMPTON APARTMENT GUESTROOMS. NEW SMOKE DETECTORS TO BE PROVIDED IN POOL SUITES BUILDING AND RECONFIGURED CAMPTON ROOMS.
9. ALL DOORS ALONG THE MEANS OF EGRESS MUST BE OPERABLE WITHOUT THE USE OF A KEY, TOOL OR SPECIAL KNOWLEDGE.
10. ANY DOOR S SWINGING INTO THE REQUIRED MEANS OF EGRESS MUST BE SELF CLOSING.

These drawings do not depict and/or provide design direction for specific fire protection systems within the City of Miami Beach, Miami-Dade County, Florida. These drawings do depict and provide design direction for specific life safety features (fire partitions, exit access passageways and other life and life safety architectural features as required by local authority having jurisdiction (City of Miami Beach Fire Department and City of Miami Beach Building Department), Florida Building Code, 2004 Edition (FBC), and the applicable codes and standards referenced within the FBC for live type occupancy.

These drawings provide general guidance to design professionals and indicate fire and fire/smoke separations for the purpose of designing smoke management zones, automatic suppression zones and emergency voice alarm communication zoneg which are to be in concert with architectural fire & life safety features, as required by code.

LIFE SAFETY PLAN LEGEND

- CUMULATIVE NUMBER OF OCCUPANTS ALONG EGRESS PATH
- FUNCTION OF SPACE
- GROSS FLOOR AREA (SF)
- ROOM OCCUPANT LOAD FACTOR (TABLE 1004.1.1)
- EXIT NUMBER
- USE / # OF OCCUPANTS
- CAPACITY OF OCCUPANTS
- EXIT NUMBER
- MINIMUM EGRESS WIDTH REQUIRED
- EGRESS WIDTH PROVIDED
- MINIMUM STAIR WIDTH REQUIRED
- STAIR WIDTH PROVIDED
- SMOKE PARTITION
- ONE HOUR FIRE RATING
- TWO HOUR FIRE RATING
- THREE HOUR FIRE RATING
- FOUR HOUR FIRE RATING
- DOOR RESISTS THE PASSAGE OF SMOKE
- 20 MIN. RATED DOOR ASSEMBLY
- 45 MIN. RATED CLASS "C" DOOR ASSEMBLY
- 1 1/2 HR. RATED CLASS "B" DOOR ASSEMBLY
- 3 HR. RATED CLASS "A" DOOR ASSEMBLY
- CEILING MOUNTED
- WALL MOUNTED
- FIRE EXTINGUISHER CABINET
- BRACKET MOUNTED FIRE EXTINGUISHER
- FIRE SPRINKLERS
- FIRE ALARM DEVICE VISUAL SIGNAL
- FIRE ALARM DEVICE COMBINATION SIGNAL
- FIRE ALARM SPEAKER SIGNAL
- HEAT DETECTOR
- WALL MOUNTED SMOKE DETECTOR
- CEILING MOUNTED SMOKE DETECTOR
- FIRE ALARM DEVICE PULL STATION
- FLOW SWITCH
- SNIPER SWITCH
- VALVE BOX

SITE EGRESS CAPACITY PER OCCUPANT SERVED (FBC TABLE 1005.1 & NFPA TABLE 7.3.3.1)

PG.1	PG.2	PG.3	PG.3a	PG.3b	PG.4	PG.5	CUMULATIVE TOTAL OCCUPANTS	MINIMUM REQ. WIDTH (LEVEL)	PROVIDED	MINIMUM REQ. WIDTH (STAIRWAY & RAMPS)	PROVIDED
95 OCC.							95 OCC./ 1 EXIT = 95 OCC./EXIT	95 OCC. @ 0.2/OCC. = 19"	36"	95 OCC. @ .3 OCC. = 28.5"	--
	95 OCC.						95 OCC./ 1 EXIT = 95 OCC./EXIT	95 OCC. @ 0.2/OCC. = 19"	36"	95 OCC. @ .3 OCC. = 28.5"	--
		201 OCC.					201 OCC./ 1 EXIT = 201 OCC./EXIT	201 OCC. @ 0.2/OCC. = 40"	72"	201 OCC. @ .3 OCC. = 60.3"	--
			177 OCC.				177 OCC./ 1 EXIT = 177 OCC./EXIT	177 OCC. @ 0.2/OCC. = 35.4"	36"	177 OCC. @ .3 OCC. = 53.1"	--
				146 OCC.			146 OCC./ 1 EXIT = 146 OCC./EXIT	146 OCC. @ 0.2/OCC. = 29.2"	36"	146 OCC. @ .3 OCC. = 43.8"	--
					153 OCC.		153 OCC./ 1 EXIT = 153 OCC./EXIT	153 OCC. @ 0.2/OCC. = 30.6"	42"	153 OCC. @ .3 OCC. = 45.9"	--
						30 OCC.	30 OCC./ 1 EXIT = 30 OCC./EXIT	30 OCC. @ 0.2/OCC. = 6.0"	42"	30 OCC. @ .3 OCC. = 9"	--

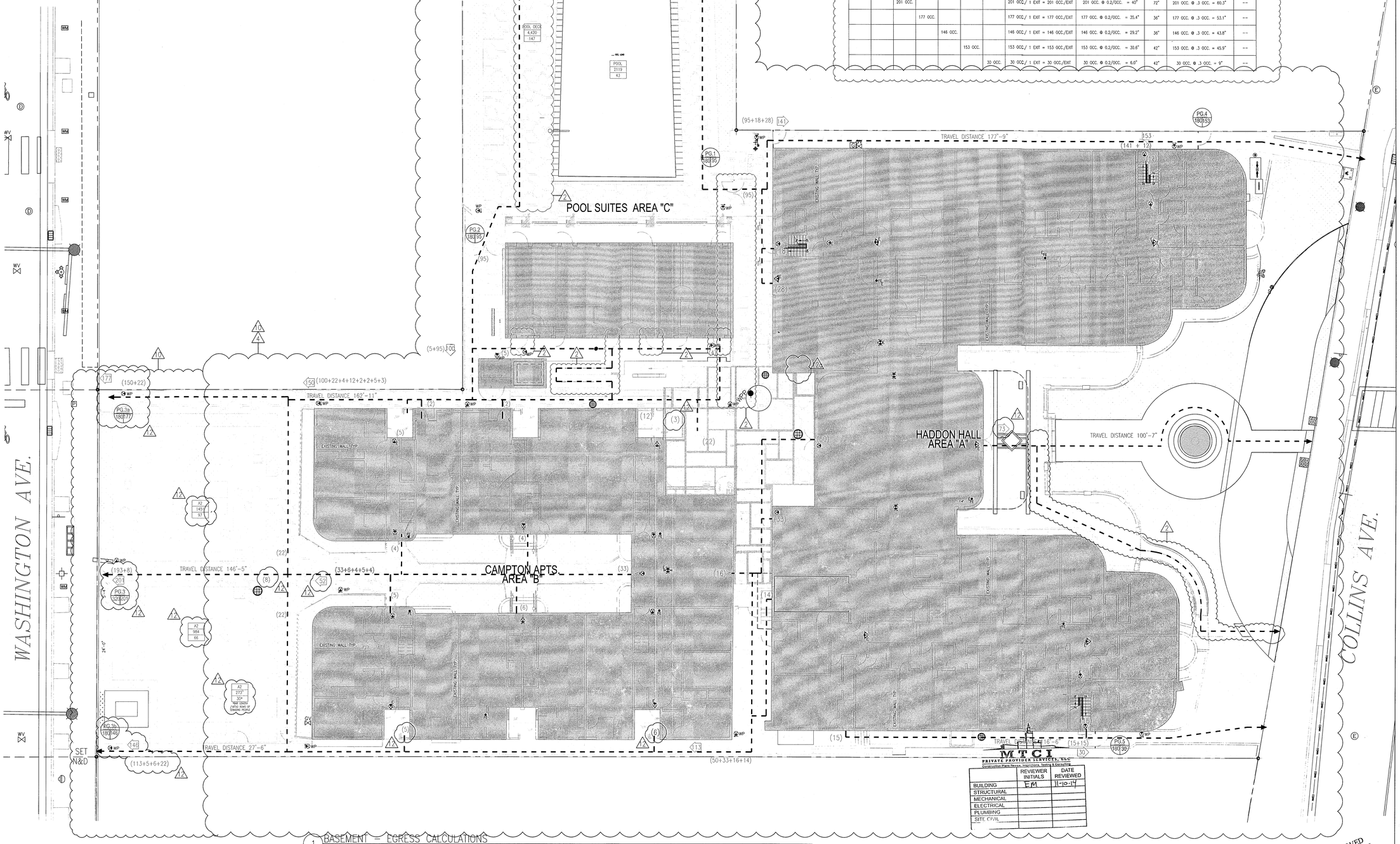

1 BASEMENT – EGRESS CALCULATIONS
SCALE: 1/8" = 1'-0"

MTGI PRIVATE PROVIDER SERVICES, LLC
Construction Plans Review, Inspections, Testing & Consulting

	REVIEWER INITIALS	DATE REVIEWED
BUILDING	EM	11-10-14
STRUCTURAL		
MECHANICAL		
ELECTRICAL		
PLUMBING		
SITE CIVIL		

APPROVED MIAMI BEACH FIRE DEPARTMENT

HADDON HALL
1500 COLLINS AVE
MIAMI BEACH, FL

KEYPLAN N.T.S.

REVISIONS

NO.	DESCRIPTION	ISSUE DATE
1	PROGRESS TO 100% CD	02-18-2014
2	PERMIT REVIEW COMMENTS	03-21-2014
4	FIRE REVIEW COMMENTS	04-01-2014
10	MASTER PERMIT COMMENTS	07-03-2014
12	FIRE & MTCI PERMIT COMMENTS	08-21-2014
12a	FIRE & MTCI PERMIT COMMENTS	09-29-2014

100% CONSTRUCTION DOCUMENT SET

NORTH SEAL

10.9.14
Jonathan Cardello
Lic. # AR93391

ADD Inc Architecture Interiors Planning

One Biscayne Tower
Suite 1670
Two South
Biscayne Boulevard
Miami, Fl 33131
T. 305.482.8700
F. 305.482.8770
www.addinc.com
Lic. # AA26001507

Boston Miami

JOB NUMBER: 13036.00
CHECKED BY:
ISSUE DATE: FEBRUARY 18, 2014
SCALE: 3/32" = 1'-0"

SHEET TITLE

LIFE SAFETY SITE PLAN

SHEET NUMBER

LS000

COPYRIGHT ADD INC 2011

HADDON HALL
1500 COLLINS AVE
MIAMI BEACH, FL

KEYPLAN N.T.S.

TRAVEL DISTANCE, COMMON PATH OF TRAVEL, DEAD-END LIMIT (FBC 1013.3, 1015.1, & NFPA 7.7.6) - SPRINKLERED

OCCUPANCY CLASSIFICATION	FUNCTION OF SPACE	TRAVEL DISTANCE TO EXITS	COMMON PATHS OF TRAVEL	DEAD-END LIMIT
RESIDENTIAL (R-1)	HOTEL	200 FT.	125 FT. (IN UNIT) / 50 FT.	20 FT.

"HADDON HALL" BASEMENT LEVEL OCCUPANT LOADS

MAXIMUM OCCUPANCY (FBC TABLE 1004.1.1 & NFPA TABLE 7.3.1.)

ROOM #	FUNCTION OF SPACE	OCCUPANCY	OCCUPANT LOAD FACTOR	GROSS FLOOR AREA	TOTAL OCCUPANTS (PERSONS)
002	TRASH ROOM	STORAGE (S-2)	300 GSF PER PERSON	272 GSF	1
003	STORAGE	STORAGE (S-2)	300 GSF PER PERSON	275 GSF	1
004	FLOOD PANEL STORAGE	STORAGE (S-2)	300 GSF PER PERSON	308 GSF	2
005	BOILER ROOM	STORAGE (S-2)	300 GSF PER PERSON	150 GSF	1
006	STORAGE	STORAGE (S-1)	300 GSF PER PERSON	42 GSF	1
008	STORAGE	STORAGE (S-1)	300 GSF PER PERSON	52 GSF	1
009	STORAGE	STORAGE (S-1)	300 GSF PER PERSON	31 GSF	1
010	STORAGE	STORAGE (S-1)	300 GSF PER PERSON	28 GSF	1
012	BREAK ROOM	ASSEMBLY (A-3)	15 GSF PER PERSON	196 GSF	14
013	TOILET ROOM	BUSINESS (B)	100 GSF PER PERSON	48 GSF	1
014	WOMEN'S LOCKER ROOM	BUSINESS (B)	100 GSF PER PERSON	81 GSF	1
015	MEN'S LOCKER ROOM	BUSINESS (B)	100 GSF PER PERSON	81 GSF	1
016	TOILET ROOM	BUSINESS (B)	100 GSF PER PERSON	48 GSF	1
017	STORAGE ROOM	STORAGE (S-2)	300 GSF PER PERSON	35 GSF	1
018	WATER HEATER	STORAGE (S-2)	300 GSF PER PERSON	19 GSF	1
	TOTAL				29 PERSONS

"CAMPTON" BASEMENT LEVEL OCCUPANT LOADS

ROOM #	FUNCTION OF SPACE	OCCUPANCY	OCCUPANT LOAD FACTOR	GROSS FLOOR AREA	TOTAL OCCUPANTS (PERSONS)
019	STORAGE	STORAGE (S-2)	300 GSF PER PERSON	66 GSF	1
020	STORAGE	STORAGE (S-2)	300 GSF PER PERSON	269 GSF	1
021	UTILITIY	STORAGE (S-2)	300 GSF PER PERSON	34 GSF	1
022	STORAGE	STORAGE (S-2)	300 GSF PER PERSON	87 GSF	1
024	STORAGE	STORAGE (S-2)	300 GSF PER PERSON	197 GSF	1
026	CLOSET	STORAGE (S-2)	300 GSF PER PERSON	18 GSF	1
028	TOILET ROOM	BUSINESS (B)	100 GSF PER PERSON	34 GSF	1
	TOTAL				7 PERSONS

10, 12

LIFE SAFETY PLAN NOTES

1. ALL PENETRATIONS THROUGH FIRE-RATED PARTITIONS AND BARRIERS MUST BE BUILT ACCORDING TO THE UL-LISTED FIRE-RESISTANCE DIRECTORY'S DESIGNS.
2. ALL PENETRATIONS THROUGH SMOKE-RATED PARTITIONS AND BARRIERS MUST UTILIZE PRODUCTS TO RESIST THE PASSAGE OF AIR AND SMOKE.
3. PORTABLE FIRE EXTINGUISHERS SHALL BE PROVIDED IN EVERY ASSIGNED OCCUPANCY IN ACCORDANCE NFPA 10 (STANDARD FOR PORTABLE FIRE EXTINGUISHERS) PER N.F.P.A 101 9.7.4.1. THE QUANTITY AND LOCATIONS WILL BE REVIEWED AND APPROVED WITH THE AUTHORITY HAVING JURISDICTION.
4. NO DUCTS, PIPING, OR CONDUITS WILL BE PERMITTED WITHIN THE EXIST STAIR ENCLOSURE UNLESS THEY SERVE THE STAIR.
5. LIFE SAFETY DRAWINGS TO SUPERCEDE ALL OTHER DISCIPLINES.
6. FIRE ALARM AND SPRINKLERS WORK IS INCLUDED WITHIN SCOPE OF THESE ROOMS.
7. EXISTING WALLS NOT IN SCOPE OF WORK UNLESS OTHERWISE NOTED WITH RATING SYMBOL
8. EXISTING SMOKE DETECTORS OCCUR IN ALL HADDON HALL AND CAMPTON APARTMENT GUESTROOMS. NEW SMOKE DETECTORS TO BE PROVIDED IN POOL SUITES BUILDING AND RECONFIGURED CAMPTON ROOMS.
9. ANY GATES ALONG THE MEANS OF EGRESS MUST BE OPERABLE WITHOUT THE USE OF A KEY, TOOL OR SPECIAL KNOWLEDGE.
10. ANY DOOR S SWINGING INTO THE REQUIRED MEANS OF EGRESS MUST BE SELF CLOSING

These drawings do not depict and/or provide design direction for specific fire protection systems within the City of Miami Beach. These drawings do indicate rated fire and fire/smoke barriers, rated horizontal and vertical exit enclosures, smoke partitions, exit access passageways and other fire and life safety architectural features as required by local authority having jurisdiction (City of Miami Beach Fire Department and City of Miami Beach Building Department), Florida Building Code, 2004 Edition (FBC), and the applicable codes and standards referenced within the FBC for the type occupancy.

4

NOTES:
1. FOR SPRINKLER HEAD LOCATION REFER TO FIRE PROTECTION DRAWINGS; SEE FP SHEETS
2. REFER TO ELECTRICAL DRAWINGS FOR EMERGENCY LIGHTING.
3. A 44" CLEAR PATH MUST BE MAINTAINED ALONG EGRESS PATH.
4. ALL PAVING ALONG EGRESS PATH MUST COMPLY WITH F.F.P.C. 7.1.6.4

LIFE SAFETY PLAN LEGEND

- 1 — CUMULATIVE NUMBER OF OCCUPANTS ALONG EGRESS PATH
- B / 1500 SF / 15 — FUNCTION OF SPACE; GROSS FLOOR AREA (SF); ROOM OCCUPANT LOAD FACTOR (TABLE 1004.1.1)
- B-1 / 168 34 — EXIT NUMBER; USE/ # OF OCCUPANTS; CAPACITY OF OCCUPANTS
- ST1 — EXIT NUMBER
- 32" — MINIMUM EGRESS WIDTH REQUIRED
- 60" — EGRESS WIDTH PROVIDED
- 44" — MINIMUM STAIR WIDTH REQUIRED
- 144" — STAIR WIDTH PROVIDED
- S — SMOKE PARTITION
- 1 — ONE HOUR FIRE RATING
- 2 — TWO HOUR FIRE RATING
- 3 — THREE HOUR FIRE RATING
- 4 — FOUR HOUR FIRE RATING
- R — DOOR RESISTS THE PASSAGE OF SMOKE
- 20 — 20 MIN. RATED DOOR ASSEMBLY
- C 45 — 45 MIN. RATED CLASS "C" DOOR ASSEMBLY
- B 90 — 1 1/2 HR. RATED CLASS "B" DOOR ASSEMBLY
- A 180 — 3 HR. RATED CLASS "A" DOOR ASSEMBLY
- CEILING MOUNTED
- WALL MOUNTED
- 1500
- SP
- MH
- FEC — FIRE EXTINGUISHER CABINET
- FE — BRACKETT MOUNTED FIRE EXTINGUISHER
- FIRE SPRINKLERS
- FIRE ALARM DEVICE VISUAL SIGNAL
- FIRE ALARM DEVICE COMBINATION SIGNAL
- S — FIRE ALARM SPEAKER SIGNAL
- HEAT DETECTOR
- S — WALL MOUNTED SMOKE DETECTOR
- S — CEILING MOUNTED SMOKE DETECTOR
- F — FIRE ALARM DEVICE PULL STATION
- FS — FLOW SWITCH
- TS — TAMPER SWITCH
- BV — VALVE BOX

12

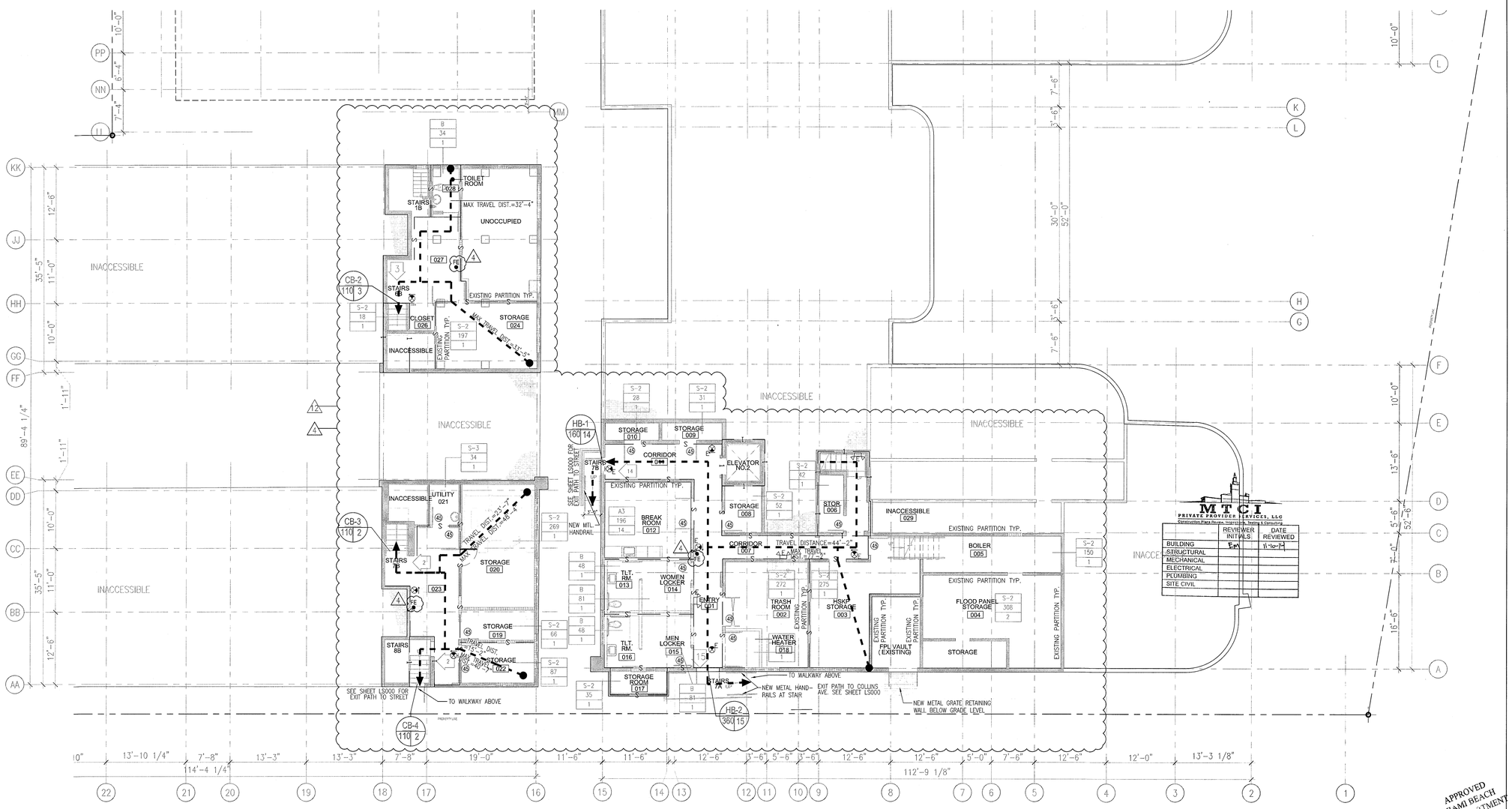

1 BASEMENT LEVEL - LIFE SAFETY PLAN
SCALE: 1/8" = 1'-0"

APPROVED MIAMI BEACH FIRE DEPARTMENT

EGRESS CAPACITY PER OCCUPANT SERVED (FBC TABLE 1005.1 & NFPA TABLE 7.3.3.1)									
HB-1	HB-2	CB-2	CB-3	CB-4	CUMULATIVE TOTAL OCCUPANTS	MINIMUM REQ. WIDTH (LEVEL)	PROVIDED	MINIMUM REQ. WIDTH (STAIRWAY & RAMPS)	PROVIDED
14 OCC.					14 OCC./ 1 EXIT = 14 OCC./EXIT	14 OCC. @ 0.2/OCC. = 2.8"	36"	14 OCC. @ .3 OCC. = 4.2"	36"
	15 OCC.				15 OCC./ 1 EXIT = 15 OCC./EXIT	15 OCC. @ 0.2/OCC. = 3"	48"	15 OCC. @ .3 OCC. = 4.5"	36"
		3 OCC.			3 OCC./ 1 EXIT = 3 OCC./EXIT	3 OCC. @ 0.2/OCC. = 0.6"	36"	3 OCC. @ .3 OCC. = 0.9"	43"
			2 OCC.		2 OCC./ 1 EXIT = 2 OCC./EXIT	2 OCC. @ 0.2/OCC. = 0.4"	36"	2 OCC. @ .3 OCC. = 0.6"	49"
				2 OCC.	2 OCC./ 1 EXIT = 2 OCC./EXIT	2 OCC. @ .2" OCC. = 0.4"	36"	2 OCC. @ .3 OCC. = 0.6"	45"

12, 10

REVISIONS		
NO.	DESCRIPTION	ISSUE DATE
4	FIRE REVIEW COMMENTS	04-01-2014
10	MASTER PERMIT COMMENTS	07-03-2014
12	FIRE & MTCI PERMIT COMMENTS	08-21-2014

100% CONSTRUCTION DOCUMENT SET

NORTH SEAL

9-3-14
Jonathan Cardello
Lic. # AR93391

ADD Inc Architecture Interiors Planning

One Biscayne Tower
Suite 1670
Two South
Biscayne Boulevard
Miami, Fl 33131
T. 305.482.8700
F. 305.482.8770
www.addinc.com
Lic. # AA26001507

Boston Miami

JOB NUMBER:	13036.00
CHECKED BY:	
ISSUE DATE:	FEBRUARY 18, 2014
SCALE:	1/8" = 1'-0"

SHEET TITLE

LIFE SAFETY PLAN
BASEMENT LEVEL

SHEET NUMBER

LS100

COPYRIGHT ADD INC 2011

"HADDON HALL" FIRST LEVEL OCCUPANT LOADS

MAXIMUM OCCUPANCY (FBC TABLE 1004.1.1 & NFPA TABLE 7.3.1.)

ROOM #	FUNCTION OF SPACE	OCCUPANCY	OCCUPANT LOAD FACTOR	GROSS FLOOR AREA	TOTAL OCCUPANTS (PERSONS)
100	SEATING/ LOUNGE	ASSEMBLY (A-2)	15 GSF PER PERSON	1,021 GSF	68
101	CONCIERGE	BUSINESS (B)	100 GSF PER PERSON	21 GSF	1
102	SUNDRIES	BUSINESS (B)	100 GSF PER PERSON	42 GSF	1
103	MEN'S BATHROOM	BUSINESS (B)	100 GSF PER PERSON	97 GSF	1
104	WOMEN'S BATHROOM	BUSINESS (B)	100 GSF PER PERSON	146 GSF	2
105	HOUSEKEEPING	STORAGE (S-2)	300 GSF PER PERSON	82 GSF	1
107	BAR/ COFFEE	ASSEMBLY (A-2)	15 GSF PER PERSON	829 GSF	55
108	LIBRARY	ASSEMBLY (A-2)	15 GSF PER PERSON	487 GSF	33
109	FRONT DESK	BUSINESS (B)	100 GSF PER PERSON	120 GSF	2
110	FRONT OFFICE	BUSINESS (B)	100 GSF PER PERSON	100 GSF	1
111	ADMINISTRATION	BUSINESS (B)	100 GSF PER PERSON	100 GSF	1
112	LUGGAGE STORAGE	STORAGE (S-1)	300 GSF PER PERSON	18 GSF	1
113	HOUSEKEEPING	STORAGE (S-2)	300 GSF PER PERSON	57 GSF	1
115	CLOSET	STORAGE (S-2)	300 GSF PER PERSON	10 GSF	1
A-101 THRU A-131	GUEST ROOMS	RESIDENTIAL-HOTEL (R-1)	200 GSF PER PERSON		60
	TOTAL				229 PERSONS

"CAMPTON" FIRST LEVEL OCCUPANT LOADS

ROOM #	FUNCTION OF SPACE	OCCUPANCY	OCCUPANT LOAD FACTOR	GROSS FLOOR AREA	TOTAL OCCUPANTS (PERSONS)
118	IT CLOSET	STORAGE (S-2)	300 GSF PER PERSON	40 GSF	1
121	MULTIFUNCTION ROOM	ASSEMBLY (A-2)	15 GSF PER PERSON	444 GSF	32
122	KITCHEN	BUSINESS (B)	100 GSF PER PERSON	243 GSF	3
124	INDOOR/OUTDOOR RESTAUR.	ASSEMBLY (A-2)	15 GSF PER PERSON	330 GSF	22
127	STORAGE	STORAGE (S-2)	300 GSF PER PERSON	40 GSF	1
128	GYM	ASSEMBLY (A-3)	50 GSF PER PERSON	320 GSF	7
129	KITCHEN PREP	BUSINESS (B)	100 GSF PER PERSON	255 GSF	3
130	WOMEN'S WC	BUSINESS (B)	100 GSF PER PERSON	138 GSF	2
131	MEN'S WC	BUSINESS (B)	100 GSF PER PERSON	138 GSF	2
132	STORAGE	STORAGE (S-2)	300 GSF PER PERSON	39 GSF	1
137	STORAGE	STORAGE (S-2)	300 GSF PER PERSON	35 GSF	1
B101-B117	GUESTROOMS	RESIDENTIAL-HOTEL (R-1)	200 GSF PER PERSON		32
	TOTAL				107 PERSONS

"POOL SUITES" FIRST LEVEL OCCUPANT LOADS

ROOM #	FUNCTION OF SPACE	OCCUPANCY	OCCUPANT LOAD FACTOR	GROSS FLOOR AREA	TOTAL OCCUPANTS (PERSONS)
C101-C104	GUESTROOMS	RESIDENTIAL-HOTEL (R-1)	200 GSF PER PERSON		9
138	ELECTRICAL ROOM	STORAGE (S-2)	300 GSF PER PERSON	35 GSF	1
	TOTAL				10 PERSONS

"HADDON HALL" 1ST FLOOR EGRESS CAPACITY PER OCCUPANT SERVED (FBC TABLE 1005.1 & NFPA TABLE 7.3.3.1)

H1.1	H1.2	H1.3	H1.4	H1.5	H1.6	H1.7	CUMULATIVE TOTAL OCCUPANTS	MINIMUM REQ. WIDTH (LEVEL)	PROVIDED	MINIMUM REQ. WIDTH (STAIRWAY & RAMPS)	PROVIDED
17 OCC.							17 OCC./ 1 EXIT = 17 OCC./EXIT	17 OCC. @ 0.2/OCC. = 3.4"	36"	17 OCC. @ .3 OCC. = 5.1"	36"
	16 OCC.						16 OCC./ 1 EXIT = 16 OCC./EXIT	16 OCC. @ 0.2/OCC. = 3.2"		16 OCC. @ .3 OCC. = 4.8"	
		28 OCC.					28 OCC./ 1 EXIT = 28 OCC./EXIT	28 OCC. @ 0.2/OCC. = 5.6"		28 OCC. @ .3 OCC. = 8.4"	
			55 OCC.				55 OCC./ 1 EXIT = 55 OCC./EXIT	55 OCC. @ 0.2/OCC. = 11.0"		55 OCC. @ .3 OCC. = 16.5"	
				73 OCC.			73 OCC./ 1 EXIT = 33 OCC./EXIT	73 OCC. @ 0.2/OCC. = 14.6"		73 OCC. @ .3 OCC. = 21.9"	
					37 OCC.		37 OCC./ 1 EXIT = 37 OCC./EXIT	37 OCC. @ 0.2/OCC. = 7.4"		37 OCC. @ .3 OCC. = 11.1"	
						15 OCC.	15 OCC./ 1 EXIT = 15 OCC./EXIT	15 OCC. @ 0.2/OCC. = 3.0"		15 OCC. @ .3 OCC. = 4.5"	

"CAMPTON" 1ST FLOOR EGRESS CAPACITY PER OCCUPANT SERVED (FBC TABLE 1005.1 & NFPA TABLE 7.3.3.1)

C1.1	C1.2	C1.3	C1.4	C1.5	C1.6	C1.7	C1.8	C1.9	C1.10	C1.11	CUMULATIVE TOTAL OCCUPANTS	MINIMUM REQ. WIDTH (DOOR/OPENING)	PROVIDED	MINIMUM REQ. WIDTH (STAIRWAY & RAMPS)	PROVIDED
3 OCC.											3 OCC./ 1 EXIT = 3 OCC./EXIT	3 OCC. @ 0.2/OCC. = 0.6	32"	3 OCC. @ .3 OCC. = 0.9"	36"
	5 OCC.										5 OCC./ 1 EXIT = 5 OCC./EXIT	5 OCC. @ 0.2/OCC. = 1"	32"	5 OCC. @ .3 OCC. = 1.5"	36"
		4 OCC.									4 OCC./ 1 EXIT = 4 OCC./EXIT	4 OCC. @ 0.2/OCC. = 0.8"	72"	4 OCC. @ .3 OCC. = 1.2"	36"
			4 OCC.								4 OCC./ 1 EXIT = 4 OCC./EXIT	4 OCC. @ 0.2/OCC. = 0.8"	72"	4 OCC. @ .3 OCC. = 1.2"	36"
				37 OCC.							37 OCC./ 1 EXIT = 37 OCC./EXIT	37 OCC. @ 0.2/OCC. = 7.4"	72"	37 OCC. @ .3 OCC. = 11.1"	36"
					6 OCC.						6 OCC./ 1 EXIT = 6 OCC./EXIT	6 OCC. @ 0.2/OCC. = 1.2"	72"	6 OCC. @ .3 OCC. = 1.8"	36"
						5 OCC.					5 OCC./ 1 EXIT = 5 OCC./EXIT	5 OCC. @ 0.2/OCC. = 1.0"	72"	5 OCC. @ .3 OCC. = 1.5"	36"
							5 OCC.				5 OCC./ 1 EXIT = 5 OCC./EXIT	5 OCC. @ 0.2/OCC. = 1.0"	36"	5 OCC. @ .3 OCC. = 1.5"	36"
								8 OCC.			8 OCC./ 1 EXIT = 8 OCC./EXIT	8 OCC. @ 0.2/OCC. = 1.6"	32"	8 OCC. @ .3 OCC. = 2.4"	36"
									8 OCC.		8 OCC./ 1 EXIT = 8 OCC./EXIT	8 OCC. @ 0.2/OCC. = 1.6"	72"	8 OCC. @ .3 OCC. = 2.4"	36"
										9 OCC.	9 OCC./ 1 EXIT = 9 OCC./EXIT	9 OCC. @ 0.2/OCC. = 1.8"	72"	9 OCC. @ .3 OCC. = 2.7"	36"

NOTES:
1. FOR SPRINKLER HEAD LOCATION REFER TO FIRE PROTECTION DRAWINGS; SEE FP SHEETS
2. REFER TO ELECTRICAL DRAWINGS FOR EMERGENCY LIGHTING.
3. A 44" CLEAR PATH MUST BE MAINTAINED ALONG EGRESS PATH.
4. ALL PAVING ALONG EGRESS PATH MUST COMPLY WITH F.F.P.C. 7.1.6.4
5. PROVIDE A SMOKE DETECTOR AND SOUNDER BASE AT EACH SIDE OF THE GUESTROOM DOOR AT UNIT NUMBERS: A101, A109, A123, A208, A2217, A236, A308, A317, A336 INTERCONNECT THEM TO INITIATE ALARMS IN UNISON.

FOR LIFE SAFETY PLAN NOTES AND LIFE SAFETY PLAN LEGEND SEE SHEET A100

REVISION 12a – MODIFICATIONS ONLY ON HADDON AND CAMPTON BUILDINGS
- DEMISING WALLS BETWEEN GUESTROOMS UNITS REVISED TO SHOW EXISTING ½-HOUR PARTITION
- DEMISING WALLS BETWEEN GUESTROOMS AND CORRIDORS REVISED TO SHOW EXISTING SMOKE PARTITIONS AT GUESTROOM CORRIDORS
- THE 20 MINUTE RATING HAS BEEN REMOVED FROM GUESTROOM CORRIDOR DOORS AS ONLY SMOKE TIGHT DOORS ARE REQUIRED
- STAIR ENCLOSURE IS SHOWN AS EN EXISTING 1-HOUR PARTITION
- DOORS AT EGRESS STAIRS HAVE BEEN LABELED AS 60 MINUTES
- EXISTING GUESTROOM DOORS OPENING INTO THE EGRESS STAIRS HAVE BEEN LABELED AS 60 MINUTES
- A 1-HOUR SEPARATION BETWEEN IT, STORAGE, AND HOUSEKEEPING ROOMS WITH A 45 MINUTE LABELED DOOR HAS BEEN NOTED THROUGHOUT

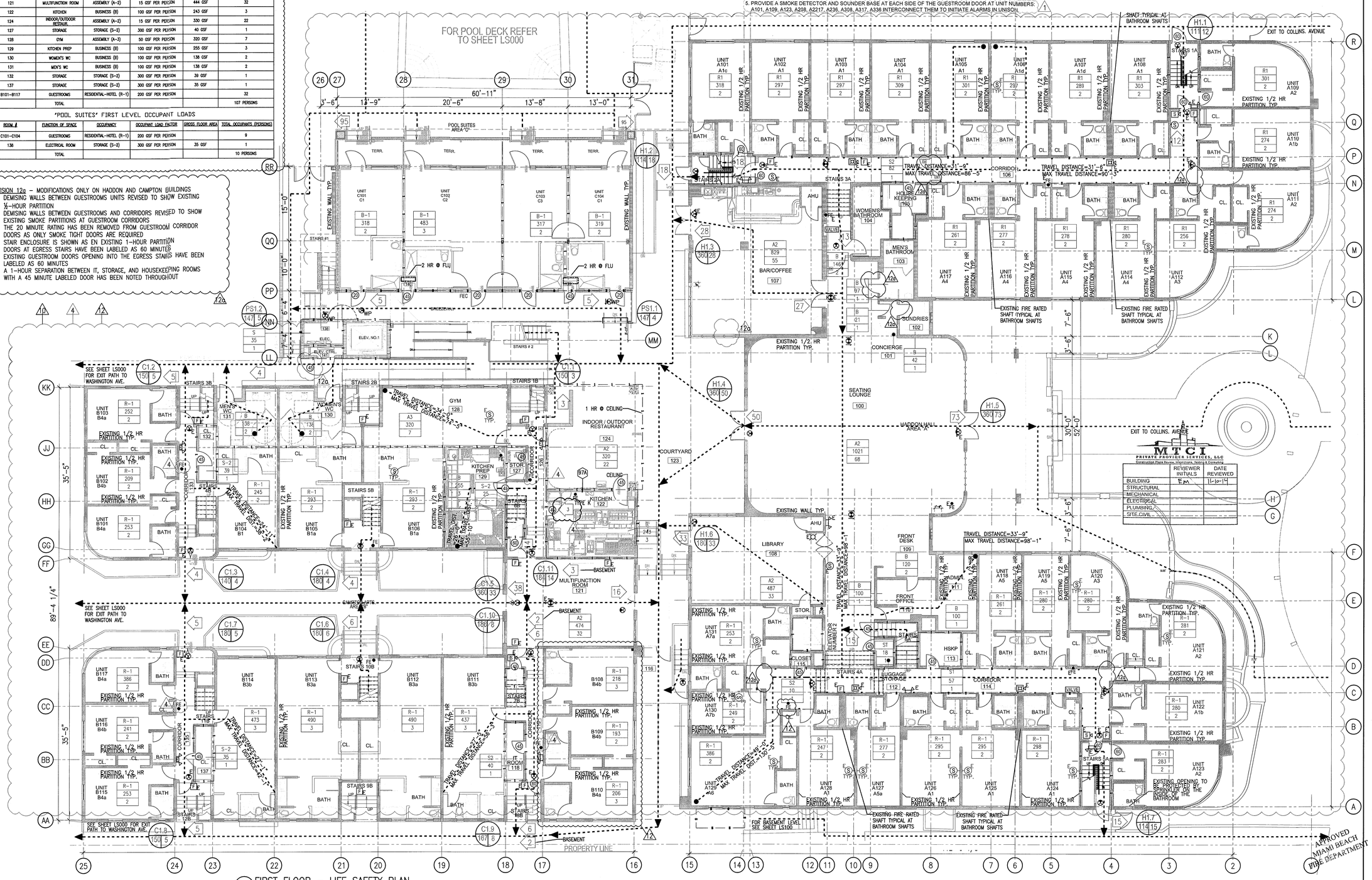

1 FIRST FLOOR – LIFE SAFETY PLAN
SCALE: 1/8" = 1'-0"

HADDON HALL
1500 COLLINS AVE
MIAMI BEACH, FL

KEYPLAN N.T.S.

REVISIONS

NO.	DESCRIPTION	ISSUE DATE
1	PROGRESS TO 100% CD	02-18-2014
4	FIRE REVIEW COMMENTS	04-01-2014
10	MASTER PERMIT COMMENTS	07-03-2014
12	FIRE & MTCI PERMIT COMMENTS	08-21-2014
12a	FIRE PERMIT COMMENTS	09-29-2014

100% CONSTRUCTION DOCUMENT SET

NORTH SEAL

10-9-14
Jonathan Cardello
Lic. # AR93391

ADD Inc Architecture Interiors Planning

One Biscayne Tower
Suite 1670
Two South
Biscayne Boulevard
Miami, Fl 33131
T. 305.482.8700
F. 305.482.8770
www.addinc.com
Lic. # AA26001507

Boston Miami

JOB NUMBER: 13036.00
CHECKED BY:
ISSUE DATE: FEBRUARY 18, 2014
SCALE: 1/8" = 1'-0"

SHEET TITLE

LIFE SAFETY PLAN
FIRST FLOOR

SHEET NUMBER

LS-101

COPYRIGHT ADD INC 2011

"HADDON HALL" 1ST FLOOR EGRESS CAPACITY PER OCCUPANT SERVED (FBC TABLE 1005.1 & NFPA TABLE 7.3.3.1)

H1.1	H1.2	H1.3	H1.4	H1.5	H1.6	H1.7	CUMULATIVE TOTAL OCCUPANTS	MINIMUM REQ. WIDTH (LEVEL)	PROVIDED	MINIMUM REQ. WIDTH (STAIRWAY & RAMPS)	PROVIDED
17 OCC.							17 OCC./ 1 EXIT = 17 OCC./EXIT	17 OCC. @ 0.2/OCC. = 3.4"	36"	17 OCC. @ .3 OCC. = 5.1"	36"
	16 OCC.						16 OCC./ 1 EXIT = 16 OCC./EXIT	16 OCC. @ 0.2/OCC. = 3.2"		16 OCC. @ .3 OCC. = 4.8"	
		28 OCC.					28 OCC./ 1 EXIT = 28 OCC./EXIT	28 OCC. @ 0.2/OCC. = 5.6"		28 OCC. @ .3 OCC. = 8.4"	
			55 OCC.				55 OCC./ 1 EXIT = 55 OCC./EXIT	55 OCC. @ 0.2/OCC. = 11.0"		55 OCC. @ .3 OCC. = 16.5"	
				57 OCC.			57 OCC./ 1 EXIT = 57 OCC./EXIT	57 OCC. @ 0.2/OCC. = 11.4"		57 OCC. @ .3 OCC. = 17.1"	
					37 OCC.		37 OCC./ 1 EXIT = 37 OCC./EXIT	37 OCC. @ 0.2/OCC. = 7.4"		37 OCC. @ .3 OCC. = 11.1"	
						15 OCC.	15 OCC./ 1 EXIT = 15 OCC./EXIT	15 OCC. @ 0.2/OCC. = 3.0"		15 OCC. @ .3 OCC. = 4.5"	

"HADDON HALL" 1ST FLOOR EGRESS CALCULATIONS

MAXIMUM OCCUPANCY (FBC TABLE 1004.1.1 & NFPA TABLE 7.3.1.)

ROOM #	FUNCTION OF SPACE	OCCUPANCY	OCCUPANT LOAD FACTOR	GROSS FLOOR AREA	TOTAL OCCUPANTS (PERSONS)
100	SEATING/ LOUNGE	ASSEMBLY (A-2)	15 GSF PER PERSON	1,021 GSF	68
101	CONCIERGE	BUSINESS (B)	100 GSF PER PERSON	21 GSF	1
102	SUNDRIES	BUSINESS (B)	100 GSF PER PERSON	42 GSF	1
103	MEN'S BATHROOM	BUSINESS (B)	100 GSF PER PERSON	97 GSF	1
104	WOMEN'S BATHROOM	BUSINESS (B)	100 GSF PER PERSON	146 GSF	2
105	HOUSEKEEPING	STORAGE (S-2)	300 GSF PER PERSON	82 GSF	1
107	BAR/ COFFEE	ASSEMBLY (A-2)	15 GSF PER PERSON	829 GSF	55
108	LIBRARY	ASSEMBLY (A-2)	15 GSF PER PERSON	550 GSF	37
109	FRONT DESK	BUSINESS (B)	100 GSF PER PERSON	120 GSF	2
110	FRONT OFFICE	BUSINESS (B)	100 GSF PER PERSON	100 GSF	1
111	ADMINISTRATION	BUSINESS (B)	100 GSF PER PERSON	100 GSF	1
112	LUGGAGE STORAGE	STORAGE (S-1)	300 GSF PER PERSON	18 GSF	1
113	HOUSEKEEPING	STORAGE (S-2)	100 GSF PER PERSON	57 GSF	1
115	CLOSET	STORAGE (S-2)	300 GSF PER PERSON	10 GSF	1
A-101 THRU A-131	GUEST ROOMS	RESIDENTIAL-HOTEL (R-1)	200 GSF PER PERSON		60
117	KITCHEN	BUSINESS (B)	100 GSF PER PERSON	675 GSF	7
118	CLOSET	STORAGE (S-2)	100 GSF PER PERSON	40 GSF	1
121	MULTIFUNCTION ROOM	ASSEMBLY (A-2)	15 GSF PER PERSON	375 GSF	25
122	JUICE BAR	ASSEMBLY (A-2)	15 GSF PER PERSON	243 GSF	17
124	INDOOR/OUTDOOR RESTAUR.	ASSEMBLY (A-2)	15 GSF PER PERSON	402 GSF	27
127	STORAGE	STORAGE (S-2)	100 GSF PER PERSON	40 GSF	1
128	GYM	ASSEMBLY (A-3)	50 GSF PER PERSON	336 GSF	7
130	WOMEN'S WC	BUSINESS (B)	100 GSF PER PERSON	138 GSF	2
132	MEN'S WC	BUSINESS (B)	100 GSF PER PERSON	138 GSF	2
137	STORAGE	STORAGE (S-2)	100 GSF PER PERSON	50 GSF	1
138	ELECTRICAL ROOM	STORAGE (S-2)	100 GSF PER PERSON	45 GSF	1
B101-B117	GUESTROOMS	RESIDENTIAL-HOTEL (R-1)	200 GSF PER PERSON		32
C101-C104	GUESTROOMS	RESIDENTIAL-HOTEL (R-1)	200 GSF PER PERSON		9
	TOTAL				365 PERSONS

"HADDON HALL" 1ST FLOOR EGRESS CAPACITY PER OCCUPANT SERVED (FBC TABLE 1005.1 & NFPA TABLE 7.3.3.1)

H1.1	H1.2	H1.3	H1.4	H1.5	H1.6	H1.7	CUMULATIVE TOTAL OCCUPANTS	MINIMUM REQ. WIDTH (LEVEL)	PROVIDED	MINIMUM REQ. WIDTH (STAIRWAY & RAMPS)	PROVIDED
17 OCC.							17 OCC./ 1 EXIT = 17 OCC./EXIT	17 OCC. @ 0.2/OCC. = 3.4"	36"	17 OCC. @ .3 OCC. = 5.1"	36"
	16 OCC.						16 OCC./ 1 EXIT = 16 OCC./EXIT	16 OCC. @ 0.2/OCC. = 3.2"		16 OCC. @ .3 OCC. = 4.8"	
		28 OCC.					28 OCC./ 1 EXIT = 28 OCC./EXIT	28 OCC. @ 0.2/OCC. = 5.6"		28 OCC. @ .3 OCC. = 8.4"	
			55 OCC.				55 OCC./ 1 EXIT = 55 OCC./EXIT	55 OCC. @ 0.2/OCC. = 11.0"		55 OCC. @ .3 OCC. = 16.5"	
				57 OCC.			57 OCC./ 1 EXIT = 57 OCC./EXIT	57 OCC. @ 0.2/OCC. = 11.4"		57 OCC. @ .3 OCC. = 17.1"	
					37 OCC.		37 OCC./ 1 EXIT = 37 OCC./EXIT	37 OCC. @ 0.2/OCC. = 7.4"		37 OCC. @ .3 OCC. = 11.1"	
						15 OCC.	15 OCC./ 1 EXIT = 15 OCC./EXIT	15 OCC. @ 0.2/OCC. = 3.0"		15 OCC. @ .3 OCC. = 4.5"	

1 FIRST FLOOR - EGRESS CAPACITY & EGRESS CALCULATION CHARTS
SCALE: 1/8" = 1'-0"

"CAMPTON" 1ST FLOOR EGRESS CALCULATIONS

117	KITCHEN	BUSINESS (B)	200 GSF PER PERSON	430 GSF	3
118	CLOSET	STORAGE (S-2)	300 GSF PER PERSON	40 GSF	1
120	STORAGE	STORAGE (S-2)	300 GSF PER PERSON	15 GSF	1
121	MULTI-FUNCTION ROOM	ASSEMBLY (A-2)	15 GSF PER PERSON	375 GSF	25
122	JUICE BAR	ASSEMBLY (A-2)	15 GSF PER PERSON	243 GSF	17
124	RESTAURANT	ASSEMBLY (A-2)	15 GSF PER PERSON	1,590 GSF	106
125					
127					
128	GYM	BUSINESS (B)	200 GSF PER PERSON	336 GSF	2
B-101 THRU B-117	GUEST ROOMS	RESIDENTIAL-HOTEL (R-1)	200 GSF PER PERSON		28
	TOTAL				153 PERSONS

"CAMPTON" 1ST FLOOR EGRESS CAPACITY PER OCCUPANT SERVED (FBC TABLE 1005.1 & NFPA TABLE 7.3.3.1)

C1.1	C1.2	C1.3	C1.4	C1.5	C1.6	C1.7	C1.8	C1.9	CUMULATIVE TOTAL OCCUPANTS	MINIMUM REQ. WIDTH (DOOR/OPENING)	PROVIDED	MINIMUM REQ. WIDTH (STAIRWAY & RAMPS)	PROVIDED
12 OCC.									22 OCC./ 1 EXIT = 83 OCC./EXIT	22 OCC. @ 0.2/OCC. = 4.4"	32"	22 OCC. @ .3 OCC. = 6.6"	32"
	5 OCC.								23 OCC./ 1 EXIT = 82 OCC./EXIT	23 OCC. @ 0.2/OCC. = 6.6"	32"	23 OCC. @ .3 OCC. = 6.9	32"
		4 OCC.							4 OCC./ 1 EXIT = 4 OCC./EXIT	4 OCC. @ 0.2/OCC. = 0.8"	72"	4 OCC. @ .3 OCC. = 1.2"	
			4 OCC.						4 OCC./ 1 EXIT = 4 OCC./EXIT	4 OCC. @ 0.2/OCC. = 0.8"	72"	4 OCC. @ .3 OCC. = 1.2"	
				37 OCC.					37 OCC./ 1 EXIT = 37 OCC./EXIT	37 OCC. @ 0.2/OCC. = 7.4"	72"	37 OCC. @ .3 OCC. = 11.1"	
					6 OCC.				6 OCC./ 1 EXIT = 6 OCC./EXIT	6 OCC. @ 0.2/OCC. = 1.2"	72"	6 OCC. @ .3 OCC. = 1.8"	
						5 OCC.			5 OCC./ 1 EXIT = 5 OCC./EXIT	5 OCC. @ 0.2/OCC. = 1.0"	72"	5 OCC. @ .3 OCC. = 1.5"	
							4 OCC.		4 OCC./ 1 EXIT = 4 OCC./EXIT	4 OCC. @ 0.2/OCC. = 0.8"	36"	4 OCC. @ .3 OCC. = 1.2"	
								23 OCC.	23 OCC./ 1 EXIT = 23 OCC./EXIT	23 OCC. @ 0.2/OCC. = 4.6"	32"	23 OCC. @ .3 OCC. = 6.9"	34"

"POOL SUITES" 1ST FLOOR EGRESS CALCULATIONS

132	ELEVATOR EQUIPMENT RM.	BUSINESS (B)	200 GSF PER PERSON	61 GSF	1
C-101 THRU C-105	GUEST ROOMS	RESIDENTIAL-HOTEL (R-1)	200 GSF PER PERSON		10
	TOTAL				11 PESONS

"POOL SUITES" 1ST FLOOR EGRESS CAPACITY PER OCCUPANT SERVED (FBC TABLE 1005.1 & NFPA TABLE 7.3.3.1)

PS1.1	PS1.2	CUMULATIVE TOTAL OCCUPANTS	MINIMUM REQ. WIDTH (LEVEL)	PROVIDED	MINIMUM REQ. WIDTH (STAIRWAY & RAMPS)	PROVIDED
5 OCC.		5 OCC./ 1 EXIT = 5 OCC./EXIT	5 OCC. @ 0.2/OCC. = 1.0"	36"	5 OCC. @ .3 OCC. = 1.5"	36"
	5 OCC.	5 OCC./ 1 EXIT = 5 OCC./EXIT	5 OCC. @ 0.2/OCC. = 1.0"	72"	5 OCC. @ .3 OCC. = 1.5	36"

MTCI
PRIVATE PROVIDER SERVICES, LLC
Construction Plans Review, Inspections, Testing & Consulting

	REVIEWER INITIALS	DATE REVIEWED
BUILDING	EM	11-10-14
STRUCTURAL		
MECHANICAL		
ELECTRICAL		
PLUMBING		
SITE CIVIL		

APPROVED
MIAMI BEACH
FIRE DEPARTMENT

HADDON HALL
1500 COLLINS AVE
MIAMI BEACH, FL

KEYPLAN N.T.S.

REVISIONS

NO.	DESCRIPTION	ISSUE DATE
1	PROGRESS TO 100% CD	02-18-2014
4	FIRE REVIEW COMMENTS	04-01-2014

100% CONSTRUCTION DOCUMENT SET

SEAL

Jonathan Cardello
Lic. # AR93391

ADD Inc Architecture Interiors Planning

One Biscayne Tower
Suite 1670
Two South
Biscayne Boulevard
Miami, Fl 33131
T. 305.482.8700
F. 305.482.8770
www.addinc.com
Lic. # AA26001507

Boston Miami

JOB NUMBER: 13036.00
CHECKED BY:
ISSUE DATE: FEBRUARY 18, 2014
SCALE: 1/8" = 1'-0"

SHEET TITLE

FIRST FLOOR EGRESS CAPACITY CALCULATION CHARTS

SHEET NUMBER

LS-101A

COPYRIGHT ADD INC 2011

TRAVEL DISTANCE, COMMON PATH OF TRAVEL, DEAD-END LIMIT (FBC 1013.3, 1015.1, & NFPA A.7.6) - SPRINKLERED				
OCCUPANCY CLASSIFICATION	FUNCTION OF SPACE	TRAVEL DISTANCE TO EXITS	COMMON PATHS OF TRAVEL	DEAD-END LIMIT
RESIDENTIAL (R-1)	HOTEL	200 FT.	125 FT. (IN UNIT) / 50 FT.	20 FT.

'HADDON HALL' SECOND LEVEL OCCUPANT LOADS					
MAXIMUM OCCUPANCY (FBC TABLE 1004.1.1 & NFPA TABLE 7.3.1.)					
ROOM #	FUNCTION OF SPACE	OCCUPANCY	OCCUPANT LOAD FACTOR	GROSS FLOOR AREA	TOTAL OCCUPANTS (PERSONS)
A-201 THRU A-213, & A-214 THRU A-244	GUEST ROOMS	RESIDENTIAL-HOTEL (R-1)	200 GSF PER PERSON		86
201	IT ROOM	STORAGE (S-2)	300 GSF PER PERSON	134 GSF	1
203	MAID'S CLOSET	STORAGE (S-2)	300 GSF PER PERSON	50 GSF	1
204	STORAGE	STORAGE (S-2)	300 GSF PER PERSON	50 GSF	1
	TOTAL				89 PESONS

'CAMPTON' SECOND LEVEL OCCUPANT LOADS					
ROOM #	FUNCTION OF SPACE	OCCUPANCY	OCCUPANT LOAD FACTOR	GROSS FLOOR AREA	TOTAL OCCUPANTS (PERSONS)
B-201 THRU B-220	GUEST ROOMS	RESIDENTIAL-HOTEL (R-1)	200 GSF PER PERSON		48
206	CLOSET	STORAGE (S-2)	300 GSF PER PERSON	27 GSF	1
208	CLOSET	STORAGE (S-2)	300 GSF PER PERSON	28 GSF	1
211	CLOSET	STORAGE (S-2)	300 GSF PER PERSON	29 GSF	1
213	CLOSET	STORAGE (S-2)	300 GSF PER PERSON	29 GSF	1
	TOTAL				52 PESONS

'POOL SUITES' THIRD LEVEL OCCUPANT LOADS					
MAXIMUM OCCUPANCY (FBC TABLE 1004.1.1 & NFPA TABLE 7.3.1.)					
ROOM #	FUNCTION OF SPACE	OCCUPANCY	OCCUPANT LOAD FACTOR	GROSS FLOOR AREA	TOTAL OCCUPANTS (PERSONS)
C-101 THRU C-105	GUEST ROOMS	RESIDENTIAL-HOTEL (R-1)	200 GSF PER PERSON		9
	TOTAL				9 PERSONS

12 10

'HADDON HALL' 3RD FLOOR EGRESS CAPACITY PER OCCUPANT SERVED (FBC TABLE 1005.1 & NFPA TABLE 7.3.3.1)								
H3.1	H3.2	H3.3	CUMULATIVE TOTAL OCCUPANTS	MINIMUM REQ. WIDTH (LEVEL)	PROVIDED	MINIMUM REQ. WIDTH (STAIRWAY & RAMPS)	PROVIDED
29 OCC.			29 OCC./ 1 EXIT = 29 OCC./EXIT	29 OCC. @ 0.2/OCC. = 5.8"	32"	29 OCC. @ .3 OCC. = 8.7"	34"
	30 OCC.		30 OCC./ 1 EXIT = 30 OCC./EXIT	30 OCC. @ 0.2/OCC. = 6"	32"	30 OCC. @ .3 OCC. = 9"	34"
		30 OCC.	30 OCC./ 1 EXIT = 30 OCC./EXIT	30 OCC. @ 0.2/OCC. = 6"	32"	30 OCC. @ .3 OCC. = 9"	34"

'POOL SUITES' 2ND FLOOR EGRESS CAPACITY PER OCCUPANT SERVED (FBC TABLE 1005.1 & NFPA TABLE 7.3.3.1)							
PS2.1	PS2.2	CUMULATIVE TOTAL OCCUPANTS	MINIMUM REQ. WIDTH (LEVEL)	PROVIDED	MINIMUM REQ. WIDTH (STAIRWAY & RAMPS)	PROVIDED
5 OCC.		5 OCC./ 1 EXIT = 5 OCC./EXIT	5 OCC. @ 0.2/OCC. = 1.0"	36"	5 OCC. @ .3 OCC. = 1.5"	36"
	4 OCC.	4 OCC./ 1 EXIT = 4 OCC./EXIT	4 OCC. @ 0.2/OCC. = 0.8"	72"	4 OCC. @ .3 OCC. = 1.2	36"

'CAMPTON ' 2ND FLOOR EGRESS CAPACITY PER OCCUPANT SERVED (FBC TABLE 1005.1 & NFPA TABLE 7.3.3.1)													
C2.1	C2.2	C2.3	C2.4	C2.5	C2.6	C2.7	C2.8	C2.9	CUMULATIVE TOTAL OCCUPANTS	MINIMUM REQ. WIDTH (LEVEL)	PROVIDED	MINIMUM REQ. WIDTH (STAIRWAY & RAMPS)	PROVIDED
5 OCC.									5 OCC./ 1 EXIT = 5 OCC./EXIT	5 OCC. @ 0.2/OCC. = 1.0"	36"	5 OCC. @ .3 OCC. = 1.5"	36"
	5 OCC.								5 OCC./ 1 EXIT = 5 OCC./EXIT	5 OCC. @ 0.2/OCC. = 1.0"	36"	5 OCC. @ .3 OCC. = 1.5"	36"
		5 OCC.							5 OCC./ 1 EXIT = 5 OCC./EXIT	5 OCC. @ 0.2/OCC. = 1.0"	36"	4 OCC. @ .3 OCC. = 1.2"	36"
			6 OCC.						6 OCC./ 1 EXIT = 6 OCC./EXIT	OCC. @ 0.2/OCC. = 1.2"	36"	6 OCC. @ .3 OCC. = 1.8"	36"
				4 OCC.					4 OCC./ 1 EXIT = 4 OCC./EXIT	4 OCC. @ 0.2/OCC. = .8"	36"	4 OCC. @ .3 OCC. = 1.2"	36"
					5 OCC.				5 OCC./ 1 EXIT = 5 OCC./EXIT	5 OCC. @ 0.2/OCC. = 1.0"	36"	5 OCC. @ .3 OCC. = 1.5"	36"
						5 OCC.			5 OCC./ 1 EXIT = 5 OCC./EXIT	5 OCC. @ 0.2/OCC. = 1.0"	36"	5 OCC. @ .3 OCC. = 1.5"	36"
							5 OCC.		5 OCC./ 1 EXIT = 5 OCC./EXIT	5 OCC. @ 0.2/OCC. = 1.0"	36"	5 OCC. @ .3 OCC. = 1.5"	36"
								5 OCC.	5 OCC./ 1 EXIT = 5 OCC./EXIT	5 OCC. @ 0.2/OCC. = 1.0"	36"	5 OCC. @ .3 OCC. = 1.5"	36"

10 12

FOR LIFE SAFETY PLAN NOTES AND LIFE SAFETY PLAN LEGEND SEE SHEET A100

NOTES:
1. FOR SPRINKLER HEAD LOCATION REFER TO FIRE PROTECTION DRAWINGS; SEE FP SHEETS
2. REFER TO ELECTRICAL DRAWINGS FOR EMERGENCY LIGHTING.
3. A 44" CLEAR PATH MUST BE MAINTAINED ALONG EGRESS PATH.
4. ALL PAVING ALONG EGRESS PATH MUST COMPLY WITH F.F.P.C. 7.1.6.4.
5. PROVIDE A SMOKE DETECTOR AND SOUNDER BASE AT EACH SIDE OF THE GUESTROOM DOOR AT UNIT NUMBERS: A101, A109, A123, A208, A2217, A236, A308, A317, A336 INTERCONNECT THEM TO INITIATE ALARMS IN UNISON.

1

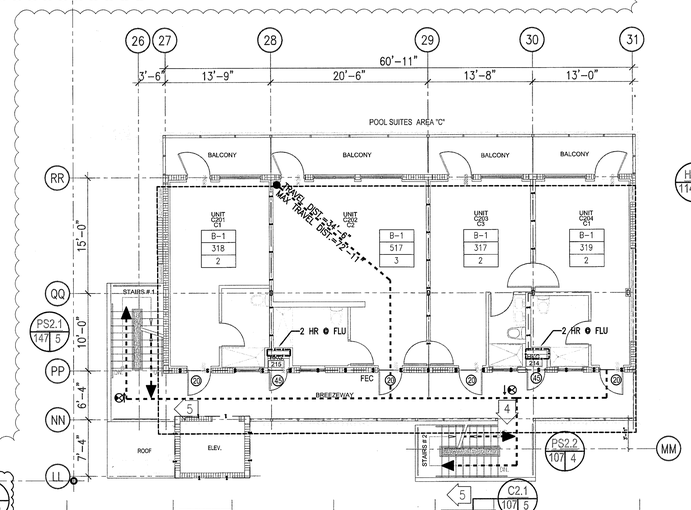

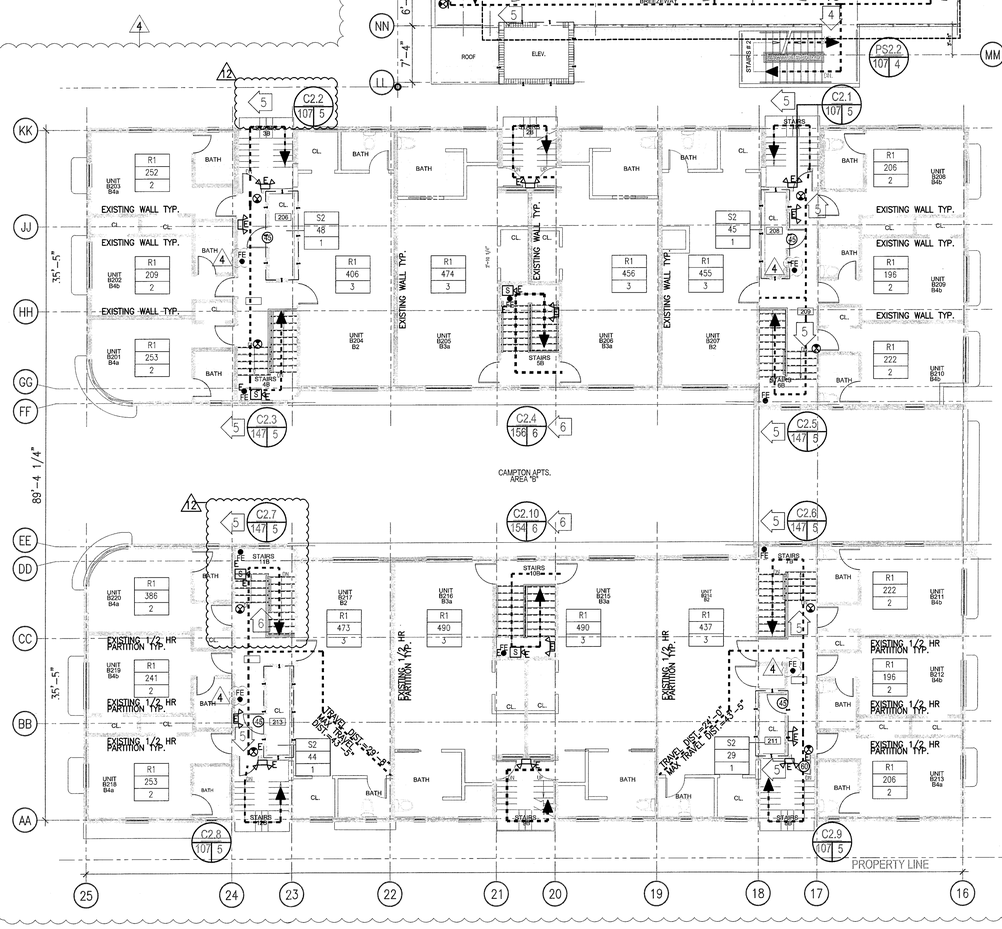

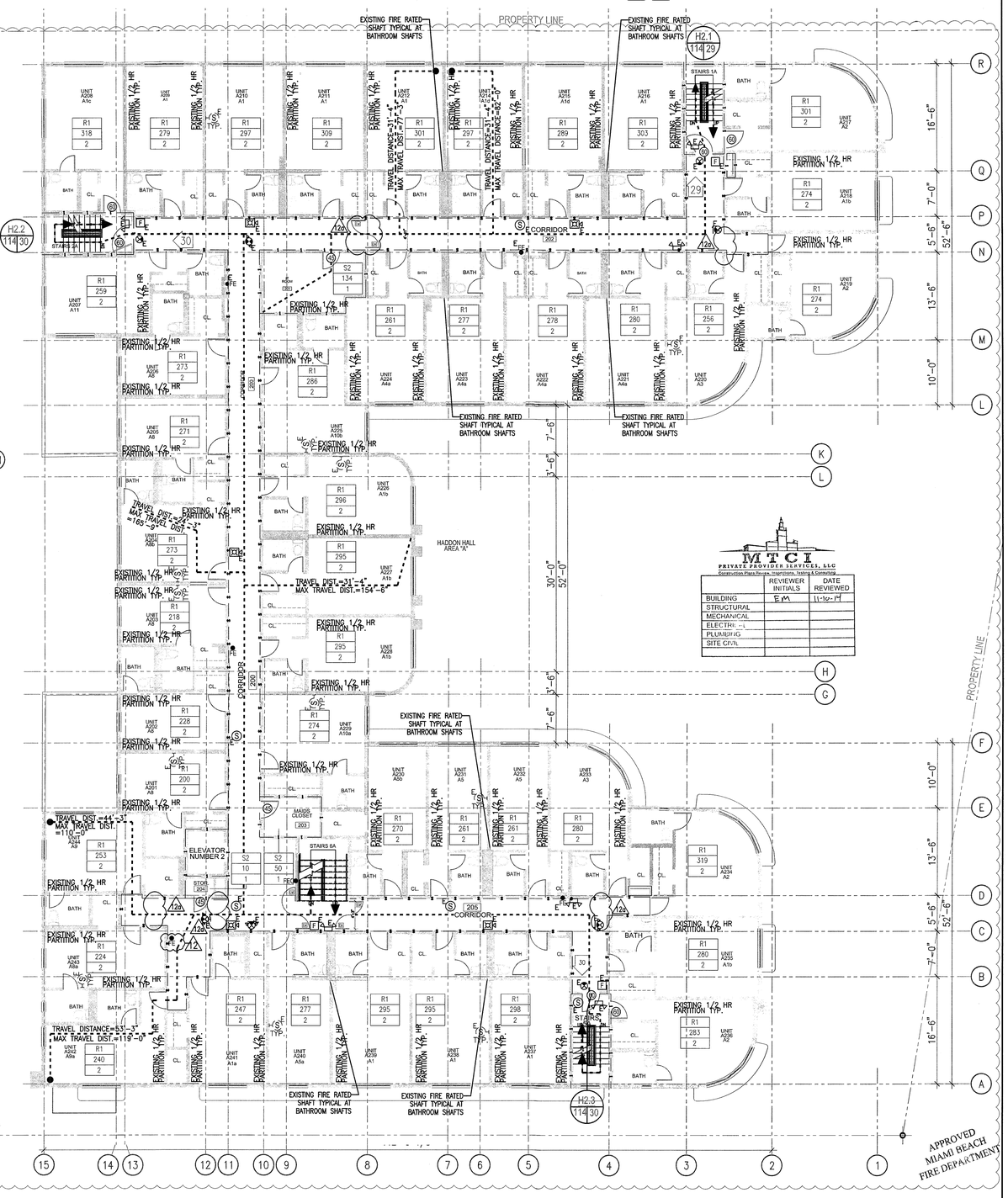

1 SECOND FLOOR - LIFE SAFETY PLAN
SCALE: 1/8" = 1'-0"

REVISION 12a - MODIFICATIONS ONLY ON HADDON AND CAMPTON BUILDINGS
- DEMISING WALLS BETWEEN GUESTROOMS UNITS REVISED TO SHOW EXISTING ½-HOUR PARTITION
- DEMISING WALLS BETWEEN GUESTROOMS AND CORRIDORS REVISED TO SHOW EXISTING SMOKE PARTITIONS AT GUESTROOM CORRIDORS
- THE 20 MINUTE RATING HAS BEEN REMOVED FROM GUESTROOM CORRIDOR DOORS AS ONLY SMOKE TIGHT DOORS ARE REQUIRED
- STAIR ENCLOSURE IS SHOWN AS EN EXISTING 1-HOUR PARTITION
- DOORS AT EGRESS STAIRS HAVE BEEN LABELED AS 60 MINUTES
- EXISTING GUESTROOM DOORS OPENING INTO THE EGRESS STAIRS HAVE BEEN LABELED AS 60 MINUTES
- A 1-HOUR SEPARATION BETWEEN IT, STORAGE, AND HOUSEKEEPING ROOMS WITH A 45 MINUTE LABELED DOOR HAS BEEN NOTED THROUGHOUT

12a

HADDON HALL
1500 COLLINS AVE
MIAMI BEACH, FL

KEYPLAN N.T.S.

REVISIONS

NO.	DESCRIPTION	ISSUE DATE
1	PROGRESS TO 100% CD	02-18-2014
4	FIRE REVIEW COMMENTS	04-01-2014
10	MASTER PERMIT COMMENTS	07-03-2014
12	FIRE & MTCI PERMIT COMMENTS	08-21-2014
12a	FIRE PERMIT COMMENTS	09-29-2014

MTCI PRIVATE PROVIDER SERVICES, LLC
Construction Plans Review, Inspections, Testing & Consulting

	REVIEWER INITIALS	DATE REVIEWED
BUILDING	EM	11-10-14
STRUCTURAL		
MECHANICAL		
ELECTRICAL		
PLUMBING		
SITE CIVIL		

100% CONSTRUCTION DOCUMENT SET

NORTH

SEAL
10-9-14
Jonathan Cardello
Lic. # AR93391

ADD Inc Architecture Interiors Planning

One Biscayne Tower
Suite 1670
Two South
Biscayne Boulevard
Miami, Fl 33131
T. 305.482.8700
F. 305.482.8770
www.addinc.com
Lic. # AA26001507

Boston Miami

JOB NUMBER:	13036.00
CHECKED BY:	
ISSUE DATE:	FEBRUARY 18, 2014
SCALE:	1/8" = 1'-0"

SHEET TITLE

LIFE SAFETY PLAN
SECOND FLOOR

SHEET NUMBER

LS-102

COPYRIGHT ADD INC 2011

TRAVEL DISTANCE, COMMON PATH OF TRAVEL, DEAD-END LIMIT (FBC 1013.3, 1015.1, & NFPA 7.7.6) - SPRINKLERED				
OCCUPANCY CLASSIFICATION	FUNCTION OF SPACE	TRAVEL DISTANCE TO EXITS	COMMON PATHS OF TRAVEL	DEAD-END LIMIT
RESIDENTIAL (R-1)	HOTEL	200 FT.	125 FT. (IN UNIT) / 50 FT.	20 FT.

'HADDON HALL' THIRD LEVEL OCCUPANT LOADS

MAXIMUM OCCUPANCY (FBC TABLE 1004.1.1 & NFPA TABLE 7.3.1.)

ROOM #	FUNCTION OF SPACE	OCCUPANCY	OCCUPANT LOAD FACTOR	GROSS FLOOR AREA	TOTAL OCCUPANTS (PERSONS)
A-301 THRU A-313, & A-314 THRU A-344	GUEST ROOMS	RESIDENTIAL-HOTEL (R-1)	200 GSF PER PERSON		86
301	IT ROOM	STORAGE (S-2)	300 GSF PER PERSON	134 GSF	1
303	MAID'S CLOSET	STORAGE (S-2)	300 GSF PER PERSON	50 GSF	1
304	CLOSET	STORAGE (S-2)	300 GSF PER PERSON	11 GSF	1
	TOTAL				89

'POOL SUITES' THIRD LEVEL OCCUPANT LOADS

MAXIMUM OCCUPANCY (FBC TABLE 1004.1.1 & NFPA TABLE 7.3.1.)

ROOM #	FUNCTION OF SPACE	OCCUPANCY	OCCUPANT LOAD FACTOR	GROSS FLOOR AREA	TOTAL OCCUPANTS (PERSONS)
C-101 THRU C-105	GUEST ROOMS	RESIDENTIAL-HOTEL (R-1)	200 GSF PER PERSON		9
	TOTAL				9 PERSONS

'CAMPTON' THIRD LEVEL OCCUPANT LOADS

MAXIMUM OCCUPANCY (FBC TABLE 1004.1.1 & NFPA TABLE 7.3.1.)

ROOM #	FUNCTION OF SPACE	OCCUPANCY	OCCUPANT LOAD FACTOR	GROSS FLOOR AREA	TOTAL OCCUPANTS (PERSONS)
UTILITY ROOM NORTH	STORAGE	STORAGE (S-2)	300 GSF PER PERSON	73 GSF	2
UTILITY ROOM SOUTH	STORAGE	STORAGE (S-2)	300 GSF PER PERSON	73 GSF	2
	TOTAL				4 PERSONS

'POOL SUITES' 3RD FLOOR EGRESS CALCULATIONS

C-101 THRU C-105	GUEST ROOMS	RESIDENTIAL-HOTEL (R-1)	200 GSF PER PERSON	10
	TOTAL			11 PERSONS

'POOL SUITES' 3RD FLOOR EGRESS CAPACITY PER OCCUPANT SERVED (FBC TABLE 1005.1 & NFPA TABLE 7.3.3.1)

PS3.1	PS3.2	CUMULATIVE TOTAL OCCUPANTS	MINIMUM REQ. WIDTH (LEVEL)	PROVIDED	MINIMUM REQ. WIDTH (STAIRWAY & RAMPS)	PROVIDED
5 OCC.		5 OCC./ 1 EXIT = 5 OCC./EXIT	5 OCC. @ 0.2/OCC. = 1.0"	36"	5 OCC. @ .3 OCC. = 1.5"	36"
	4 OCC.	4 OCC./ 1 EXIT = 4 OCC./EXIT	4 OCC. @ 0.2/OCC. = 0.8"	72"	4 OCC. @ .3 OCC. = 1.2	36"

NOTES:
1. FOR SPRINKLER HEAD LOCATION REFER TO FIRE PROTECTION DRAWINGS; SEE FP SHEETS
2. REFER TO ELECTRICAL DRAWINGS FOR EMERGENCY LIGHTING.
3. A 44" CLEAR PATH MUST BE MAINTAINED ALONG EGRESS PATH.
4. ALL PAVING ALONG EGRESS PATH MUST COMPLY WITH F.F.P.C. 7.1.6.4
5. PROVIDE A SMOKE DETECTOR AND SOUNDER BASE AT EACH SIDE OF THE GUESTROOM DOOR AT UNIT NUMBERS: A101, A109, A123, A208, A2217, A238, A308, A317, A338 INTERCONNECT THEM TO INITIATE ALARMS IN UNISON.

REVISION 12a – MODIFICATIONS ONLY ON HADDON AND CAMPTON BUILDINGS
- DEMISING WALLS BETWEEN GUESTROOMS UNITS REVISED TO SHOW EXISTING ½-HOUR PARTITION
- DEMISING WALLS BETWEEN GUESTROOMS AND CORRIDORS REVISED TO SHOW EXISTING SMOKE PARTITIONS AT GUESTROOM CORRIDORS
- THE 20 MINUTE RATING HAS BEEN REMOVED FROM GUESTROOM CORRIDOR DOORS AS ONLY SMOKE TIGHT DOORS ARE REQUIRED
- STAIR ENCLOSURE IS SHOWN AS EN EXISTING 1-HOUR PARTITION
- DOORS AT EGRESS STAIRS HAVE BEEN LABELED AS 60 MINUTES
- EXISTING GUESTROOM DOORS OPENING INTO THE EGRESS STAIRS HAVE BEEN LABELED AS 60 MINUTES
- A 1-HOUR SEPARATION BETWEEN IT, STORAGE, AND HOUSEKEEPING ROOMS WITH A 45 MINUTE LABELED DOOR HAS BEEN NOTED THROUGHOUT

LIFE SAFETY PLAN NOTES

1. ALL PENETRATIONS THROUGH FIRE-RATED PARTITIONS AND BARRIERS MUST BE BUILT ACCORDING TO THE UL-LISTED FIRE-RESISTANCE DIRECTORY'S DESIGNS.
2. ALL PENETRATIONS THROUGH SMOKE-RATED PARTITIONS AND BARRIERS MUST UTILIZE PRODUCTS TO RESIST THE PASSAGE OF AIR AND SMOKE.
3. PORTABLE FIRE EXTINGUISHERS SHALL BE PROVIDED IN EVERY ASSEMBLY OCCUPANCY IN ACCORDANCE NFPA 10 (STANDARD FOR PORTABLE FIRE EXTINGUISHERS) PER N.F.P.A. 101 9.7.4.1. THE QUANTITY AND LOCATIONS WILL BE REVIEWED AND APPROVED WITH THE AUTHORITY HAVING JURISDICTION.
4. NO DUCTS, PIPING, OR CONDUITS WILL BE PERMITTED WITHIN THE EXIT STAIR ENCLOSURE UNLESS THEY SERVE THE STAIR.
5. LIFE SAFETY DRAWINGS TO SUPERCEDE ALL OTHER DISCIPLINES.
6. FIRE ALARM AND SPRINKLERS WORK IS INCLUDED WITHIN SCOPE OF THESE ROOMS.
7. EXISTING WALLS NOT IN SCOPE OF WORK UNLESS OTHERWISE NOTED WITH RATING SYMBOL.
8. EXISTING SMOKE DETECTORS OCCUR IN ALL HADDON HALL AND CAMPTON APARTMENT GUESTROOMS. NEW SMOKE DETECTORS TO BE PROVIDED IN POOL SUITES BUILDING AND RECONFIGURED CAMPTON ROOMS
9. ANY GATES ALONG THE MEANS OF EGRESS MUST BE OPERABLE WITHOUT THE USE OF A KEY, TOOL OR SPECIAL KNOWLEDGE.
10. ANY DOOR S SWINGING INTO THE REQUIRED MEANS OF EGRESS MUST BE SELF CLOSING.

These drawings do not depict and/or provide design direction for specific fire protection systems within the City of Miami Beach. These drawings do indicate rated fire and fire/smoke barriers, rated horizontal and vertical exit enclosures, smoke partitions, exit access passageways and other fire and life safety architectural features as required by local authority having jurisdiction (City of Miami Beach Fire Department and City of Miami Beach Building Department), Florida Building Code, 2004 Edition (FBC), and the applicable codes and standards referenced within the FBC for the type occupancy.

These drawings provide general guidance to design professionals and indicate fire and fire/smoke separations for the purpose of designing smoke management zones, automatic suppression zones and emergency voice alarm communication zones which are to be in concert with architectural fire & life safety features, as required by code.

*FOR EGRESS SUMMARY CHART & OCCUPANT LOAD CALCULATIONS REFER TO LS-105

LIFE SAFETY PLAN LEGEND

- CUMULATIVE NUMBER OF OCCUPANTS ALONG EGRESS PATH
- FUNCTION OF SPACE
- GROSS FLOOR AREA (SF)
- ROOM OCCUPANT LOAD FACTOR (TABLE 1004.1.1)
- EXIT NUMBER
- USE/ # OF OCCUPANTS
- CAPACITY OF OCCUPANTS
- EXIT NUMBER
- MINIMUM EGRESS WIDTH REQUIRED
- EGRESS WIDTH PROVIDED
- MINIMUM STAIR WIDTH REQUIRED
- STAIR WIDTH PROVIDED
- SMOKE PARTITION
- ONE HOUR FIRE RATING
- TWO HOUR FIRE RATING
- THREE HOUR FIRE RATING
- FOUR HOUR FIRE RATING
- DOOR RESISTS THE PASSAGE OF SMOKE
- 20 MIN. RATED DOOR ASSEMBLY
- 45 MIN. RATED CLASS "C" DOOR ASSEMBLY
- 1 1/2 HR. RATED CLASS "B" DOOR ASSEMBLY
- 3 HR. RATED CLASS "A" DOOR ASSEMBLY
- CEILING MOUNTED
- WALL MOUNTED
- FIRE EXTINGUISHER CABINET
- BRACKET MOUNTED FIRE EXTINGUISHER
- FIRE SPRINKLERS
- FIRE ALARM DEVICE VISUAL SIGNAL
- FIRE ALARM DEVICE COMBINATION SIGNAL
- FIRE ALARM SPEAKER SIGNAL
- HEAT DETECTOR
- WALL MOUNTED SMOKE DETECTOR
- CEILING MOUNTED SMOKE DETECTOR
- FIRE ALARM DEVICE PULL STATION
- FLOW SWITCH
- TAMPER SWITCH
- VALVE BOX

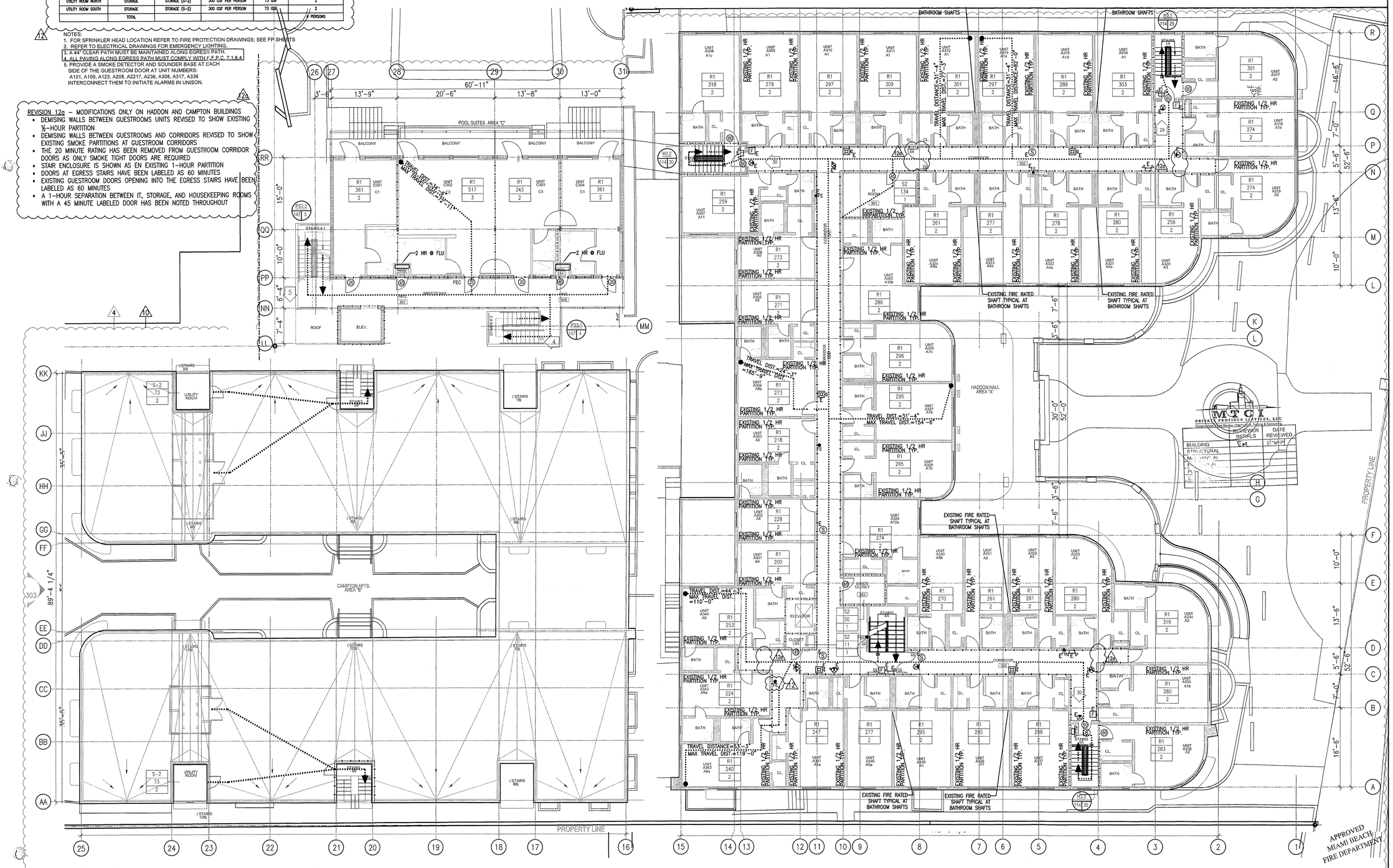

1 THIRD FLOOR – LIFE SAFETY PLAN
SCALE: 1/8" = 1'-0"

HADDON HALL
1500 COLLINS AVE
MIAMI BEACH, FL

KEYPLAN N.T.S.

REVISIONS

NO.	DESCRIPTION	ISSUE DATE
1	PROGRESS TO 100% CD	02-18-2014
4	FIRE REVIEW COMMENTS	04-01-2014
10	MASTER PERMIT COMMENTS	07-03-2014
12	FIRE & MTCI PERMIT COMMENTS	08-21-2014
12a	FIRE PERMIT COMMENTS	09-29-2014

100% CONSTRUCTION DOCUMENT SET

NORTH

SEAL

10.9.14
Jonathan Cardello
Lic. # AR93391

ADD Inc Architecture Interiors Planning

One Biscayne Tower
Suite 1670
Two South
Biscayne Boulevard
Miami, Fl 33131
T. 305.482.8700
F. 305.482.8770
www.addinc.com
Lic. # AA26001507

Boston Miami

JOB NUMBER:	13036.00
CHECKED BY:	
ISSUE DATE:	FEBRUARY 18, 2014
SCALE:	1/8" = 1'-0"

SHEET TITLE

LIFE SAFETY PLAN
THIRD FLOOR

SHEET NUMBER

LS-103

COPYRIGHT ADD INC 2011