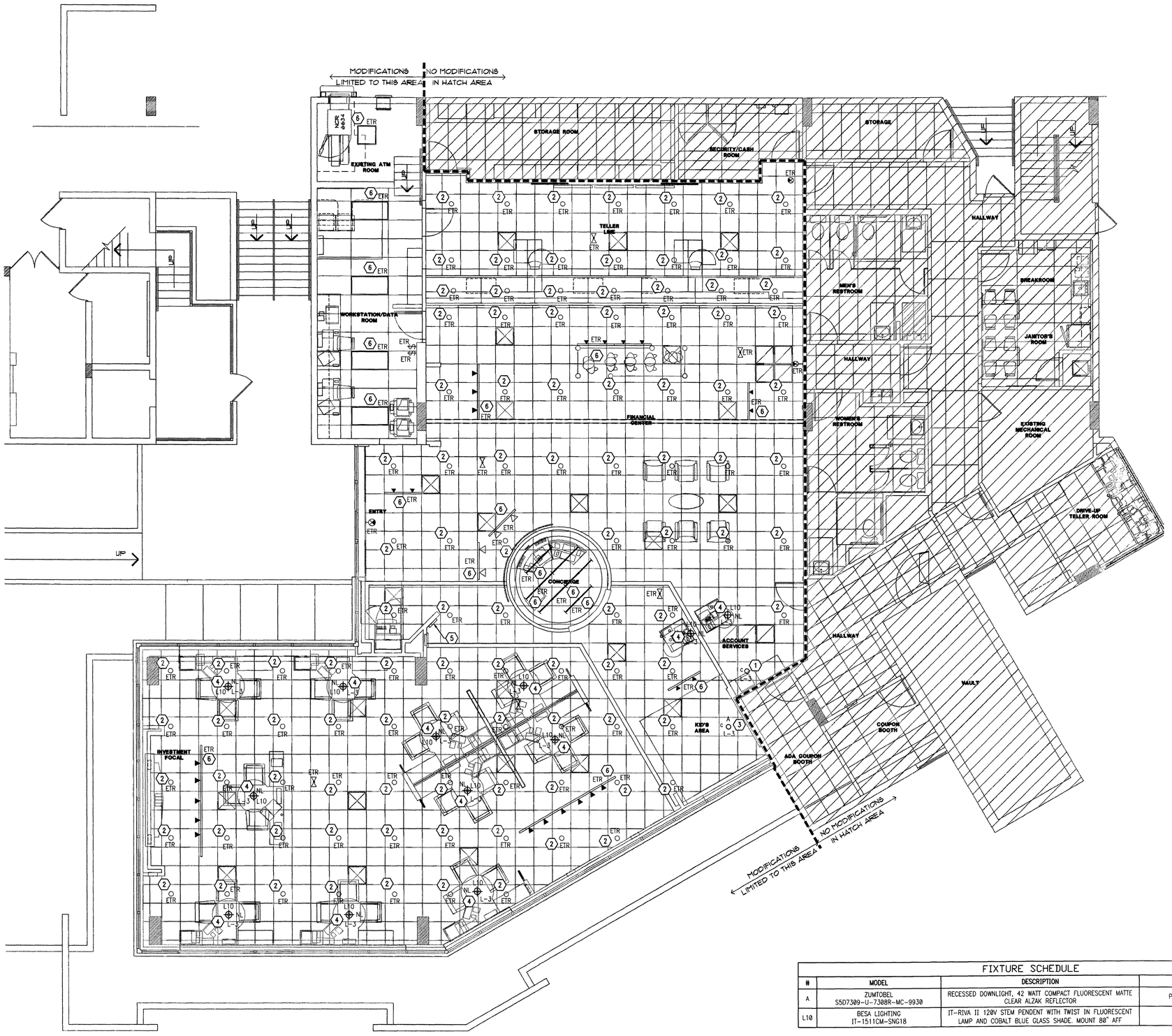

LIGHTING - DEMO GENERAL NOTES

1. REFER TO ARCHITECTURAL DEMOLITION PLANS FOR EXISTING LIGHTING TO BE REMOVED OR RELOCATED.
2. ALL DEVICES SHOWN ON PLAN ARE EXISTING UNLESS OTHERWISE NOTED. REFER TO SYMBOL LEGEND FOR DEVICE DESCRIPTION.
3. EXISTING CONDITIONS SHOWN ON THIS DRAWING ARE TAKEN FROM ORIGINAL DRAWINGS AND FIELD INVESTIGATION. ALL EXISTING CONDITIONS MUST BE VERIFIED PRIOR TO BID. FIELD CONDITIONS SHALL GOVERN.
4. THE DEMOLITION PLAN IS NOT INCLUSIVE OF ALL ELECTRICAL DEVICES WITHIN THE PROJECT AREA. IT IS INTENDED TO PROVIDE THE CONTRACTOR WITH A GENERAL KNOWLEDGE OF THE EXISTING CONDITIONS WITHIN THE PROJECT AREA. ANY DISCREPANCIES OR CONDITIONS NOT SHOWN ON THIS PLAN SHALL BE BROUGHT TO THE ATTENTION OF THE ENGINEER. THE CONTRACTOR IS RESPONSIBLE FOR ALL REQUIRED DEMOLITION WHETHER SHOWN ON THE PLANS OR NOT.
5. ALL CONDUITS SERVING OTHER SPACES THAT RUN THROUGH THE PROJECT AREA SHALL REMAIN ACTIVE DURING CONSTRUCTION, SO AS NOT TO CAUSE ANY DISRUPTION TO THESE OTHER SPACES. IT IS THE CONTRACTOR'S RESPONSIBILITY TO INSURE THAT ALL CONDUITS, NEW OR EXISTING, WITHIN THE PROJECT AREA ARE PROPERLY SUPPORTED AND PROVIDED W/ BONDING BUSHINGS IN ACCORDANCE WITH THE NATIONAL ELECTRIC CODE.
6. ALL ITEMS REMOVED UNDER THIS PROJECT SHALL BE DISPOSED OF OR TURNED OVER TO THE OWNER AT THE OWNER'S DISCRETION.
7. THIS CONTRACTOR SHALL PROVIDE ELECTRICAL FOR PHASING WORK AS REQUIRED OR DIRECTED BY THE ARCHITECT, REFER TO ARCHITECTURAL PHASING PLAN. TEMPORARY ELECTRICAL SERVICES (POWER, LIGHTING, FIRE ALARM, ETC.) SHALL BE PROVIDED WHEN NEW WORK AFFECTS SERVICES NEEDING TO REMAIN ACTIVE.
8. THE CONTRACTOR SHALL INVESTIGATE THE PROJECT AREA PRIOR TO BID TO DETERMINE ALL REQUIRED DEMOLITION.
9. NO WORK BEING DONE ON EXTERIOR BUILDING DEVICES.

LIGHTING - NEW GENERAL NOTES

1. ALL FIXTURES SHALL BE CIRCUITED TO EXISTING CIRCUITS UNLESS OTHERWISE NOTED. NUMBERS INDICATE CIRCUITING. CONTRACTOR SHALL VERIFY ACTUAL CIRCUITING IN THE FIELD.
2. ALL WIRING SHALL BE IN CONDUIT. CONDUIT SIZE IS 1/2" MINIMUM UNLESS OTHERWISE NOTED. MC CABLE (MIN. 3/8") IS ALLOWED, HOWEVER, ALL HOMERUNS SHALL BE IN CONDUIT. ENT IS NOT PERMITTED. PVC IS ACCEPTABLE WHERE ALLOWED BY CODE. CONTRACTOR MAY USE EMT OR GRS AS ALLOWED BY CODE.
3. WIRE SIZE SHALL BE MINIMUM #12 AWG, THWN SOLID COPPER UNLESS OTHERWISE NOTED. PROVIDE GROUND WIRE IN ALL RACEWAYS AND ANYWHERE REQUIRED BY CODE. INCREASE WIRE SIZE TO COMPENSATE FOR VOLTAGE DROP WHERE TOTAL LENGTH OF ANY BRANCH EXCEEDS 100 FEET.
4. WIRE SIZE SHALL NOT BE LESS THAN CORRESPONDING CIRCUIT BREAKER RATING AS REQUIRED BY CODE.
5. MAXIMUM NUMBER OF UNGROUNDED CONDUCTORS IN ANY CONDUIT SHALL BE THREE. ADDITIONAL WIRES ARE ACCEPTABLE IF WIRE SIZE IS INCREASED TO ALLOW FOR DERATING PER CODE. PROVIDE ADDITIONAL WIRES FOR SWITCHING AS REQUIRED.
6. CONDUIT SHALL BE SIZED IN ACCORDANCE WITH THE NATIONAL ELECTRIC CODE.
7. TWO OR THREE LIGHTING CIRCUITS MAY SHARE A COMMON NEUTRAL.
8. VERIFY MOUNTING AND LOCATION OF ALL FIXTURES WITH ARCHITECT PRIOR TO INSTALLATION. REFER TO ARCHITECTURAL DRAWING A2.0 FOR DIMENSIONED LOCATIONS OF PENDANT FIXTURES.
9. ALL EMERGENCY LIGHTS AND EXIT SIGN BATTERY UNITS SHALL BE PROVIDED WITH UNSWITCHED HOT AND CONNECTED TO LOCAL LIGHTING CIRCUIT. PROVIDE ALL NIGHT LIGHTS WITH AN UNSWITCHED HOT.
10. CONTRACTOR SHALL CLEAN AND RE-LAMP ALL FIXTURES THAT ARE EXISTING TO REMAIN.

LIGHTING - NEW PLAN NOTES

1. EXISTING FIXTURE BEING REUSED AND RELOCATED AS SHOWN. CONNECT TO CIRCUITING AND SWITCHING AS INDICATED. CONTRACTOR IS TO FIELD VERIFY EXISTING REFLECTOR IN FIXTURE. IF FOUND TO BE THE 45° CUTOFF REFLECTOR, CONTRACTOR IS TO REPLACE IT WITH THE STANDARD DOWNLIGHT REFLECTOR #7308R FROM ZUMTOBEL. CONTRACTOR IS TO INFORM PMC OF THIS CHANGE AND RECEIVE CONSENT PRIOR TO INSTALLATION. CLEAN AND RE-LAMP FIXTURE WITH TRIPLE TUBE 42W COMPACT FLUORESCENT LAMP.
2. EXISTING FIXTURE BEING REUSED. EXISTING CIRCUITING AND SWITCHING TO REMAIN. CONTRACTOR IS TO FIELD VERIFY EXISTING REFLECTOR IN FIXTURE. IF FOUND TO BE THE 45° CUTOFF REFLECTOR, CONTRACTOR IS TO REPLACE IT WITH THE STANDARD DOWNLIGHT REFLECTOR #7308R FROM ZUMTOBEL. CONTRACTOR IS TO INFORM PMC OF THIS CHANGE AND RECEIVE CONSENT PRIOR TO INSTALLATION. CLEAN AND RE-LAMP FIXTURE WITH TRIPLE TUBE 42W COMPACT FLUORESCENT LAMP.
3. PROVIDE NEW RECESSED DOWNLIGHT PER FIXTURE SCHEDULE. CONNECT TO CIRCUITING AND SWITCHING AS INDICATED.
4. PROVIDE NEW PENDANT FIXTURE AS SHOWN. REFER TO FIXTURE SCHEDULE FOR MOUNTING HEIGHT. COORDINATE WITH ARCHITECTURAL PLANS. CONNECT TO CIRCUITING AS INDICATED. PENDANTS SHALL OPERATE AS NIGHT LIGHTING.
5. EXISTING SWITCHBANK TO REMAIN.
6. EXISTING FIXTURE BEING RE-USED. EXISTING CIRCUITING AND SWITCHING TO REMAIN. CONTRACTOR IS TO CLEAN AND RE-LAMP ALL FIXTURES.

FIXTURE SCHEDULE

#	MODEL	DESCRIPTION	LAMP
A	ZUMTOBEL S5D7309-U-7308R-MC-9930	RECESSED DOWNLIGHT, 42 WATT COMPACT FLUORESCENT MATTE CLEAR ALZAK REFLECTOR	PL-T42W/30/4P/ALTO
L10	BESA LIGHTING IT-1511CM-SNG18	IT-RIVA II 120V STEM PENDENT WITH TWIST IN FLUORESCENT LAMP AND COBALT BLUE GLASS SHADE. MOUNT 80" AFF	18W LAMP

ELECTRICAL PLAN - LIGHTING
3/16" = 1'-0"

NORTH

INTERPLAN LLC
ARCHITECTURE
ENGINEERING
INTERIOR DESIGN
PROJECT MANAGEMENT

AA 003420
CA8660

933 LEE ROAD, FIRST FLOOR
ORLANDO, FLORIDA 32810
PH 407.645.5008
FX 407.629.9124

SEAL:

MALCOLM RUSSO
MAY 04 2009

CONSULTANT:

REVISIONS:

NO.	DATE	REMARKS

CHASE

INTERIOR REBRANDING CONVERSION
MIAMI BEACH - ALTON ROAD
WAMU BLDG ID# 1924 CHASE STORE ID# 1742
1801 ALTON ROAD
MIAMI, FL 33139

COPYRIGHT © 2009
INTERPLAN LLC RESERVES
COPYRIGHT & OTHER RIGHTS
RESTRICTING THESE DOCUMENTS
TO THE ORIGINAL SITE OR
PURPOSE FOR WHICH THEY WERE
PREPARED. REPRODUCTIONS,
CHANGES OR ASSIGNMENTS ARE
PROHIBITED.

PROJECT NO: 2009.0109

DATE: 04/30/2009

ELECTRICAL PLAN-
LIGHTING

E1.0

DRAWN BY: SN

CHECKED BY: MGR

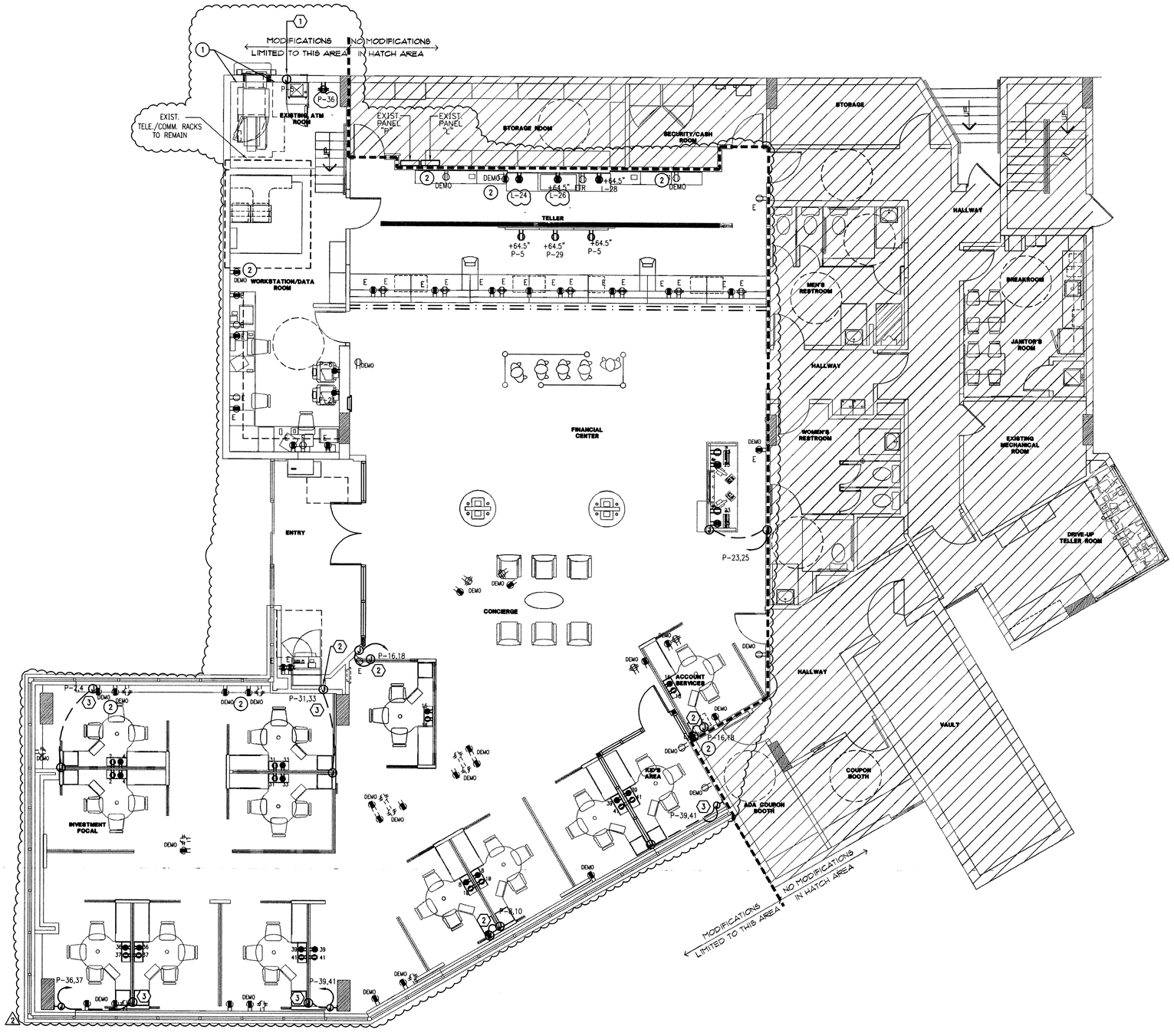

ELECTRICAL PLAN - POWER
3/16" = 1'-0"

NORTH

POWER - DEMO GENERAL NOTES

1. REFER TO ARCHITECTURAL DEMOLITION PLANS FOR EXISTING ITEMS TO BE REMOVED OR RELOCATED. REMOVE ASSOCIATED ELECTRICAL.
2. REMOVE ALL DEVICES, JUNCTION BOXES (IF POSSIBLE), CONDUIT (IF NECESSARY) AND WIRING BACK TO NEAREST JUNCTION BOX THAT IS TO REMAIN IN ALL AREAS BEING DEMOLISHED OR RENOVATED UNLESS OTHERWISE NOTED. FLOOR BOXES AND CONDUIT IN FLOOR SLAB WILL NOT BE REMOVED. TURN OVER ALL REMOVED MATERIALS TO OWNER AT OWNER'S DISCRETION.
3. ALL DEVICES SHOWN ON PLAN ARE EXISTING UNLESS OTHERWISE NOTED. REFER TO SYMBOL LEGEND FOR DEVICE DESCRIPTION.
4. EXISTING CONDITIONS SHOWN ON THIS DRAWING ARE TAKEN FROM ORIGINAL DRAWINGS AND FIELD INVESTIGATION. ALL EXISTING CONDITIONS MUST BE VERIFIED PRIOR TO BID. FIELD CONDITIONS SHALL GOVERN.
5. THE DEMOLITION PLAN IS NOT INCLUSIVE OF ALL ELECTRICAL DEVICES WITHIN THE PROJECT AREA. IT IS INTENDED TO PROVIDE THE CONTRACTOR WITH A GENERAL KNOWLEDGE OF THE EXISTING CONDITIONS WITHIN THE PROJECT AREA. ANY DISCREPANCIES OR CONDITIONS NOT SHOWN ON THIS PLAN SHALL BE BROUGHT TO THE ATTENTION OF THE PMC. THE CONTRACTOR IS RESPONSIBLE FOR ALL REQUIRED DEMOLITION WHETHER SHOWN ON THE PLANS OR NOT.
6. ALL CONDUITS SERVING OTHER SPACES, THAT RUN THROUGH THE PROJECT AREA SHALL REMAIN ACTIVE DURING CONSTRUCTION, SO AS NOT TO CAUSE ANY DISRUPTION TO THESE OTHER SPACES. IT IS THE CONTRACTOR'S RESPONSIBILITY TO INSURE THAT ALL CONDUITS, NEW OR EXISTING, WITHIN THE PROJECT AREA ARE PROPERLY SUPPORTED AND PROVIDED W/ BONDING BUSHINGS IN ACCORDANCE WITH THE NATIONAL ELECTRIC CODE.
7. ALL ITEMS REMOVED UNDER THIS PROJECT SHALL BE DISPOSED OF OR TURNED OVER TO THE OWNER AT THE OWNER'S DISCRETION.
8. THIS CONTRACTOR SHALL PROVIDE ELECTRICAL FOR PHASING WORK AS REQUIRED OR AS DIRECTED BY THE ARCHITECT. REFER TO ARCHITECTURAL PHASING PLAN. TEMPORARY ELECTRICAL SERVICES (POWER, LIGHTING, FIRE ALARM, ETC.) SHALL BE PROVIDED WHEN NEW WORK AFFECTS SERVICES NEEDING TO REMAIN ACTIVE.
9. THE CONTRACTOR SHALL INVESTIGATE THE PROJECT AREA PRIOR TO BID TO DETERMINE ALL REQUIRED DEMOLITION.
10. NO WORK BEING DONE ON EXTERIOR BUILDING DEVICES.

POWER - DEMO PLAN NOTES

1. RELOCATE POWER ON THIS WALL AS NECESSARY TO AVOID CONFLICTS DUE TO WALL RENOVATION. REUTILIZE EXISTING OUTLET AND CIRCUIT.
2. DEVICE TO BE REMOVED. REMOVE WIRING BACK TO NEAREST JUNCTION BOX THAT IS TO REMAIN. PROVIDE BLANK COVER AND PATCH TO MATCH SURROUNDING WALL. COORDINATE WITH ARCHITECTURAL.

POWER - NEW GENERAL NOTES

1. ALL OUTLETS AND EQUIPMENT SHALL BE CIRCUITED TO EXISTING CIRCUITS UNLESS OTHERWISE NOTED. NUMBERS INDICATE CIRCUITING. CONTRACTOR SHALL VERIFY ACTUAL CIRCUITS IN THE FIELD.
2. CONTRACTOR SHALL INTERCEPT AND EXTEND CONDUIT AND WIRING FOR ALL CIRCUITS BEING RE-USED TO NEW DEVICE LOCATIONS AS NECESSARY.
3. ALL WIRING SHALL BE IN CONDUIT. CONDUIT SIZE IS 1/2" MINIMUM UNLESS OTHERWISE NOTED. MC CABLE (MIN. 3/8") IS ALLOWED, HOWEVER, ALL HOMERUNS SHALL BE IN CONDUIT. ENT IS NOT PERMITTED. PVC IS ACCEPTABLE WHERE ALLOWED BY CODE. CONTRACTOR MAY USE EMT OR GRS AS ALLOWED BY CODE.
4. WIRE SIZE SHALL BE MINIMUM #12 AWG, THWN SOLID COPPER UNLESS OTHERWISE NOTED. PROVIDE GROUND WIRE IN ALL RACEWAYS AND ANYWHERE REQUIRED BY CODE. INCREASE WIRE SIZE TO COMPENSATE FOR VOLTAGE DROP WHERE TOTAL LENGTH OF ANY BRANCH EXCEEDS 100 FEET.
5. WIRE SIZE SHALL NOT BE LESS THAN CORRESPONDING CIRCUIT BREAKER RATING AS REQUIRED BY CODE.
6. MAXIMUM NUMBER OF UNGROUNDED CONDUCTORS IN ANY CONDUIT SHALL BE THREE. ADDITIONAL WIRES ARE ACCEPTABLE IF WIRE SIZE IS INCREASED TO ALLOW FOR DERATING PER CODE. PROVIDE ADDITIONAL WIRES FOR SWITCHING AS REQUIRED.
7. CONDUIT SHALL BE SIZED IN ACCORDANCE WITH THE NATIONAL ELECTRIC CODE.
8. EACH RECEPTACLE CIRCUIT DOES NOT REQUIRE A DEDICATED NEUTRAL. SHARED NEUTRALS ARE ALLOWED EXCEPT FOR ISOLATED GROUND CIRCUITS.
9. VERIFY MOUNTING AND LOCATION OF ALL OUTLETS WITH ARCHITECT PRIOR TO INSTALLATION.
10. REFER TO DETAIL 1 SHEET E0.0 FOR ISOLATED GROUND RECEPTACLE DETAILS.

POWER - NEW PLAN NOTES

1. JUNCTION BOX FOR BLUE GLOWING WALL SURROUNDING ATM. VERIFY EXACT ELECTRICAL REQUIREMENTS WITH EQUIPMENT VENDOR. COORDINATE WITH ARCHITECTURAL.
2. JUNCTION BOX FOR CONNECTION OF POWER TO PRE-WIRED WORKSTATION. COORDINATE ACTUAL ELECTRICAL CONNECTION WITH FURNITURE INSTALLATION REQUIREMENTS.
3. JUNCTION BOX FOR CONNECTION OF POWER TO PRE-WIRED WORKSTATION. COORDINATE ACTUAL ELECTRICAL CONNECTION WITH FURNITURE INSTALLATION REQUIREMENTS. SAW AND CUT AND PATCH AS NECESSARY.

Electrical Plans Examiner
Lic. # PX 2611

INTERPLAN LLC
ARCHITECTURE
ENGINEERING
INTERIOR DESIGN
PROJECT MANAGEMENT

AA 003420
CA8660

933 LEE ROAD, FIRST FLOOR
ORLANDO, FLORIDA 32810
PH 407.645.5008
FX 407.629.9124

SEAL:

MALCOLM RUBIO
AUG 17 2009

CONSULTANT:

REVISIONS:

NO.	DATE	REMARKS
1	6-10-09	PERMIT COMMENTS
2	6-10-09	OWNER REVISIONS

CHASE

INTERIOR REBRANDING CONVERSION
MIAMI BEACH - ALTON ROAD
WAMU BLDG ID# 1924 CHASE STORE ID# 1742
1801 ALTON ROAD
MIAMI, FL 33139

COPYRIGHT © 2009
INTERPLAN LLC RESERVES COPYRIGHT & OTHER RIGHTS RESTRICTING THESE DOCUMENTS TO THE ORIGINAL SITE OR PURPOSE FOR WHICH THEY WERE PREPARED. REPRODUCTIONS, CHANGES OR ASSIGNMENTS ARE PROHIBITED.

PROJECT NO: 2009.0109
DATE: 04/30/2009

ELECTRICAL PLAN-POWER

E2.0

DRAWN BY: SN
CHECKED BY: MGR

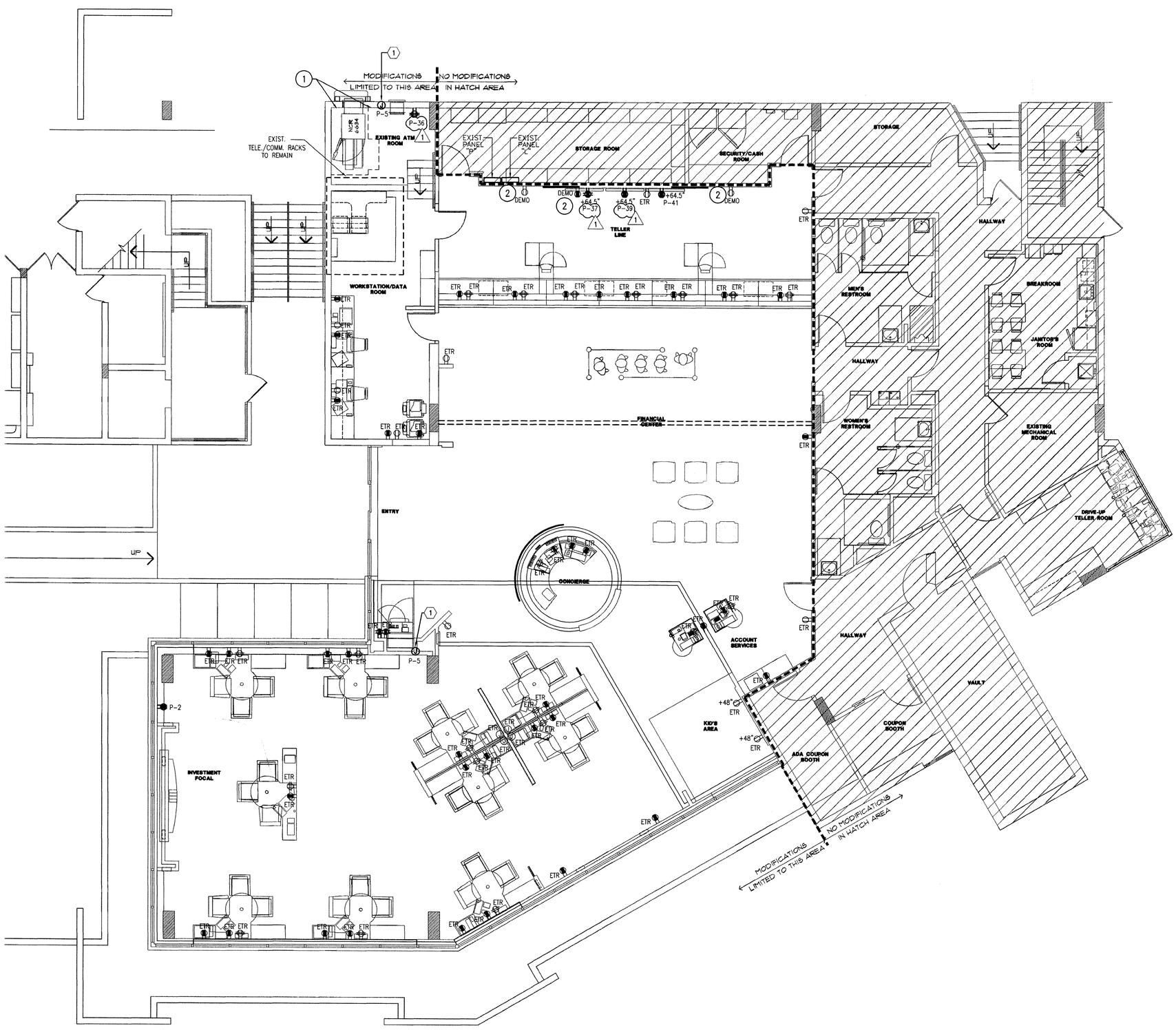

ELECTRICAL PLAN - POWER
3/16" = 1'-0"

NORTH

POWER - DEMO GENERAL NOTES

1. REFER TO ARCHITECTURAL DEMOLITION PLANS FOR EXISTING ITEMS TO BE REMOVED OR RELOCATED. REMOVE ASSOCIATED ELECTRICAL.
2. REMOVE ALL DEVICES, JUNCTION BOXES (IF POSSIBLE), CONDUIT (IF NECESSARY) AND WIRING BACK TO NEAREST JUNCTION BOX THAT IS TO REMAIN IN ALL AREAS BEING DEMOLISHED OR RENOVATED UNLESS OTHERWISE NOTED. FLOOR BOXES AND CONDUIT IN FLOOR SLAB WILL NOT BE REMOVED. TURN OVER ALL REMOVED MATERIALS TO OWNER AT OWNER'S DISCRETION.
3. ALL DEVICES SHOWN ON PLAN ARE EXISTING UNLESS OTHERWISE NOTED. REFER TO SYMBOL LEGEND FOR DEVICE DESCRIPTION.
4. EXISTING CONDITIONS SHOWN ON THIS DRAWING ARE TAKEN FROM ORIGINAL DRAWINGS AND FIELD INVESTIGATION. ALL EXISTING CONDITIONS MUST BE VERIFIED PRIOR TO BID. FIELD CONDITIONS SHALL GOVERN.
5. THE DEMOLITION PLAN IS NOT INCLUSIVE OF ALL ELECTRICAL DEVICES WITHIN THE PROJECT AREA. IT IS INTENDED TO PROVIDE THE CONTRACTOR WITH A GENERAL KNOWLEDGE OF THE EXISTING CONDITIONS WITHIN THE PROJECT AREA. ANY DISCREPANCIES OR CONDITIONS NOT SHOWN ON THIS PLAN SHALL BE BROUGHT TO THE ATTENTION OF THE PMC. THE CONTRACTOR IS RESPONSIBLE FOR ALL REQUIRED DEMOLITION WHETHER SHOWN ON THE PLANS OR NOT.
6. ALL CONDUITS SERVING OTHER SPACES, THAT RUN THROUGH THE PROJECT AREA SHALL REMAIN ACTIVE DURING CONSTRUCTION, SO AS NOT TO CAUSE ANY DISRUPTION TO THESE OTHER SPACES. IT IS THE CONTRACTOR'S RESPONSIBILITY TO INSURE THAT ALL CONDUITS, NEW OR EXISTING, WITHIN THE PROJECT AREA ARE PROPERLY SUPPORTED AND PROVIDED W/ BONDING BUSHINGS IN ACCORDANCE WITH THE NATIONAL ELECTRIC CODE.
7. ALL ITEMS REMOVED UNDER THIS PROJECT SHALL BE DISPOSED OF OR TURNED OVER TO THE OWNER AT THE OWNER'S DISCRETION.
8. THIS CONTRACTOR SHALL PROVIDE ELECTRICAL FOR PHASING WORK AS REQUIRED OR AS DIRECTED BY THE ARCHITECT. REFER TO ARCHITECTURAL PHASING PLAN. TEMPORARY ELECTRICAL SERVICES (POWER, LIGHTING, FIRE ALARM, ETC.) SHALL BE PROVIDED WHEN NEW WORK AFFECTS SERVICES NEEDING TO REMAIN ACTIVE.
9. THE CONTRACTOR SHALL INVESTIGATE THE PROJECT AREA PRIOR TO BID TO DETERMINE ALL REQUIRED DEMOLITION.
10. NO WORK BEING DONE ON EXTERIOR BUILDING DEVICES.

POWER - DEMO PLAN NOTES (–)

(1) RELOCATE POWER ON THIS WALL AS NECESSARY TO AVOID CONFLICTS DUE TO WALL RENOVATION. REUTILIZE EXISTING OUTLET AND CIRCUIT.

(2) DEVICE TO BE REMOVED. REMOVE WIRING BACK TO NEAREST JUNCTION BOX THAT IS TO REMAIN. PROVIDE BLANK COVER AND PATCH TO MATCH SURROUNDING WALL. COORDINATE WITH ARCHITECTURAL.

POWER - NEW GENERAL NOTES

1. ALL OUTLETS AND EQUIPMENT SHALL BE CIRCUITED TO EXISTING CIRCUITS UNLESS OTHERWISE NOTED. NUMBERS INDICATE CIRCUITING. CONTRACTOR SHALL VERIFY ACTUAL CIRCUITS IN THE FIELD.
2. CONTRACTOR SHALL INTERCEPT AND EXTEND CONDUIT AND WIRING FOR ALL CIRCUITS BEING RE-USED TO NEW DEVICE LOCATIONS AS NECESSARY.
3. ALL WIRING SHALL BE IN CONDUIT. CONDUIT SIZE IS 1/2" MINIMUM UNLESS OTHERWISE NOTED. MC CABLE (MIN. 3/8") IS ALLOWED, HOWEVER, ALL HOMERUNS SHALL BE IN CONDUIT. ENT IS NOT PERMITTED. PVC IS ACCEPTABLE WHERE ALLOWED BY CODE. CONTRACTOR MAY USE EMT OR GRS AS ALLOWED BY CODE.
4. WIRE SIZE SHALL BE MINIMUM #12 AWG, THWN SOLID COPPER UNLESS OTHERWISE NOTED. PROVIDE GROUND WIRE IN ALL RACEWAYS AND ANYWHERE REQUIRED BY CODE. INCREASE WIRE SIZE TO COMPENSATE FOR VOLTAGE DROP WHERE TOTAL LENGTH OF ANY BRANCH EXCEEDS 100 FEET.
5. WIRE SIZE SHALL NOT BE LESS THAN CORRESPONDING CIRCUIT BREAKER RATING AS REQUIRED BY CODE.
6. MAXIMUM NUMBER OF UNGROUNDED CONDUCTORS IN ANY CONDUIT SHALL BE THREE. ADDITIONAL WIRES ARE ACCEPTABLE IF WIRE SIZE IS INCREASED TO ALLOW FOR DERATING PER CODE. PROVIDE ADDITIONAL WIRES FOR SWITCHING AS REQUIRED.
7. CONDUIT SHALL BE SIZED IN ACCORDANCE WITH THE NATIONAL ELECTRIC CODE.
8. EACH RECEPTACLE CIRCUIT DOES NOT REQUIRE A DEDICATED NEUTRAL. SHARED NEUTRALS ARE ALLOWED EXCEPT FOR ISOLATED GROUND CIRCUITS.
9. VERIFY MOUNTING AND LOCATION OF ALL OUTLETS WITH ARCHITECT PRIOR TO INSTALLATION.
10. REFER TO DETAIL 1 SHEET E0.0 FOR ISOLATED GROUND RECEPTACLE DETAILS.

POWER - NEW PLAN NOTES (⬡)

(1) JUNCTION BOX FOR BLUE GLOWING WALL SURROUNDING ATM. VERIFY EXACT ELECTRICAL REQUIREMENTS WITH EQUIPMENT VENDOR. COORDINATE WITH ARCHITECTURAL.

Electrical Plans Examiner
Lic. # PX 2611

INTERPLAN LLC
ARCHITECTURE
ENGINEERING
INTERIOR DESIGN
PROJECT MANAGEMENT

AA 003420
CA8660

933 LEE ROAD, FIRST FLOOR
ORLANDO, FLORIDA 32810
PH 407.645.5008
FX 407.629.9124

SEAL:

MALCOLM RUSSO
JUN 1 2 2009

CONSULTANT:

REVISIONS:

NO.	DATE	REMARKS
1	06-10-09	PERMIT COMMENTS

CHASE

INTERIOR REBRANDING CONVERSION
MIAMI BEACH - ALTON ROAD
WAMU BLDG ID# 1924 CHASE STORE ID# 1742
1801 ALTON ROAD
MIAMI, FL 33139

COPYRIGHT © 2009
INTERPLAN LLC RESERVES COPYRIGHT & OTHER RIGHTS RESTRICTING THESE DOCUMENTS TO THE ORIGINAL SITE OR PURPOSE FOR WHICH THEY WERE PREPARED. REPRODUCTIONS, CHANGES OR ASSIGNMENTS ARE PROHIBITED.

PROJECT NO: 2009.0109
DATE: 03/11/09

ELECTRICAL PLAN-POWER

E2.0

DRAWN BY: SN
CHECKED BY: MGR

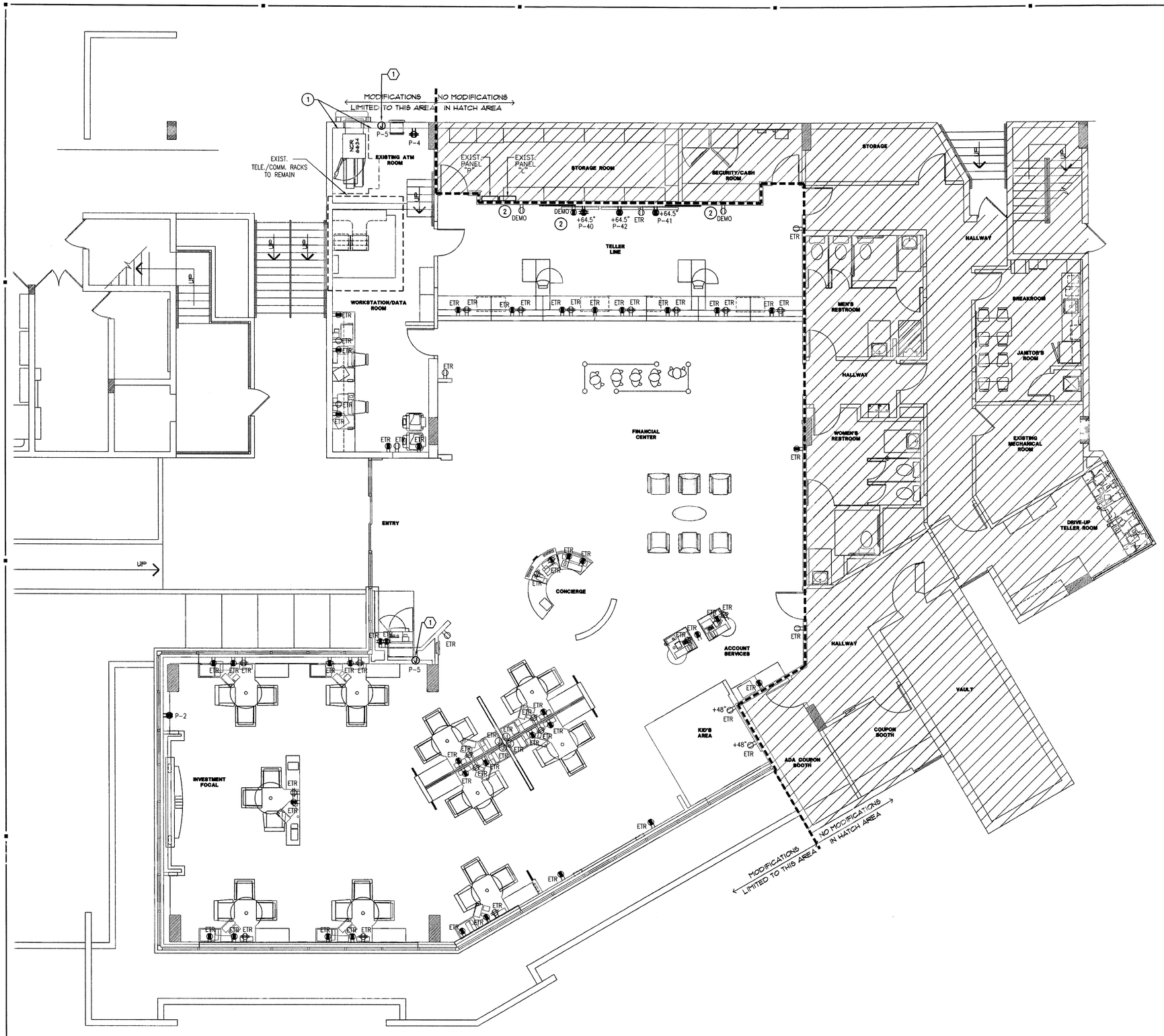

ELECTRICAL PLAN - POWER
3/16" = 1'-0"

NORTH

POWER - DEMO GENERAL NOTES

1. REFER TO ARCHITECTURAL DEMOLITION PLANS FOR EXISTING ITEMS TO BE REMOVED OR RELOCATED. REMOVE ASSOCIATED ELECTRICAL.
2. REMOVE ALL DEVICES, JUNCTION BOXES (IF POSSIBLE), CONDUIT (IF NECESSARY) AND WIRING BACK TO NEAREST JUNCTION BOX THAT IS TO REMAIN IN ALL AREAS BEING DEMOLISHED OR RENOVATED UNLESS OTHERWISE NOTED. FLOOR BOXES AND CONDUIT IN FLOOR SLAB WILL NOT BE REMOVED. TURN OVER ALL REMOVED MATERIALS TO OWNER AT OWNER'S DISCRETION.
3. ALL DEVICES SHOWN ON PLAN ARE EXISTING UNLESS OTHERWISE NOTED. REFER TO SYMBOL LEGEND FOR DEVICE DESCRIPTION.
4. EXISTING CONDITIONS SHOWN ON THIS DRAWING ARE TAKEN FROM ORIGINAL DRAWINGS AND FIELD INVESTIGATION. ALL EXISTING CONDITIONS MUST BE VERIFIED PRIOR TO BID. FIELD CONDITIONS SHALL GOVERN.
5. THE DEMOLITION PLAN IS NOT INCLUSIVE OF ALL ELECTRICAL DEVICES WITHIN THE PROJECT AREA. IT IS INTENDED TO PROVIDE THE CONTRACTOR WITH A GENERAL KNOWLEDGE OF THE EXISTING CONDITIONS WITHIN THE PROJECT AREA. ANY DISCREPANCIES OR CONDITIONS NOT SHOWN ON THIS PLAN SHALL BE BROUGHT TO THE ATTENTION OF THE PMC. THE CONTRACTOR IS RESPONSIBLE FOR ALL REQUIRED DEMOLITION WHETHER SHOWN ON THE PLANS OR NOT.
6. ALL CONDUITS SERVING OTHER SPACES, THAT RUN THROUGH THE PROJECT AREA SHALL REMAIN ACTIVE DURING CONSTRUCTION, SO AS NOT TO CAUSE ANY DISRUPTION TO THESE OTHER SPACES. IT IS THE CONTRACTOR'S RESPONSIBILITY TO INSURE THAT ALL CONDUITS, NEW OR EXISTING, WITHIN THE PROJECT AREA ARE PROPERLY SUPPORTED AND PROVIDED W/ BONDING BUSHINGS IN ACCORDANCE WITH THE NATIONAL ELECTRIC CODE.
7. ALL ITEMS REMOVED UNDER THIS PROJECT SHALL BE DISPOSED OF OR TURNED OVER TO THE OWNER AT THE OWNER'S DISCRETION.
8. THIS CONTRACTOR SHALL PROVIDE ELECTRICAL FOR PHASING WORK AS REQUIRED OR AS DIRECTED BY THE ARCHITECT. REFER TO ARCHITECTURAL PHASING PLAN. TEMPORARY ELECTRICAL SERVICES (POWER, LIGHTING, FIRE ALARM, ETC.) SHALL BE PROVIDED WHEN NEW WORK AFFECTS SERVICES NEEDING TO REMAIN ACTIVE.
9. THE CONTRACTOR SHALL INVESTIGATE THE PROJECT AREA PRIOR TO BID TO DETERMINE ALL REQUIRED DEMOLITION.
10. NO WORK BEING DONE ON EXTERIOR BUILDING DEVICES.

POWER - DEMO PLAN NOTES

1. RELOCATE POWER ON THIS WALL AS NECESSARY TO AVOID CONFLICTS DUE TO WALL RENOVATION. REUTILIZE EXISTING OUTLET AND CIRCUIT.
2. DEVICE TO BE REMOVED. REMOVE WIRING BACK TO NEAREST JUNCTION BOX THAT IS TO REMAIN. PROVIDE BLANK COVER AND PATCH TO MATCH SURROUNDING WALL. COORDINATE WITH ARCHITECTURAL.

POWER - NEW GENERAL NOTES

1. ALL OUTLETS AND EQUIPMENT SHALL BE CIRCUITED TO EXISTING CIRCUITS UNLESS OTHERWISE NOTED. NUMBERS INDICATE CIRCUITING. CONTRACTOR SHALL VERIFY ACTUAL CIRCUITS IN THE FIELD.
2. CONTRACTOR SHALL INTERCEPT AND EXTEND CONDUIT AND WIRING FOR ALL CIRCUITS BEING RE-USED TO NEW DEVICE LOCATIONS AS NECESSARY.
3. ALL WIRING SHALL BE IN CONDUIT. CONDUIT SIZE IS 1/2" MINIMUM UNLESS OTHERWISE NOTED. MC CABLE (MIN. 3/8") IS ALLOWED, HOWEVER, ALL HOMERUNS SHALL BE IN CONDUIT. ENT IS NOT PERMITTED. PVC IS ACCEPTABLE WHERE ALLOWED BY CODE. CONTRACTOR MAY USE EMT OR GRS AS ALLOWED BY CODE.
4. WIRE SIZE SHALL BE MINIMUM #12 AWG, THWN SOLID COPPER UNLESS OTHERWISE NOTED. PROVIDE GROUND WIRE IN ALL RACEWAYS AND ANYWHERE REQUIRED BY CODE. INCREASE WIRE SIZE TO COMPENSATE FOR VOLTAGE DROP WHERE TOTAL LENGTH OF ANY BRANCH EXCEEDS 100 FEET.
5. WIRE SIZE SHALL NOT BE LESS THAN CORRESPONDING CIRCUIT BREAKER RATING AS REQUIRED BY CODE.
6. MAXIMUM NUMBER OF UNGROUNDED CONDUCTORS IN ANY CONDUIT SHALL BE THREE. ADDITIONAL WIRES ARE ACCEPTABLE IF WIRE SIZE IS INCREASED TO ALLOW FOR DERATING PER CODE. PROVIDE ADDITIONAL WIRES FOR SWITCHING AS REQUIRED.
7. CONDUIT SHALL BE SIZED IN ACCORDANCE WITH THE NATIONAL ELECTRIC CODE.
8. EACH RECEPTACLE CIRCUIT DOES NOT REQUIRE A DEDICATED NEUTRAL. SHARED NEUTRALS ARE ALLOWED EXCEPT FOR ISOLATED GROUND CIRCUITS.
9. VERIFY MOUNTING AND LOCATION OF ALL OUTLETS WITH ARCHITECT PRIOR TO INSTALLATION.
10. REFER TO DETAIL 1 SHEET E0.0 FOR ISOLATED GROUND RECEPTACLE DETAILS.

POWER - NEW PLAN NOTES

1. JUNCTION BOX FOR BLUE GLOWING WALL SURROUNDING ATM. VERIFY EXACT ELECTRICAL REQUIREMENTS WITH EQUIPMENT VENDOR. COORDINATE WITH ARCHITECTURAL.

INTERPLAN LLC
ARCHITECTURE
ENGINEERING
INTERIOR DESIGN
PROJECT MANAGEMENT

AA 003420
CA8660

933 LEE ROAD, FIRST FLOOR
ORLANDO, FLORIDA 32810
PH 407.645.5008
FX 407.629.9124

SEAL:

MAY 04 2009

CONSULTANT:

REVISIONS:

NO.	DATE	REMARKS

CHASE

INTERIOR REBRANDING CONVERSION
MIAMI BEACH - ALTON ROAD
WAMU BLDG ID# 1924 CHASE STORE ID# 1742
1801 ALTON ROAD
MIAMI, FL 33139

COPYRIGHT © 2009
INTERPLAN LLC RESERVES COPYRIGHT & OTHER RIGHTS RESTRICTING THESE DOCUMENTS TO THE ORIGINAL SITE OR PURPOSE FOR WHICH THEY WERE PREPARED. REPRODUCTIONS, CHANGES OR ASSIGNMENTS ARE PROHIBITED.

PROJECT NO: 2009.0109

DATE: 04/30/2009

ELECTRICAL PLAN-POWER

E2.0

DRAWN BY: SN

CHECKED BY: MGR

PANEL: P (EXISTING)

BUS AMPS: 225A
MAIN SIZE/TYPE: MLO
VOLTS/PHASE: 208Y/120V, 3PH, 4W
SECTION(S): 1

SERVES: BANK
MOUNTING: SURFACE
LOCATION: STORAGE

EQUIPMENT GROUND BUS
ISOLATED GROUND BUS

	CKT NO.	DESCRIPTION	VOLTAMPS/PHASE A	B	C	WIRE NO.	BKR AMP	P	P	BKR AMP	WIRE NO.	VOLTAMPS/PHASE A	B	C	DESCRIPTION	CKT NO.	
IG	1	TELLER LINE	1,000			12	20	1	1	20	12	400			SYSTEM FURNITURE-INV FOCAL	2	IG
IG	3	TELLER LINE		1,000		12	20	1	1	20	12		400		SYSTEM FURNITURE-INV FOCAL	4	IG
IG	5	ATM - BLUE GLOWING WALL			1,000	12	20	1	1	20	12			1,500	COPIER	6	IG
IG	7	ATM	1,000			12	20	1	1	20	12	400			SYSTEM FURNITURE-INV FOCAL	8	IG
IG	9	DATA RACK		1,000		12	20	1	1	20	12		400		SYSTEM FURNITURE-INV FOCAL	10	IG
IG	11	DATA RACK			1,000	12	20	1	1	20	12			1,000	TELLER PLATFORMS-PRINTER	12	IG
IG	13	PHONE SYSTEM	500			12	20	1	1	20	12	1,000			TELLER PLATFORMS-PRINTER	14	IG
IG	15	WORKSTATION		750		12	20	1	1	20	12		400		SYSTEM FURNITURE	16	IG
IG	17	WORKSTATION-PRINTER			1,000	12	20	1	1	20	12			400	SYSTEM FURNITURE	18	IG
IG	19	WORKSTATION-PRINTER	1,000			12	20	1	1	20	12	750			DRIVE UP TELLER	20	IG
IG	21	COPIER		1,500		12	20	1	1	20	12		1,000		SECURITY EQUIPMENT	22	IG
IG	23	WORKSTATION-LOBBY			400	12	20	1	1	20	12			1,000	SECURITY EQUIPMENT	24	IG
IG	25	WORKSTATION-LOBBY	400			12	20	1	1	20	12	540			WORKSTATION	26	
IG	27	ATM		1,000		12	20	1	1	20	12		720		TELLER LINE	28	
IG	29	SPARE			0	12	20	1	1	20	12			540	CONV. RECEPTACLE	30	
IG	31	SYSTEM FURNITURE	400			12	20	1	1	20	12	1,800			UPS	32	
IG	33	SYSTEM FURNITURE		400		12	20	1	1	20	12		1,800		UPS	34	
	35	ATM			500	12	20	1	1	20				400	SYSTEM FURNITURE-INV FOCAL	36	
	37	SYSTEM FURNITURE-INV FOCAL	400			12	20	1				7,720			RELOCATED	38	
	39	SYSTEM FURNITURE-INV FOCAL		800		12	20	1	3	100	1		11,055		EXISTING PANEL "L"	40	
	41	SYSTEM FURNITURE-INV FOCAL			800	12	20	1						9,563		42	
		SUBTOTAL	4,700	6,450	4,700							12,610	15,775	14,503	SUBTOTAL		

TOTAL PHASE A	VA	17,310
	AMPS	183
TOTAL PHASE B	VA	22,225
	AMPS	238
TOTAL PHASE C	VA	19,203
	AMPS	200
TOTAL PANEL	VA	57,338
	AMPS	160
TOTAL DEMAND	VA	37,800
	AMPS	105

IG - ISOLATED GROUND CIRCUIT

PANEL: L (EXISTING)

BUS AMPS: 100A
MAIN SIZE/TYPE: MLO
VOLTS/PHASE: 208Y/120V, 3PH, 4W
SECTION(S): 1

SERVES: BANK LIGHTING
MOUNTING: SURFACE
LOCATION: STORAGE

PROVIDE EQUIPMENT GROUND BUS IF NOT EXISTING

	CKT NO.	DESCRIPTION	VOLTAMPS / PHASE A	B	C	WIRE SZ	BKR AMP	P	P	BKR AMP	WIRE SZ	VOLTAMPS / PHASE A	B	C	DESCRIPTION	CKT NO.
	1	FINANCIAL CENTER	1,058			12	20	1	1	20	12	500			COFFEE/WATER	2
	3	FINANCIAL CENTER		1,477		12	20	1	1	20	12		1,250		MICROWAVE	4
	5	FINANCIAL CENTER			1,104	12	20	1	1	20	12			1,000	REFRIGERATOR	6
	7	FINANCIAL CENTER	1,058			12	20	1	1	20	12	1,080			DRIVE-UP/CONV. RECEPT	8
LCK	9	NIGHT LIGHT		738		12	20	1	1	20	12		1,080		KID'S AREA/CONV. RECEPT.	10
	11	TRACK INVESTMENT FOCAL			1,500	12	20	1	1	20	12			900	TLTS/WATER FOUNTAIN	12
	13	TRACK FOCAL	1,200			12	20	1	1	20	12	500			TELLER LINE FLAT SCREEN MONITORS	14
	15	TRACK FOCAL		1,200		12	20	1	1	20	12		500		TELLER LINE FLAT SCREEN MONITORS	16
LCK	17	NIGHT LIGHT			922	12	20	1	1	20	12			500	TELLER LINE FLAT SCREEN MONITORS	18
	19	COVE LIGHTING	372			12	20	1	1	20	12	720			TELLER LINE	20
	21	LTG-SOUTH WORK AREA		1,165		12	20	1	1	20	12		1,080		CONV. RECEPTACLE	22
	23	LTG-NORTH WORK AREA			1,352	12	20	1	1	20	12			0	SPARE	24
	25	EF-3/FC-1	292			12	20	1	1	20	12	0			SPARE	26
	27	CU-1		905		10	30	2	1	20	12		0		SPARE	28
	29				905				1	20	12			540	WORKSTATION	30
		SUBTOTAL	3,980	5,495	5,783							2,800	3,910	2,940	SUBTOTAL	

TOTAL PHASE A	VA	6,780
	AMPS	57
TOTAL PHASE B	VA	9,405
	AMPS	79
TOTAL PHASE C	VA	8,723
	AMPS	73
TOTAL PANEL	VA	24,908
	AMPS	70
TOTAL DEMAND	VA	17454
	AMPS	49

ALL CIRCUIT BREAKERS ARE EXISTING TO REMAIN UNLESS NOTED OTHERWISE. NEW BREAKER SHALL MATCH MANUFACTURER AND AIC RATING OF EXISTING CIRCUIT BREAKER.

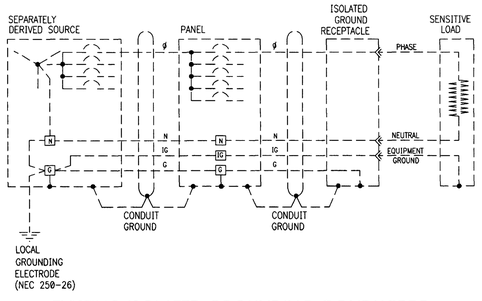

2 EXISTING ISOLATED GROUNDING CONDUCTOR PASS-THROUGH DISTRIBUTION PANEL DETAIL
NTS

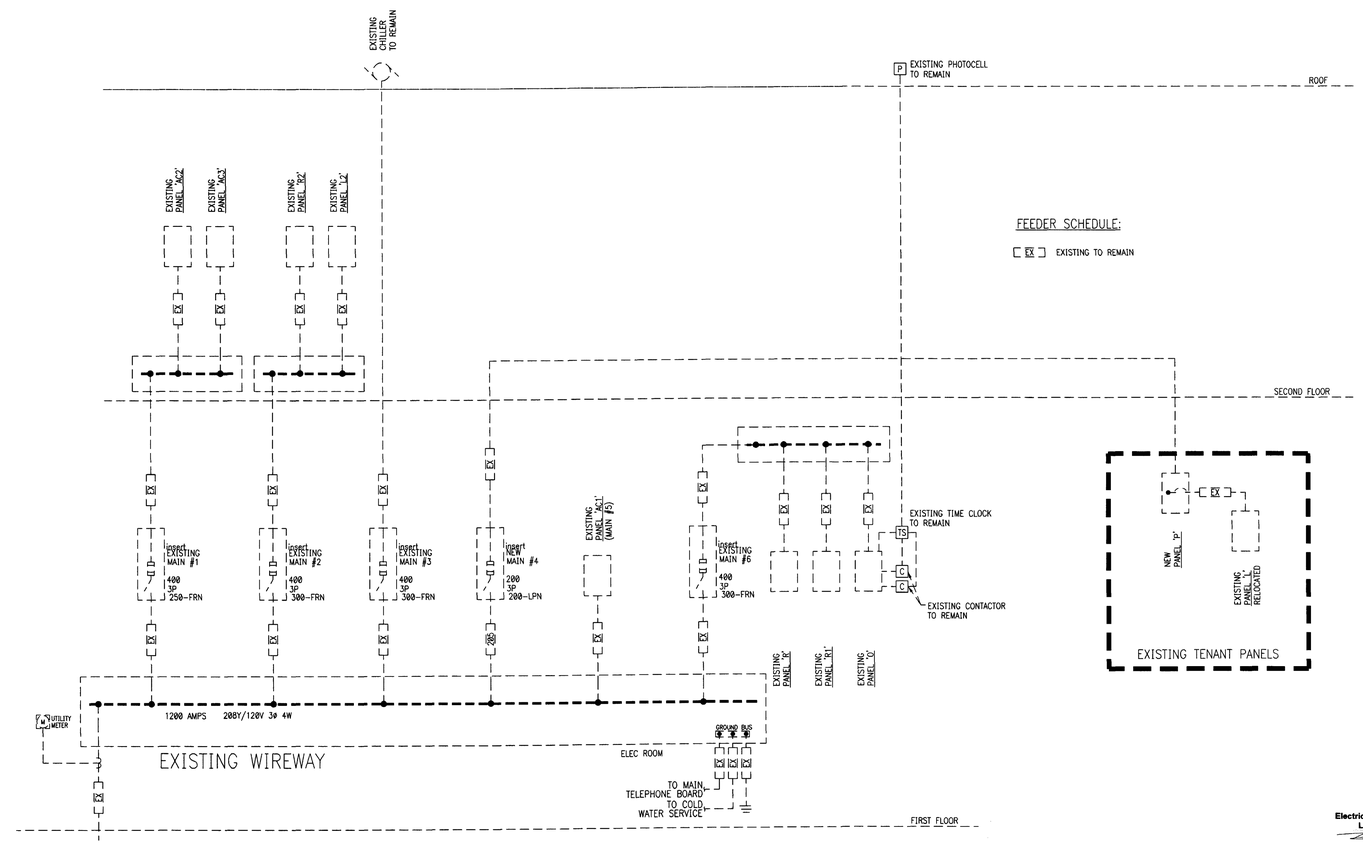

1 EXISTING ELECTRICAL ONE-LINE RISER DIAGRAM
NTS

Electrical Plans Examiner
Lic. # PX 2611

1 ADDED NEW SHEET.

INTERPLAN LLC
ARCHITECTURE
ENGINEERING
INTERIOR DESIGN
PROJECT MANAGEMENT

AA 003420
CA8660

933 LEE ROAD, FIRST FLOOR
ORLANDO, FLORIDA 32810
PH 407.645.5008
FX 407.629.9124

SEAL:

MALCOLM HUBBS
AUG 17 2009

CONSULTANT:

REVISIONS:

NO.	DATE	REMARKS
1	6-10-09	PERMIT COMMENTS
2	6-10-09	OWNER REVISIONS

CHASE

INTERIOR REBRANDING CONVERSION
MIAMI BEACH - ALTON ROAD
WAMU BLDG ID# 1924 CHASE STORE ID# 1742
1801 ALTON ROAD
MIAMI, FL 33139

COPYRIGHT © 2009
INTERPLAN LLC RESERVES COPYRIGHT & OTHER RIGHTS RESTRICTING THESE DOCUMENTS TO THE ORIGINAL SITE OR PURPOSE FOR WHICH THEY WERE PREPARED. REPRODUCTIONS, CHANGES OR ASSIGNMENTS ARE PROHIBITED.

PROJECT NO: 2009.0109

DATE: 06/03/09

ELECTRICAL RISER DIAGRAM AND PANEL SCHEDULES

1 E4.0

DRAWN BY: SN

CHECKED BY: MGR

PANEL: P (EXISTING)

BUS AMPS: 225A
MAIN SIZE/TYPE: MLO
VOLTS/PHASE: 208Y/120V, 3PH, 4W
SECTION(S): 1

SERVES: BANK
MOUNTING: SURFACE
LOCATION: STORAGE

EQUIPMENT GROUND BUS
ISOLATED GROUND BUS

	CKT NO.	DESCRIPTION	VOLTAMPS/PHASE A	B	C	WIRE NO.	BKR AMP	P	P	BKR AMP	WIRE NO.	VOLTAMPS/PHASE A	B	C	DESCRIPTION	CKT NO.	
IG	1	TELLER LINE	1,000			12	20	1	1	20	12	1,200			TELLER PLATFORMS	2	IG
IG	3	TELLER LINE		1,000		12	20	1	1	20	12		1,000		TELLER PLATFORMS-PRINTER	4	IG
IG	5	ATM - BLUE GLOWING WALL			1,000	12	20	1	1	20	12			1,000	TELLER PLATFORMS-PRINTER	6	IG
IG	7	ATM	1,000			12	20	1	1	20	12	1,000			TELLER PLATFORMS	8	IG
IG	9	DATA RACK		1,000		12	20	1	1	20	12		1,000		TELLER PLATFORMS-PRINTER	10	IG
IG	11	DATA RACK			1,000	12	20	1	1	20	12			1,000	TELLER PLATFORMS-PRINTER	12	IG
IG	13	PHONE SYSTEM	500			12	20	1	1	20	12	1,000			TELLER PLATFORMS-PRINTER	14	IG
IG	15	WORKSTATION		750		12	20	1	1	20	12		1,000		ACCOUNT SERVICE	16	IG
IG	17	WORKSTATION-PRINTER			1,000	12	20	1	1	20	12			1,000	ACCOUNT SERVICE-PRINTER	18	IG
IG	19	WORKSTATION-PRINTER	1,000			12	20	1	1	20	12	750			DRIVE UP TELLER	20	IG
IG	21	WORKSTATION-COPIER		1,000		12	20	1	1	20	12		1,000		SECURITY EQUIPMENT	22	IG
IG	23	CONCIERGE/FOCAL			1,000	12	20	1	1	20	12			1,000	SECURITY EQUIPMENT	24	IG
IG	25	CONCIERGE-PRINTER	1,000			12	20	1	1	20	12	720			WORKSTATION	26	
IG	27	ATM		1,000		12	20	1	1	20	12		720		TELLER LINE	28	
IG	29	CONSULTATION PLATFORMS			1,000	12	20	1	1	20	12			900	CONV. RECEPTACLE	30	
IG	31	CONSULTATION PLATFORMS	1,000			12	20	1	1	20	12	1,800			UPS	32	
IG	33	CONSULTATION PLATFORMS		1,000		12	20	1	1	20	12		1,800		UPS	34	
	35	ATM			500	12	20	1	1	20				1000	NIGHT DEPOSITORY	36	
	37	TELLER LINE FLAT SCREEN MONITORS	500			12	20	1				7,720			RELOCATED	38	
	39	TELLER LINE FLAT SCREEN MONITORS		500		12	20	1	3	100	1		11,055		EXISTING PANEL "L"	40	
	41	TELLER LINE FLAT SCREEN MONITORS			500	12	20	1						9,663		42	
		SUBTOTAL	6,000	6,250	6,000							14,190	17,575	15,563	SUBTOTAL		

TOTAL PHASE A	VA	20,190
	AMPS	169
TOTAL PHASE B	VA	23,825
	AMPS	199
TOTAL PHASE C	VA	21,563
	AMPS	180
TOTAL PANEL	VA	65,578
	AMPS	183
TOTAL DEMAND	VA	48,927
	AMPS	136

IG - ISOLATED GROUND CIRCUIT

PANEL: L (EXISTING)

BUS AMPS: 100A
MAIN SIZE/TYPE: MLO
VOLTS/PHASE: 208Y/120V, 3PH, 4W
SECTION(S): 1

SERVES: BANK LIGHTING
MOUNTING: SURFACE
LOCATION: STORAGE

PROVIDE EQUIPMENT GROUND BUS IF NOT EXISTING

	CKT NO.	DESCRIPTION	VOLTAMPS / PHASE A	B	C	WIRE SZ	BKR AMP	P	P	BKR AMP	WIRE SZ	VOLTAMPS / PHASE A	B	C	DESCRIPTION	CKT NO.
	1	FINANCIAL CENTER	1,058			12	20	1	1	20	12	500			COFFEE/WATER	2
	3	FINANCIAL CENTER		1,477		12	20	1	1	20	12		1,250		MICROWAVE	4
	5	FINANCIAL CENTER			1,184	12	20	1	1	20	12			1,000	REFRIGERATOR	6
	7	FINANCIAL CENTER	1,058			12	20	1	1	20	12	1,080			DRIVE-UP/CONV. RECEPT	8
LCK	9	NIGHT LIGHT		738		12	20	1	1	20	12		1,080		KID'S AREA/CONV. RECEPT.	10
	11	TRACK INVESTMENT FOCAL			1,500	12	20	1	1	20	12			900	TLTS/WATER FOUNTAIN	12
	13	TRACK FOCAL	1,200			12	20	1	1	20	12	720			ACCOUNT SERVICE	14
	15	TRACK FOCAL		1,200		12	20	1	1	20	12		1,080		TELLER PLATFORMS	16
LCK	17	NIGHT LIGHT			922	12	20	1	1	20	12			720	TELLER LINE	18
	19	COVE LIGHTING	372			12	20	1	1	20	12	720			TELLER LINE	20
	21	LTG-SOUTH WORK AREA		1,165		12	20	1	1	20	12		1,080		CONV. RECEPTACLE	22
	23	LTG-NORTH WORK AREA			1,352	12	20	1	1	20	12			720	CONSULATATION PLATFORMS	24
	25	EF-3/FC-1	292			12	20	1	1	20	12	720			CONSULATATION PLATFORMS	26
	27	CU-1		905		10	30	2	1	20	12		1,080		TELLER PLATFORMS	28
	29				905				1	20	12			540	WORKSTATION	30
		SUBTOTAL	3,980	5,495	5,783							3,720	[illegible]	3,960	SUBTOTAL	

TOTAL PHASE A	VA	7,720
	AMPS	64
TOTAL PHASE B	VA	11,055
	AMPS	93
TOTAL PHASE C	VA	9,663
	AMPS	81
TOTAL PANEL	VA	28,438
	AMPS	80
TOTAL DEMAND	VA	29,710
	AMPS	83

ALL CIRCUIT BREAKERS ARE EXISTING TO REMAIN UNLESS NOTED OTHERWISE. NEW BREAKER SHALL MATCH MANUFACTURER AND AIC RATING OF EXISTING CIRCUIT BREAKER.

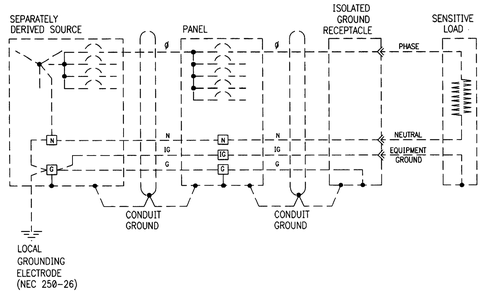

2 EXISTING ISOLATED GROUNDING CONDUCTOR PASS-THROUGH DISTRIBUTION PANEL DETAIL
NTS

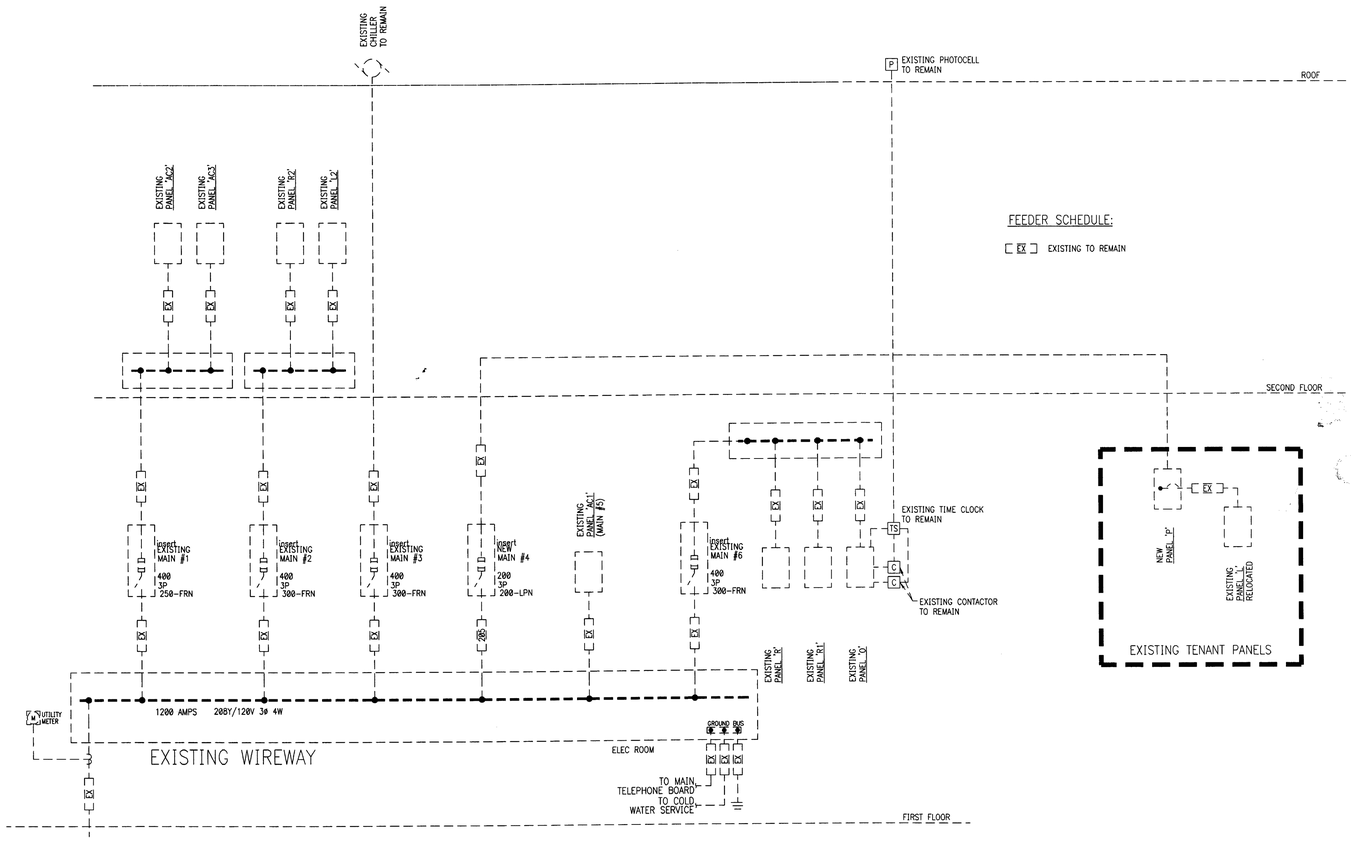

1 EXISTING ELECTRICAL ONE-LINE RISER DIAGRAM
NTS

Electrical Plans Examiner
Lic. # PX 2611

1 ADDED NEW SHEET.

INTERPLAN LLC
ARCHITECTURE
ENGINEERING
INTERIOR DESIGN
PROJECT MANAGEMENT

AA 003420
CA8660

933 LEE ROAD, FIRST FLOOR
ORLANDO, FLORIDA 32810
PH 407.645.5008
FX 407.629.9124

SEAL:

MALCOLM RUSSO
JUN 12 2009

CONSULTANT:

REVISIONS:

NO.	DATE	REMARKS
1	06-10-09	PERMIT COMMENTS

CHASE

INTERIOR REBRANDING CONVERSION
MIAMI BEACH - ALTON ROAD
WAMU BLDG ID# 1924 CHASE STORE ID# 1742
1801 ALTON ROAD
MIAMI, FL 33139

COPYRIGHT © 2009
INTERPLAN LLC RESERVES COPYRIGHT & OTHER RIGHTS RESTRICTING THESE DOCUMENTS TO THE ORIGINAL SITE OR PURPOSE FOR WHICH THEY WERE PREPARED. REPRODUCTIONS, CHANGES OR ASSIGNMENTS ARE PROHIBITED.

PROJECT NO: 2009.0109

DATE: 06/03/09

ELECTRICAL RISER DIAGRAM AND PANEL SCHEDULES

1 E4.0

DRAWN BY: SN
CHECKED BY: MGR

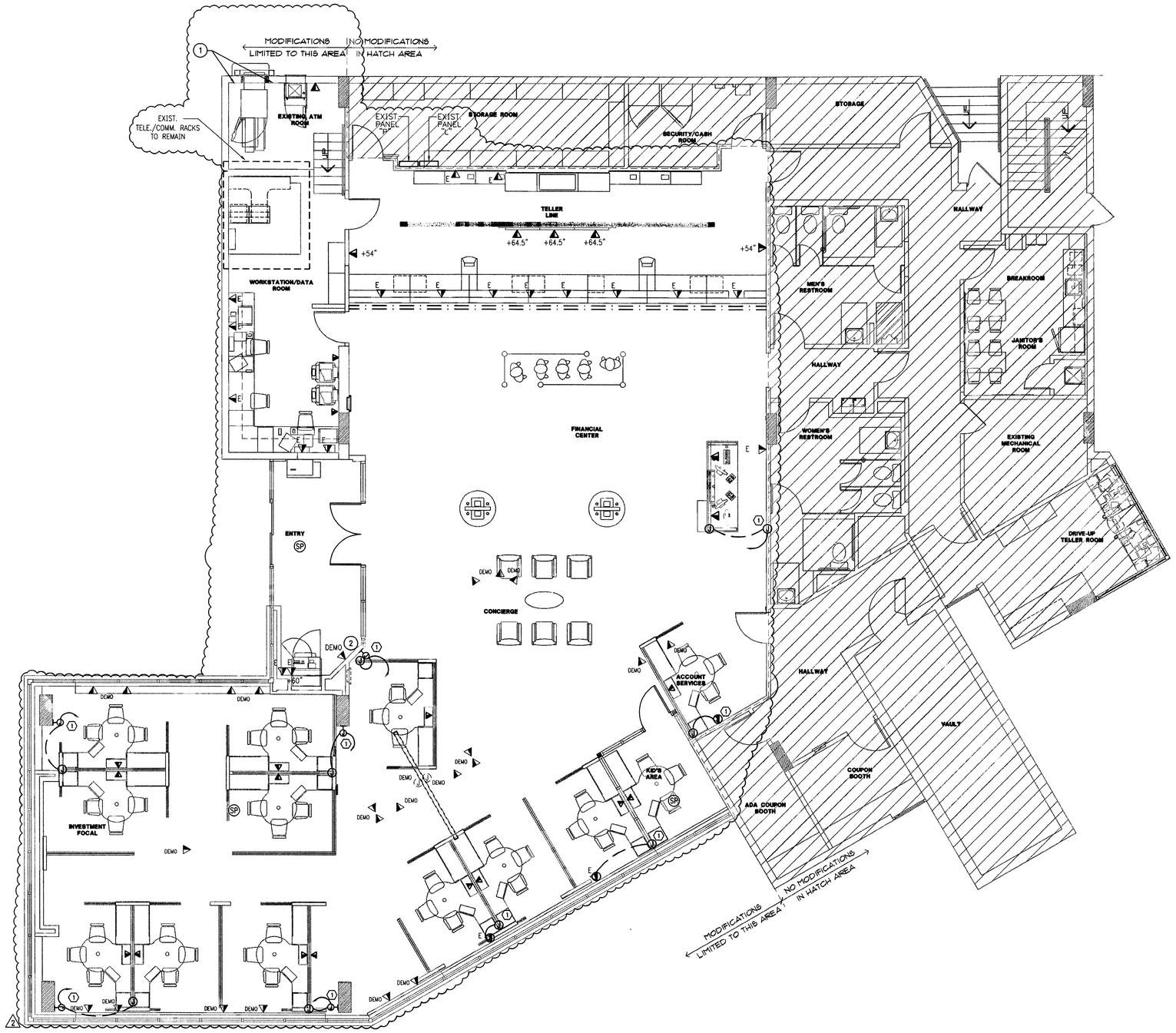

ELECTRICAL PLAN - SYSTEMS
3/16" = 1'-0"

NORTH

SYSTEM - DEMO GENERAL NOTES

1. REFER TO ARCHITECTURAL DEMOLITION PLANS FOR EXISTING TO BE REMOVED OR RELOCATED. REMOVE ASSOCIATED SYSTEMS DEVICES AND WIRING.
2. REMOVE ALL DEVICES, JUNCTION BOXES (IF POSSIBLE), CONDUIT (IF NECESSARY) AND WIRING BACK TO NEAREST JUNCTION BOX THAT IS TO REMAIN IN ALL AREAS BEING DEMOLISHED OR RENOVATED UNLESS OTHERWISE NOTED. FLOOR BOXES AND CONDUIT IN FLOOR SLAB WILL NOT BE REMOVED. TURN OVER ALL REMOVED MATERIALS TO OWNER AT OWNER'S DISCRETION.
3. ALL DEVICES SHOWN ON PLAN ARE EXISTING. REFER TO SYMBOL LEGEND FOR DEVICE DESCRIPTION.
4. EXISTING CONDITIONS SHOWN ON THIS DRAWING ARE TAKEN FROM ORIGINAL DRAWINGS AND FIELD INVESTIGATION. ALL EXISTING CONDITIONS MUST BE VERIFIED PRIOR TO BID. FIELD CONDITIONS SHALL GOVERN.
5. THE DEMOLITION PLAN IS NOT INCLUSIVE OF ALL ELECTRICAL DEVICES WITHIN THE PROJECT AREA. IT IS INTENDED TO PROVIDE THE CONTRACTOR WITH A GENERAL KNOWLEDGE OF THE EXISTING CONDITIONS WITHIN THE PROJECT AREA. ANY DISCREPANCIES OR CONDITIONS NOT SHOWN ON THIS PLAN SHALL BE BROUGHT TO THE ATTENTION OF THE PMC. THE CONTRACTOR IS RESPONSIBLE FOR ALL REQUIRED DEMOLITION WHETHER SHOWN ON THE PLANS OR NOT.
6. ALL CONDUITS SERVING OTHER SPACES, THAT RUN THROUGH THE PROJECT AREA SHALL REMAIN ACTIVE DURING CONSTRUCTION, SO AS NOT TO CAUSE ANY DISRUPTION TO THESE OTHER SPACES. IT IS THE CONTRACTOR'S RESPONSIBILITY TO INSURE THAT ALL CONDUITS, NEW OR EXISTING, WITHIN THE PROJECT AREA ARE PROPERLY SUPPORTED AND PROVIDED W/ BONDING BUSHINGS IN ACCORDANCE WITH THE NATIONAL ELECTRIC CODE.
7. ALL ITEMS REMOVED UNDER THIS PROJECT SHALL BE DISPOSED OF OR TURNED OVER TO THE OWNER AT THE OWNER'S DISCRETION.
8. THIS CONTRACTOR SHALL PROVIDE ELECTRICAL FOR PHASING WORK AS REQUIRED OR DIRECTED BY THE ARCHITECT, REFER TO ARCHITECTURAL PHASING PLAN. TEMPORARY ELECTRICAL SERVICES (POWER, LIGHTING, FIRE ALARM, ETC.) SHALL BE PROVIDED WHEN NEW WORK AFFECTS SERVICES NEEDING TO REMAIN ACTIVE.
9. THE CONTRACTOR SHALL INVESTIGATE THE PROJECT AREA PRIOR TO BID TO DETERMINE ALL REQUIRED DEMOLITION.

SYSTEM - DEMO PLAN NOTES

1. RELOCATE TELE./COMM. ON THIS WALL AS NECESSARY TO AVOID CONFLICTS DUE TO WALL RENOVATION. REUTILIZE EXISTING OUTLETS.
2. DEVICE TO BE REMOVED. REMOVE WIRING BACK TO NEAREST JUNCTION BOX THAT IS TO REMAIN. PROVIDE BLANK COVER AND PATCH TO MATCH SURROUNDING WALL. COORDINATE WITH ARCHITECTURAL.

SYSTEMS - NEW GENERAL NOTES

1. ALL SYSTEMS DEVICE LOCATIONS SHOWN ON PLAN SHALL CONSIST OF JUNCTION BOX AND CONDUIT ONLY. DEVICE, FACEPLATE AND WIRING TO BE PROVIDED BY OTHERS.
2. ALL SYSTEMS CONDUITS IN WALL SHALL BE MINIMUM 1"C, STUBBED UP AT LEAST 6" ABOVE TOP OF ACCESSIBLE CEILING GRID AND PROVIDED WITH A 90° BEND TOWARD SYSTEMS RACKS AND END BUSHINGS.
3. VERIFY MOUNTING AND LOCATION OF ALL OUTLETS WITH ARCHITECT PRIOR TO INSTALLATION.

SYSTEMS - NEW PLAN NOTES

1. JUNCTION BOX AND/OR CONDUIT IN FLOOR FOR FEED TO WORKSTATION. ROUTE 1" CONDUIT DOWN COLUMN INTO JUNCTION BOX OR SLAB. SAWCUT AND PATCH SLAB AS NECESSARY. COORDINATE CONNECTION WITH FURNITURE INSTALLATION REQUIREMENTS.

Electrical Plans Examiner
Lic. # PX 2611

INTERPLAN LLC
ARCHITECTURE
ENGINEERING
INTERIOR DESIGN
PROJECT MANAGEMENT

AA 003420
CA8660

933 LEE ROAD, FIRST FLOOR
ORLANDO, FLORIDA 32810
PH 407.645.5008
FX 407.629.9124

SEAL:

MALCOLM RUSSO
OCT 0 8 2009

CONSULTANT:

REVISIONS:

NO.	DATE	REMARKS
2	6-10-09	OWNER REVISIONS

CHASE

INTERIOR REBRANDING CONVERSION
MIAMI BEACH - ALTON ROAD
WAMU BLDG ID# 1924 CHASE STORE ID# 1742
1801 ALTON ROAD
MIAMI, FL 33139

COPYRIGHT © 2009
INTERPLAN LLC RESERVES COPYRIGHT & OTHER RIGHTS RESTRICTING THESE DOCUMENTS TO THE ORIGINAL SITE OR PURPOSE FOR WHICH THEY WERE PREPARED. REPRODUCTIONS, CHANGES OR ASSIGNMENTS ARE PROHIBITED.

PROJECT NO: 2009.0109

DATE: 04/30/2009

ELECTRICAL PLAN-SYSTEMS

E3.0

DRAWN BY: SN

CHECKED BY: MGR

48 HOURS PRIOR TO EXCAVATING
CONTRACTOR SHALL CALL FOR LOCATION
OF UNDERGROUND LINES
SUNSHINE One-CALL 1-800-432-4770
CITY OF MIAMI BEACH 305-673-7080

PUBLIC WORKS
PLAN REVIEW NOTICE
Phone 305-673-7080 Fax 305-673-7028

THIS PLAN REVIEW CONSTITUTES APPROVAL FOR OBTAINING BUILDING PERMITS ONLY.

All construction and/or use of equipment in the right-of-way and/or easements, requires a separate Public Works Department permit prior to start of construction.

Permit Requirements: Proof of existing sidewalk/swale area conditions (pictures) and/or posting of sidewalk/roadway bonds
(Public Works Inspection of the right-of-way will be required prior to final sign-off on the C.C. / C.O., or the release of bonds.)

Approved/Reviewed By: 6)16 Date: 10-9-2009

OFFICE COPY
CITY OF MIAMI BEACH
APPROVED FOR ISSUANCE BY
10/9/09
10/09/09
10/09/09
10/09/09
10/09/09
10/09/09
ENGINEERING: 10-9-2009
PUBLIC WORKS: 10-9-2009
STRUCTURAL: 10/9/09
ELEVATOR:

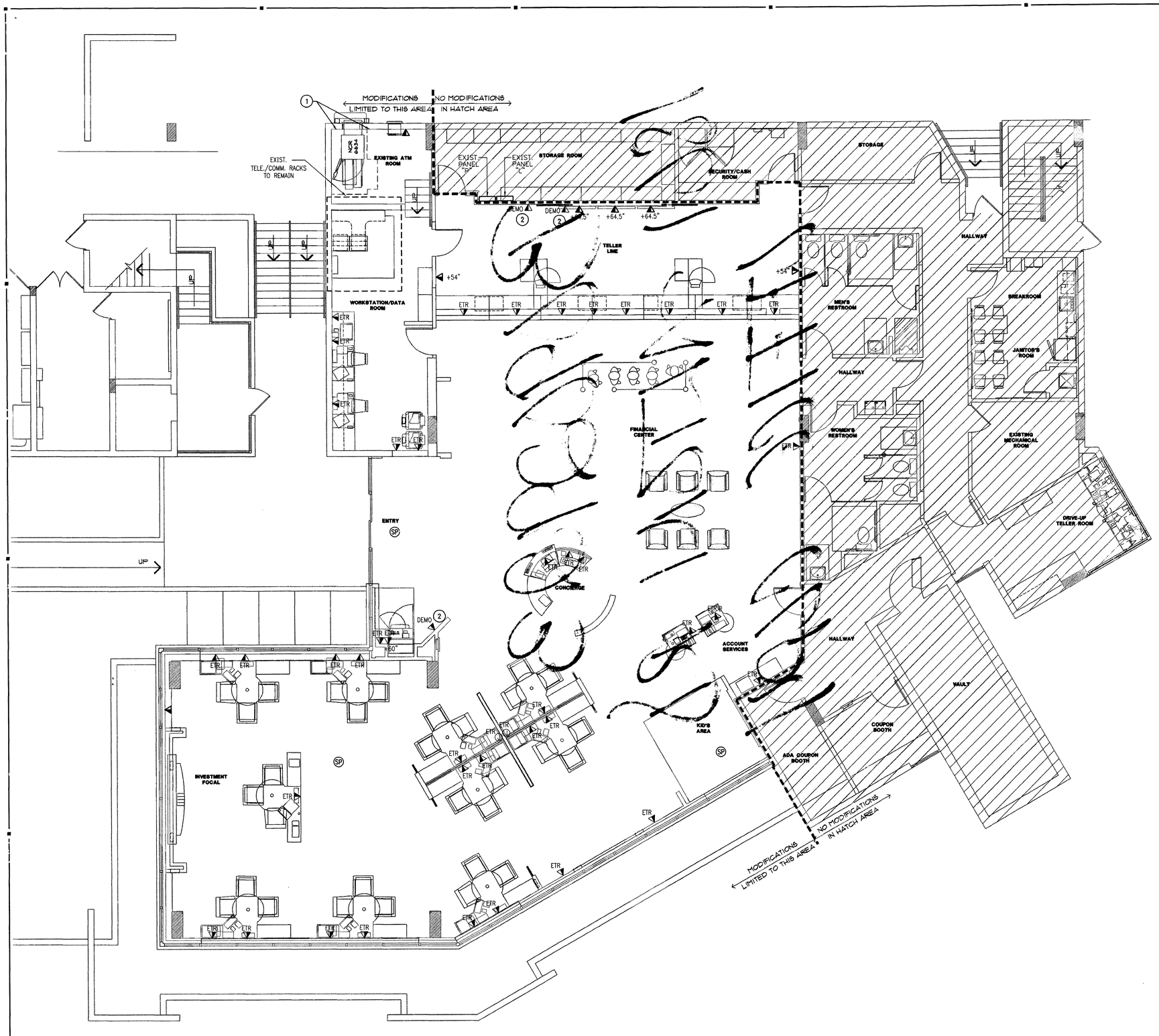

ELECTRICAL PLAN - SYSTEMS
3/16" = 1'-0"

NORTH

SYSTEM - DEMO GENERAL NOTES

1. REFER TO ARCHITECTURAL DEMOLITION PLANS FOR EXISITING TO BE REMOVED OR RELOCATED. REMOVE ASSOCIATED SYSTEMS DEVICES AND WIRING.
2. REMOVE ALL DEVICES, JUNCTION BOXES (IF POSSIBLE), CONDUIT (IF NECESSARY) AND WIRING BACK TO NEAREST JUNCTION BOX THAT IS TO REMAIN IN ALL AREAS BEING DEMOLISHED OR RENOVATED UNLESS OTHERWISE NOTED. FLOOR BOXES AND CONDUIT IN FLOOR SLAB WILL NOT BE REMOVED. TURN OVER ALL REMOVED MATERIALS TO OWNER AT OWNER'S DISCRETION.
3. ALL DEVICES SHOWN ON PLAN ARE EXISTING. REFER TO SYMBOL LEGEND FOR DEVICE DESCRIPTION.
4. EXISTING CONDITIONS SHOWN ON THIS DRAWING ARE TAKEN FROM ORIGINAL DRAWINGS AND FIELD INVESTIGATION. ALL EXISTING CONDITIONS MUST BE VERIFIED PRIOR TO BID. FIELD CONDITIONS SHALL GOVERN.
5. THE DEMOLITION PLAN IS NOT INCLUSIVE OF ALL ELECTRICAL DEVICES WITHIN THE PROJECT AREA. IT IS INTENDED TO PROVIDE THE CONTRACTOR WITH A GENERAL KNOWLEDGE OF THE EXISTING CONDITIONS WITHIN THE PROJECT AREA. ANY DISCREPANCIES OR CONDITIONS NOT SHOWN ON THIS PLAN SHALL BE BROUGHT TO THE ATTENTION OF THE PMC. THE CONTRACTOR IS RESPONSIBLE FOR ALL REQUIRED DEMOLITION WHETHER SHOWN ON THE PLANS OR NOT.
6. ALL CONDUITS SERVING OTHER SPACES, THAT RUN THROUGH THE PROJECT AREA SHALL REMAIN ACTIVE DURING CONSTRUCTION, SO AS NOT TO CAUSE ANY DISRUPTION TO THESE OTHER SPACES. IT IS THE CONTRACTOR'S RESPONSIBILITY TO INSURE THAT ALL CONDUITS, NEW OR EXISTING, WITHIN THE PROJECT AREA ARE PROPERLY SUPPORTED AND PROVIDED W/ BONDING BUSHINGS IN ACCORDANCE WITH THE NATIONAL ELECTRIC CODE.
7. ALL ITEMS REMOVED UNDER THIS PROJECT SHALL BE DISPOSED OF OR TURNED OVER TO THE OWNER AT THE OWNER'S DISCRETION.
8. THIS CONTRACTOR SHALL PROVIDE ELECTRICAL FOR PHASING WORK AS REQUIRED OR DIRECTED BY THE ARCHITECT, REFER TO ARCHITECTURAL PHASING PLAN. TEMPORARY ELECTRICAL SERVICES (POWER, LIGHTING, FIRE ALARM, ETC.) SHALL BE PROVIDED WHEN NEW WORK AFFECTS SERVICES NEEDING TO REMAIN ACTIVE.
9. THE CONTRACTOR SHALL INVESTIGATE THE PROJECT AREA PRIOR TO BID TO DETERMINE ALL REQUIRED DEMOLITION.

SYSTEM - DEMO PLAN NOTES

1. RELOCATE TELE./COMM. ON THIS WALL AS NECESSARY TO AVOID CONFLICTS DUE TO WALL RENOVATION. REUTILIZE EXISTING OUTLETS.
2. DEVICE TO BE REMOVED. REMOVE WIRING BACK TO NEAREST JUNCTION BOX THAT IS TO REMAIN. PROVIDE BLANK COVER AND PATCH TO MATCH SURROUNDING WALL. COORDINATE WITH ARCHITECTURAL.

SYSTEMS - NEW GENERAL NOTES

1. ALL SYSTEMS DEVICE LOCATIONS SHOWN ON PLAN SHALL CONSIST OF JUNCTION BOX AND CONDUIT ONLY. DEVICE, FACEPLATE AND WIRING TO BE PROVIDED BY OTHERS.
2. ALL SYSTEMS CONDUITS IN WALL SHALL BE MINIMUM 1"C, STUBBED UP AT LEAST 6" ABOVE TOP OF ACCESSIBLE CEILING GRID AND PROVIDED WITH A 90° BEND TOWARD SYSTEMS RACKS AND END BUSHINGS.
3. VERIFY MOUNTING AND LOCATION OF ALL OUTLETS WITH ARCHITECT PRIOR TO INSTALLATION.

INTERPLAN LLC
ARCHITECTURE
ENGINEERING
INTERIOR DESIGN
PROJECT MANAGEMENT
AA0003420
933 LEE ROAD, FIRST FLOOR
ORLANDO, FLORIDA 32810
PH 407.645.5008
FX 407.6[illegible]24

SEAL:

CONSULTANT:

REVISIONS:

NO.	DATE	REMARKS

CHASE

INTERIOR REBRANDING CONVERSION
MIAMI BEACH - ALTON ROAD
WAMU BLDG ID# 1924 CHASE STORE ID# 1742
1801 ALTON ROAD
MIAMI, FL 33139

COPYRIGHT © 2009
INTERPLAN LLC RESERVES COPYRIGHT & OTHER RIGHTS RESTRICTING THESE DOCUMENTS TO THE ORIGINAL SITE OR PURPOSE FOR WHICH THEY WERE PREPARED. REPRODUCTIONS, CHANGES OR ASSIGNMENTS ARE PROHIBITED.

PROJECT NO: 2009.0109
DATE: 04/30/2009

ELECTRICAL PLAN-SYSTEMS

E3.0

DRAWN BY: SN
CHECKED BY: MGR

M2009 006 748

000029746

DERM
PLAN REVIEW
FINAL
APPROVAL
DEPARTMENT OF ENVIRONMENTAL RESOURCES MANAGEMENT
CONDITIONS
SIGNATURE
DATE 6/4/09

B09029 23
1801 ALTON RD
OFFICE COPY

OFFICE COPY
CITY OF MIAMI BEACH
APPROVED FOR PERMIT BY
THE FOLLOWING:
BUILDING:
ZONING:
DRB/HPB:
CONCURRENCY:
PLUMBING:
ELECTRICAL:
MECHANICAL:
FIRE PREVENTION:
ENGINEERING:
PUBLIC WORKS:
STRUCTURAL:
LANDSCAPE:

B09029 23/1801 ALTON RD.

plan

NW SIGN INDUSTRIES
IDENTIFY WITH QUALITY

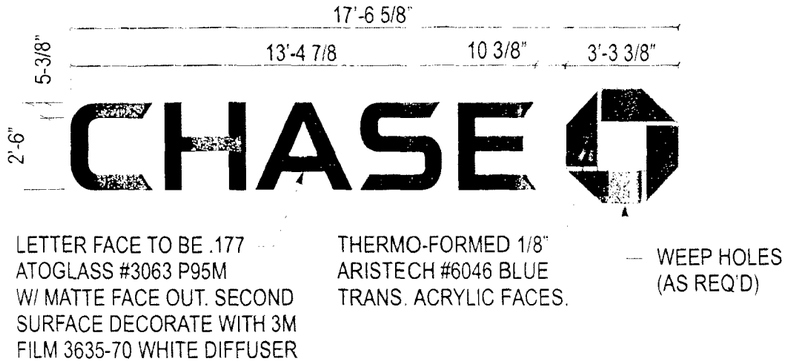

1 CHANNEL LETTERS - LIF-BLK-30
SCALE: ¼" = 1' 0"

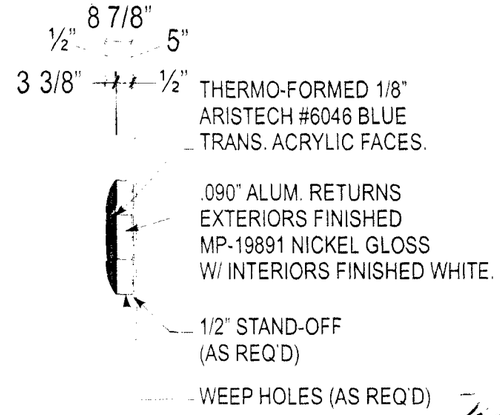

OCTAGON - SIDE VIEW
SCALE: ¼" = 1' 0"

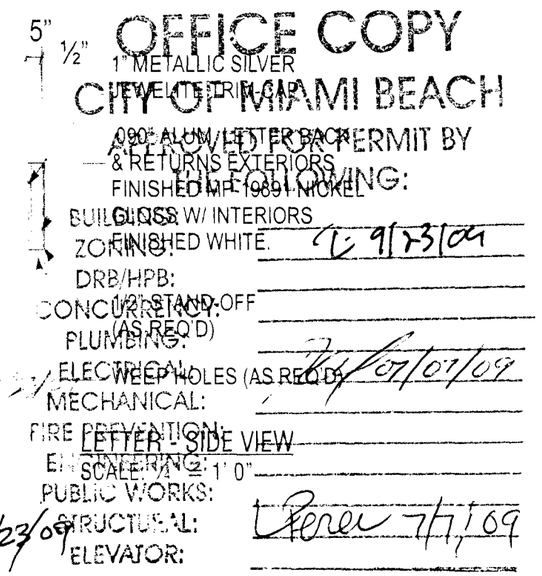

LETTER - SIDE VIEW
SCALE: ¼" = 1' 0"

OFFICE COPY
CITY OF MIAMI BEACH
APPROVED FOR PERMIT BY
THE FOLLOWING:

BUILDING:	
ZONING:	9/23/09
DRB/HPB:	
CONCURRENCY:	
PLUMBING:	
ELECTRICAL:	07/07/09
MECHANICAL:	
FIRE PREVENTION:	
ENGINEERING:	
PUBLIC WORKS:	
STRUCTURAL:	9/23/09
ELEVATOR:	7/7/09

181'

REMOVE-RESTORE - REMOVE AND RESTORE
SCALE: NTS

36'

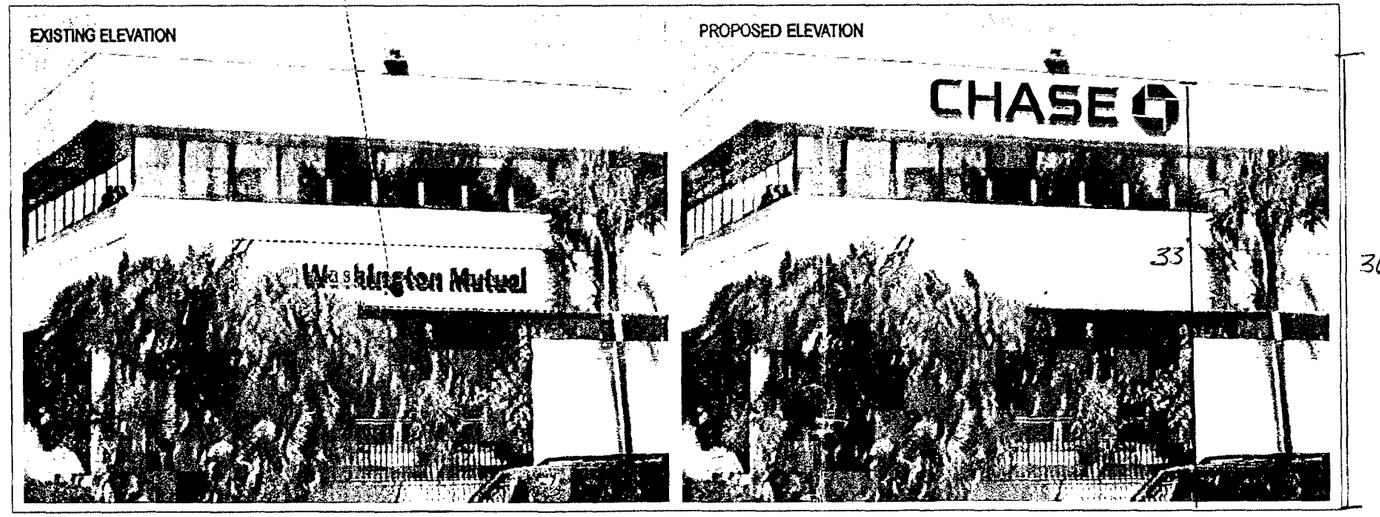

SIGN #1
WALL HEIGHT: 36'
WALL LENGTH: 181'
PROPOSED SIGN: 57SF
36' WALL AREA: 6516

SOUTH ELEVATION - LIF-BLK-30
Scale: NTS

CORPORATE OFFICE: 360 CRIDER AVENUE MOORESTOWN, NJ 08057 P - 856.802.1677 F - 856.802.0412
FLORIDA 2416 SAND LAKE ROAD ORLANDO, FL 32809 - TEXAS SERVICE CENTER 460 SOUTH BELTLINE ROAD SUITE 422 IRVING, TX 75060 - NORTH CAROLINA 120 CASCADE DRIVE CONCORD, NC 28027 - TEXAS 7303 BURLESON ROAD, SUITE 706 AUSTIN, TX 78744

THIS IS AN ORIGINAL UNPUBLISHED DRAWING CREATED BY NW SIGN INDUSTRIES, INC. IT IS PROVIDED FOR THE EXCLUSIVE USE BY THE CUSTOMER AND FOR THE PROJECT NAMED IN THIS TITLE BLOCK. IT SHALL NOT BE PROVIDED TO ANY OTHER SIGN MANUFACTURER OR USED FOR ANY OTHER PROJECT WITHOUT THE WRITTEN PERMISSION OF NW SIGN INDUSTRIES, INC. THIS DRAWING IS AN INSTRUMENT OF SERVICE AND SHALL REMAIN THE EXCLUSIVE PROPERTY OF NW SIGN INDUSTRIES, INC. ©NW SIGN INDUSTRIES, INC. 2008

NW SIGN INDUSTRIES
IDENTIFY WITH QUALITY

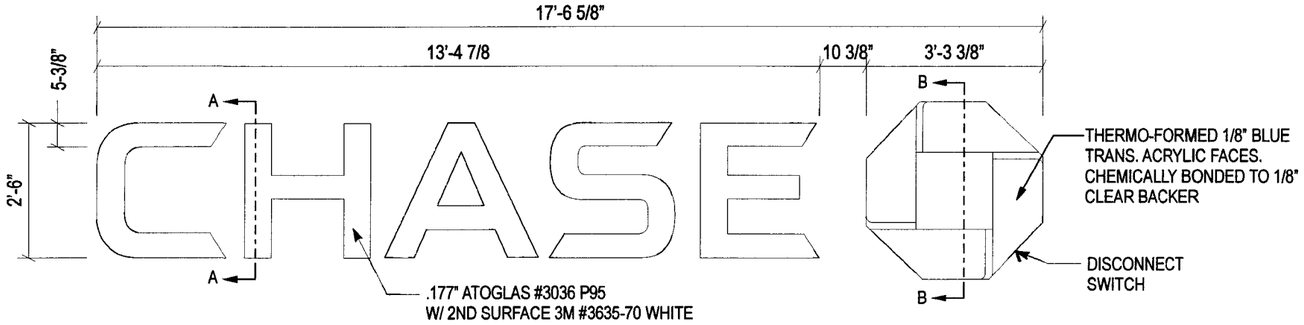

CHANNEL LETTERS (BLACK LTRS / BLUE OCTAGON) LIF-BLK-30-s (2) REQ'D
SCALE: 3/8" = 1' 0"

GENERAL NOTES:

-U.L. LISTED - FILE NUMBER E157099
-ALL ELECTRICAL WORK SHALL BE PERFORMED IN ACCORDANCE WITH "NEC" REF. SECTION 600
-ALL ELECTRICAL SIGN SECTIONS TO HAVE U.L. LABEL IN ACCORDANCE WITH "NEC" 600.3 AND MANUFACTURERS LABEL LOCATED NEXT TO DISCONNECT SWITCH
-ALL NON-CURRENT CARRYING METAL PARTS OF SIGN SHALL BE GROUNDED & BONDED IN ACCORDANCE WITH "NEC" 250
-ALL WIRING CONTAINED IN ENCLOSED AREAS WITH LAMPS SHALL BE FIXTURE RATED
-SPLICING OF CONDUCTORS SHALL BE MADE IN JUNCTION BOXES OR SIMILAR METAL ENCLOSURES
-AT THE POINT THAT ELECTRICAL CABLE PASSES THRU THE SIGN BOX, IT SHALL PASS THRU A U.L. LISTED RUBBER GROMMET

146 MPH WIND LOAD
IMPORTANCE FACTOR 1.0
EXPOSURE C
2007 FLORIDA BUILDING CODE
2009 SUPPLEMENT
SECTION 16 WIND LOAD
ASCE 7-05

ENCON SERVICES, INC.
AARON BIEDENBACH
2272 JAUDON ROAD
DOVER, FL 33527
813-655-3373
FLPE #52949, FLEB #9394

SIGN MOUNTING HEIGHT TO BE 40FT MAXIMUM

ESTIMATED SIGN WEIGHT
-28 lbs. PER LETTER
-52 lbs. PER LOGO

6/18/9

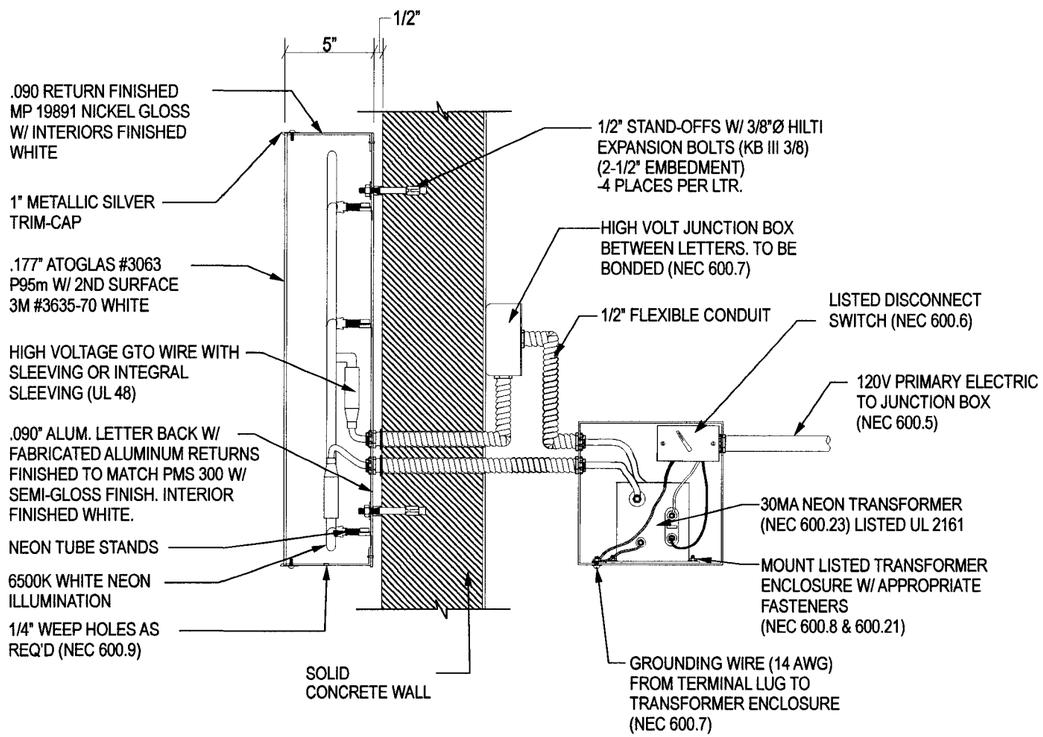

SECTION DETAIL A-A
SCALE: 1 1/2" = 1'-0"

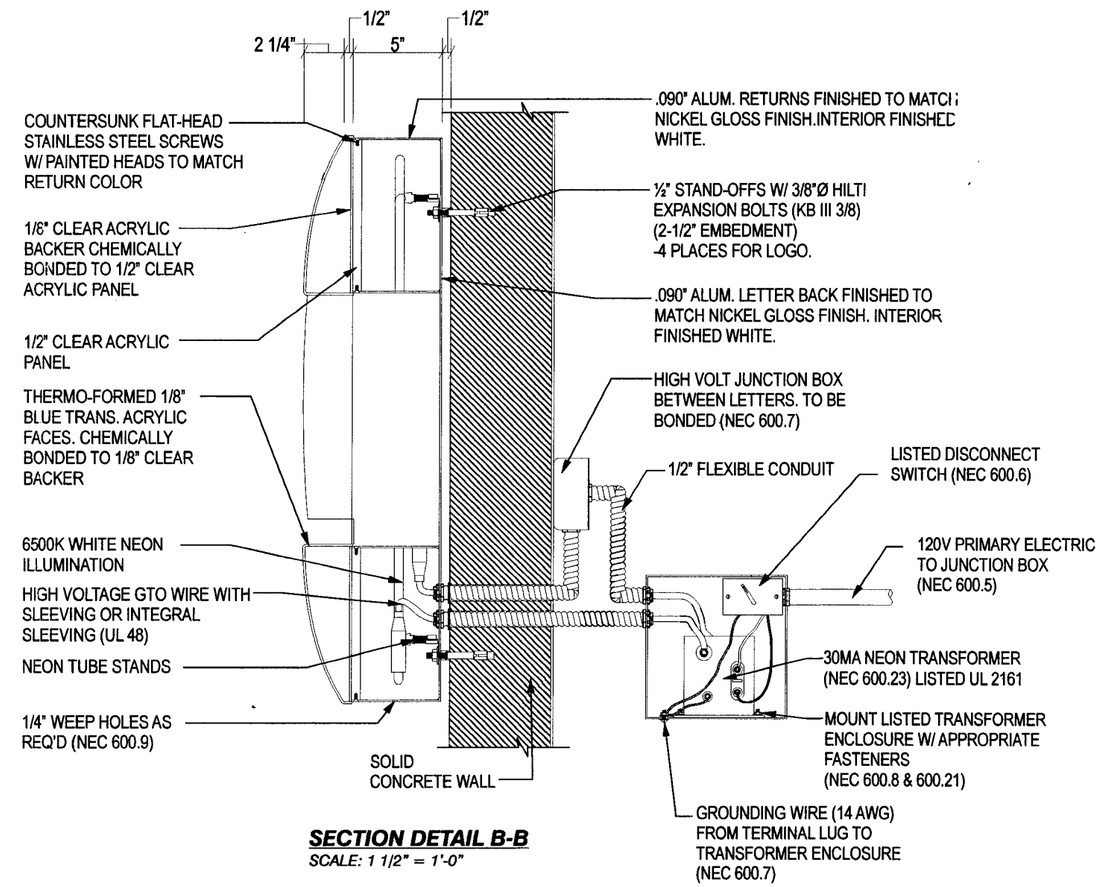

SECTION DETAIL B-B
SCALE: 1 1/2" = 1'-0"

CHASE 1801 Alton Road - Miami Beach, FL 33139 W1742 08-2167-8

THIS IS AN ORIGINAL UNPUBLISHED DRAWING CREATED BY NW SIGN INDUSTRIES, INC. IT IS PROVIDED FOR THE EXCLUSIVE USE BY THE CUSTOMER AND FOR THE PROJECT NAMED IN THIS TITLE BLOCK. IT SHALL NOT BE PROVIDED TO ANY OTHER SIGN MANUFACTURER OR USED FOR ANY OTHER PROJECT WITHOUT THE WRITTEN PERMISSION OF NW SIGN INDUSTRIES, INC. THIS DRAWING IS AN INSTRUMENT OF SERVICE AND SHALL REMAIN THE EXCLUSIVE PROPERTY OF NW SIGN INDUSTRIES, INC. ©NW SIGN INDUSTRIES, INC. 2008

EnCon Services, Inc.

Sign Design Calculations

Job Description
Chase Bank 1742
1801 Alton Rd.
Miami Beach, Florida
2'-6" Chase Letterset
Design per 2007 Florida Building Code, 2009 supplement, Section 16 Wind Load
ASCE 7-05

PREPARED BY: EnCon Services, Inc.
2272 Jaudon Road
Dover, FL 33527
813-655-3373
F 813-655-9814

Aaron Biedenbach, P.E.
FL PE #52949, FL EB 9394
OH PE 60756, OC #01893
KY PE #20281, P #2463
IN PE #PE 19600322
FL CBC #060535, QB #22527

Design Specifications	
Importance Factor	1
Kzt	1
Exposure Factor	C
Kd	1
Kz	1.04
V	146 (mph)
GCp-GCpi	1.28 Zone 4, H < 60 Feet
Wind Pressure	72.6 (psf)

Sign Information Per Letter		
Height	2.50	(ft)
Width	2.50	(ft)
Thickness	1.00	(ft)
Distance grade to top	40	(ft)

Wind Sheer Force 181.61 (lb)
Weight of Sign 62.5 (lb)

Total Sheer Force = 192.06 (lb)

Total Tension Force = 454.01 (lb)

6/18/9

	Required	Provided
Fastener size (Nominal)	3/8	3/8
Minimum number of fasteners Per letter	4	4
Sheer Force per fastener (lb)	48.0	280
Tension Force per fastener (lb)	113.5	352

Combination Tension and Sheer ratio **0.49 <1 O.K.**

THREADED ROD THROUGH WALL IS PREFERRED IN ALL INSTANCES. IF IT IS NOT POSSIBLE TO USE THREADED ROD, SEE CHART BELOW FOR APPROPRIATE ANCHOR SELECTION. SIZE AND NUMBER REQUIRED ARE NOTED IN THE CHART ABOVE.

WALL STRUCTURE	ANCHOR TYPE
SOLID CONCRETE	HILTI KWIK BOLT 3 EXPANSION ANCHOR (2-1/2" EMBEDMENT)

ALL ANCHORS SHALL BE CHOSEN AND PLACED IN ACCORDANCE WITH MANUFACTURERS INSTALLATION INSTRUCTIONS

NW SIGN INDUSTRIES
IDENTIFY WITH QUALITY

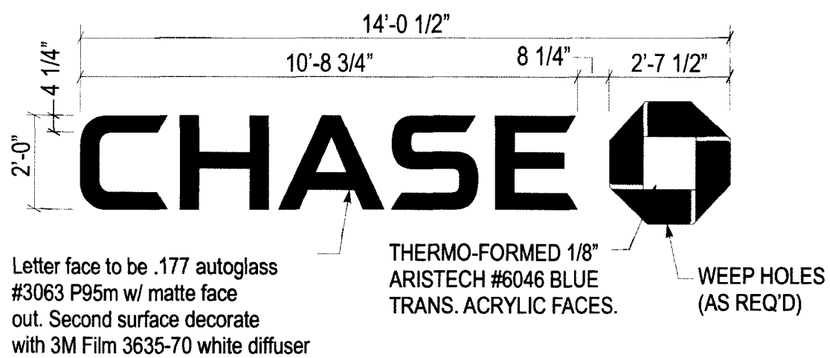

CHANNEL LETTERS LIF-BLK-24-s - ELEVATION
SCALE: 1/4" = 1' 0"

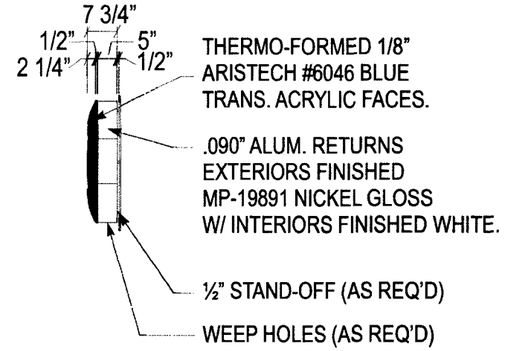

OCTAGON - SIDE VIEW
SCALE: 1/4" = 1' 0"

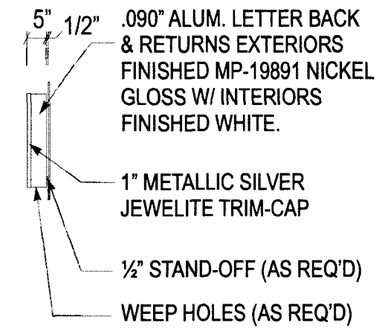

LETTER - SIDE VIEW
SCALE: 1/4" = 1' 0"

REMOVE-RESTORE - REMOVE AND RESTORE
SCALE: NTS

110'

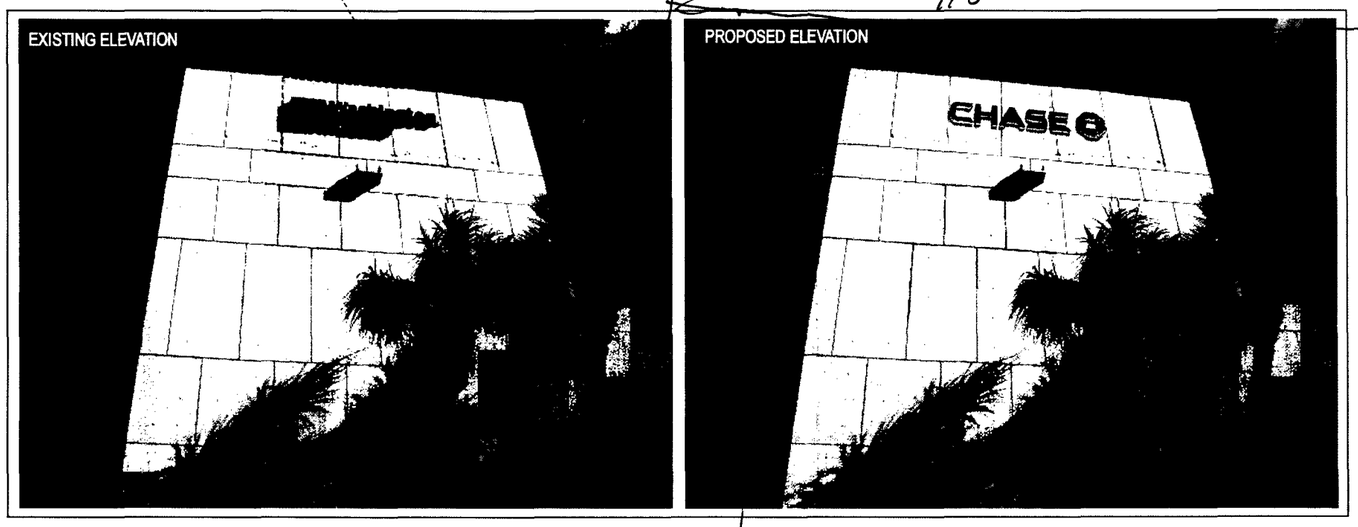

WEST ELEVATION - LIF-BLK-30
Scale: NTS

SIGN #2
WALL HEIGHT: 36'
WALL LENGTH: 110'
WALL AREA: 3960 sf
Proposed Sign Area: 37 sf

CLIENT	ADDRESS	SITE	PAGE NUMBER	DRAWING NUMBER
CHASE	1801 Alton Road - Miami Beach, FL 33139	W1742	5	08-2167-12

CORPORATE OFFICE: 360 CRIDER AVENUE MOORESTOWN, NJ 08057 P - 856.802.1677 F - 856.802.0412
FLORIDA 2416 SAND LAKE ROAD ORLANDO, FL 32809 - TEXAS SERVICE CENTER 460 SOUTH BELTLINE ROAD SUITE 422 IRVING, TX 75060 - NORTH CAROLINA 120 CASCADE DRIVE CONCORD, NC 28027 - TEXAS 7303 BURLESON ROAD, SUITE 706 AUSTIN, TX 78744

THIS IS AN ORIGINAL UNPUBLISHED DRAWING CREATED BY NW SIGN INDUSTRIES, INC. IT IS PROVIDED FOR THE EXCLUSIVE USE BY THE CUSTOMER AND FOR THE PROJECT NAMED IN THIS TITLE BLOCK. IT SHALL NOT BE PROVIDED TO ANY OTHER SIGN MANUFACTURER OR USED FOR ANY OTHER PROJECT WITHOUT THE WRITTEN PERMISSION OF NW SIGN INDUSTRIES, INC. THIS DRAWING IS AN INSTRUMENT OF SERVICE AND SHALL REMAIN THE EXCLUSIVE PROPERTY OF NW SIGN INDUSTRIES, INC. ©NW SIGN INDUSTRIES, INC. 2008

NW SIGN INDUSTRIES
IDENTIFY WITH QUALITY

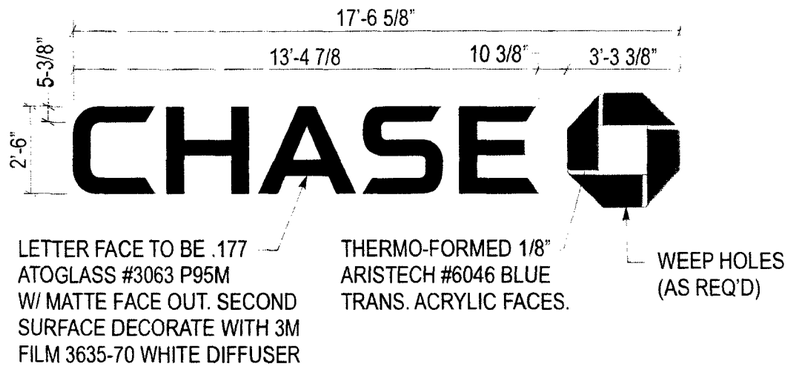

CHANNEL LETTERS- LIF-BLK-30-s - ELEVATION
SCALE: ¼" = 1' 0"

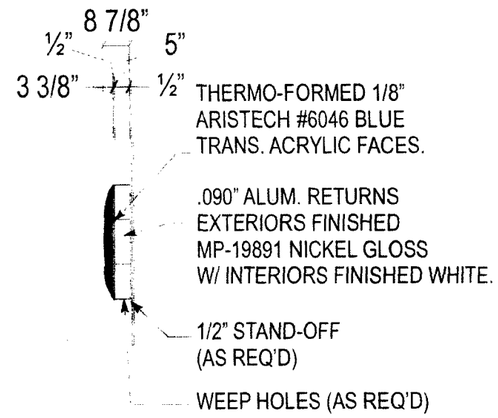

OCTAGON - SIDE VIEW
SCALE: ¼" = 1' 0"

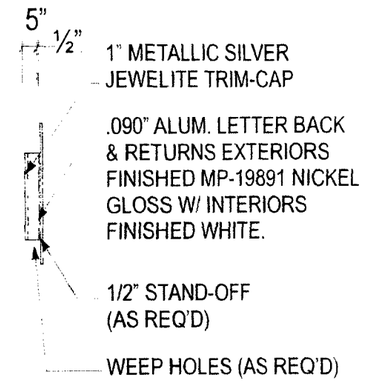

LETTER - SIDE VIEW
SCALE: ¼" = 1' 0"

REMOVE-RESTORE - REMOVE AND RESTORE
SCALE: NTS

SIGN 2

WALL HEIGH: 36
WALL LENGTH: 110'
PROPOSED SIGN: 57 SF

WEST ELEVATION - LIF-BLK-30
Scale: NTS

CORPORATE OFFICE: 360 CRIDER AVENUE MOORESTOWN, NJ 08057 P - 856.802.1677 F - 856.802.0412
FLORIDA 2416 SAND LAKE ROAD ORLANDO, FL 32809 - TEXAS SERVICE CENTER 460 SOUTH BELTLINE ROAD SUITE 422 IRVING, TX 75060 - NORTH CAROLINA 120 CASCADE DRIVE CONCORD, NC 28027 - TEXAS 7303 BURLESON ROAD, SUITE 706 AUSTIN, TX 78744

THIS IS AN ORIGINAL UNPUBLISHED DRAWING CREATED BY NW SIGN INDUSTRIES INC. IT IS PROVIDED FOR THE EXCLUSIVE USE BY THE CUSTOMER AND FOR THE PROJECT NAMED IN THIS TITLE BLOCK. IT SHALL NOT BE PROVIDED TO ANY OTHER SIGN MANUFACTURER OR USED FOR ANY OTHER PROJECT WITHOUT THE WRITTEN PERMISSION OF NW SIGN INDUSTRIES, INC. THIS DRAWING IS AN INSTRUMENT OF SERVICE AND SHALL REMAIN THE EXCLUSIVE PROPERTY OF NW SIGN INDUSTRIES, INC. ©NW SIGN INDUSTRIES, INC. 2008

NW SIGN INDUSTRIES
IDENTIFY WITH QUALITY

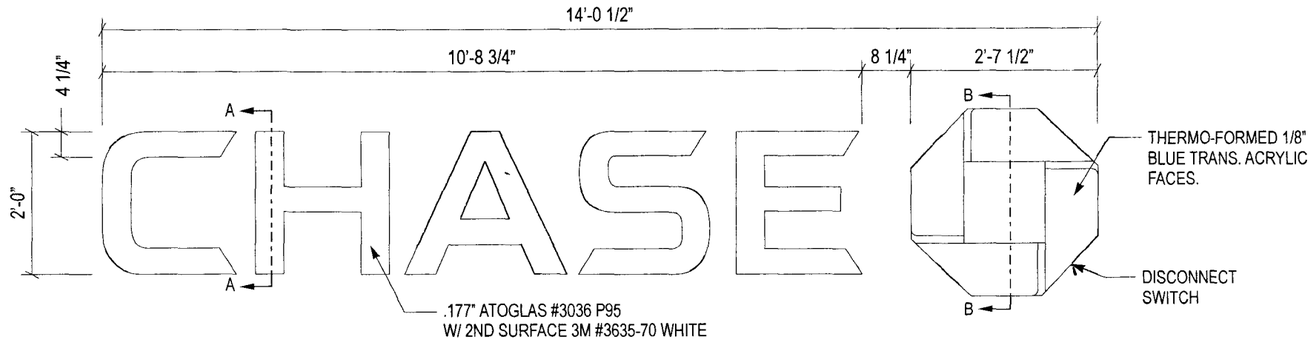

GENERAL NOTES:

-U.L. LISTED - FILE NUMBER E157099
-ALL ELECTRICAL WORK SHALL BE PERFORMED IN ACCORDANCE WITH "NEC" REF. SECTION 600
-ALL ELECTRICAL SIGN SECTIONS TO HAVE U.L. LABEL IN ACCORDANCE WITH "NEC" 600.3 AND MANUFACTURERS LABEL LOCATED NEXT TO DISCONNECT SWITCH
-ALL NON-CURRENT CARRYING METAL PARTS OF SIGN SHALL BE GROUNDED & BONDED IN ACCORDANCE WITH "NEC" 250
-ALL WIRING CONTAINED IN ENCLOSED AREAS WITH LAMPS SHALL BE FIXTURE RATED
-SPLICING OF CONDUCTORS SHALL BE MADE IN JUNCTION BOXES OR SIMILAR METAL ENCLOSURES
-AT THE POINT THAT ELECTRICAL CABLE PASSES THRU THE SIGN BOX, IT SHALL PASS THRU A U.L. LISTED RUBBER GROMMET

ESTIMATED SIGN WEIGHT
-16 lbs. PER LETTER
-32 lbs. PER LOGO

146 MPH WIND LOAD
IMPORTANCE FACTOR 1.0
EXPOSURE C
2007 FLORIDA BUILDING CODE
2009 SUPPLEMENT
SECTION 16 WIND LOAD
ASCE 7-05

ENCON SERVICES, INC.
AARON BIEDENBACH
2272 JAUDON ROAD
DOVER, FL 33527
813-655-3373
FLPE #52949, FLEB #9394

5/12/15

CHANNEL LETTERS (BLACK LTRS / BLUE OCTAGON) LIF-BLK-24-s - ELEVATION - (3) REQ'D
SCALE: 1/2" = 1' 0"

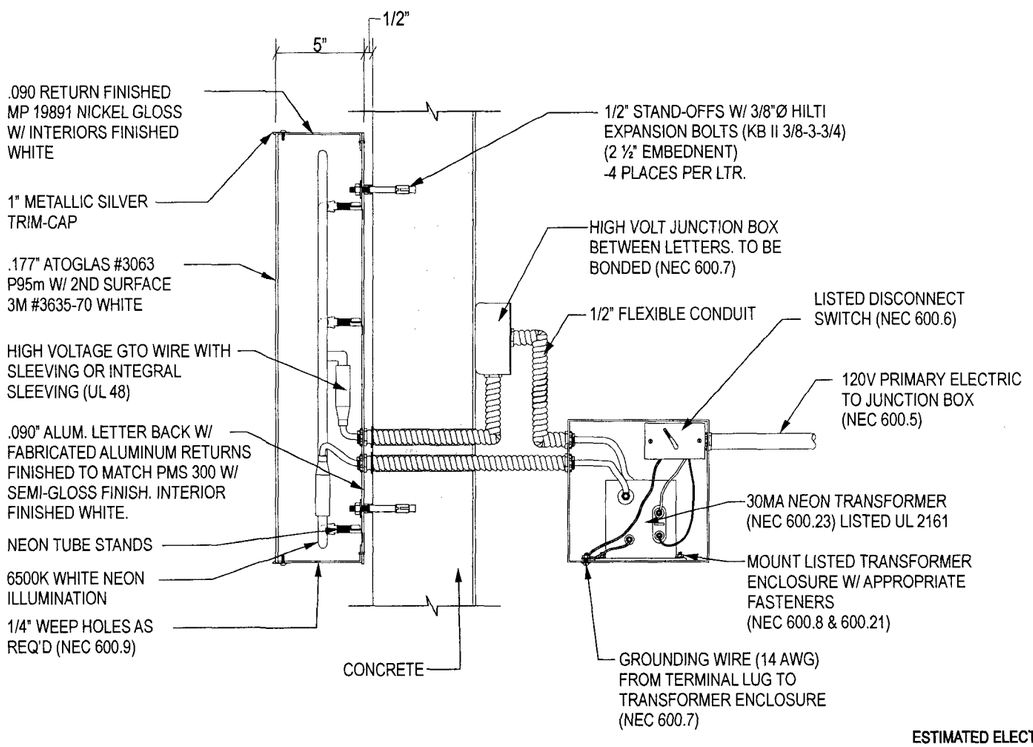

SECTION DETAIL A-A
SCALE: 1 1/2" = 1'-0"

ESTIMATED ELECTRICAL LOAD
6.3A @ 120VAC
ESTIMATED ELECTRICAL REQUIREMENTS
(1)20A circuit @ 120VAC

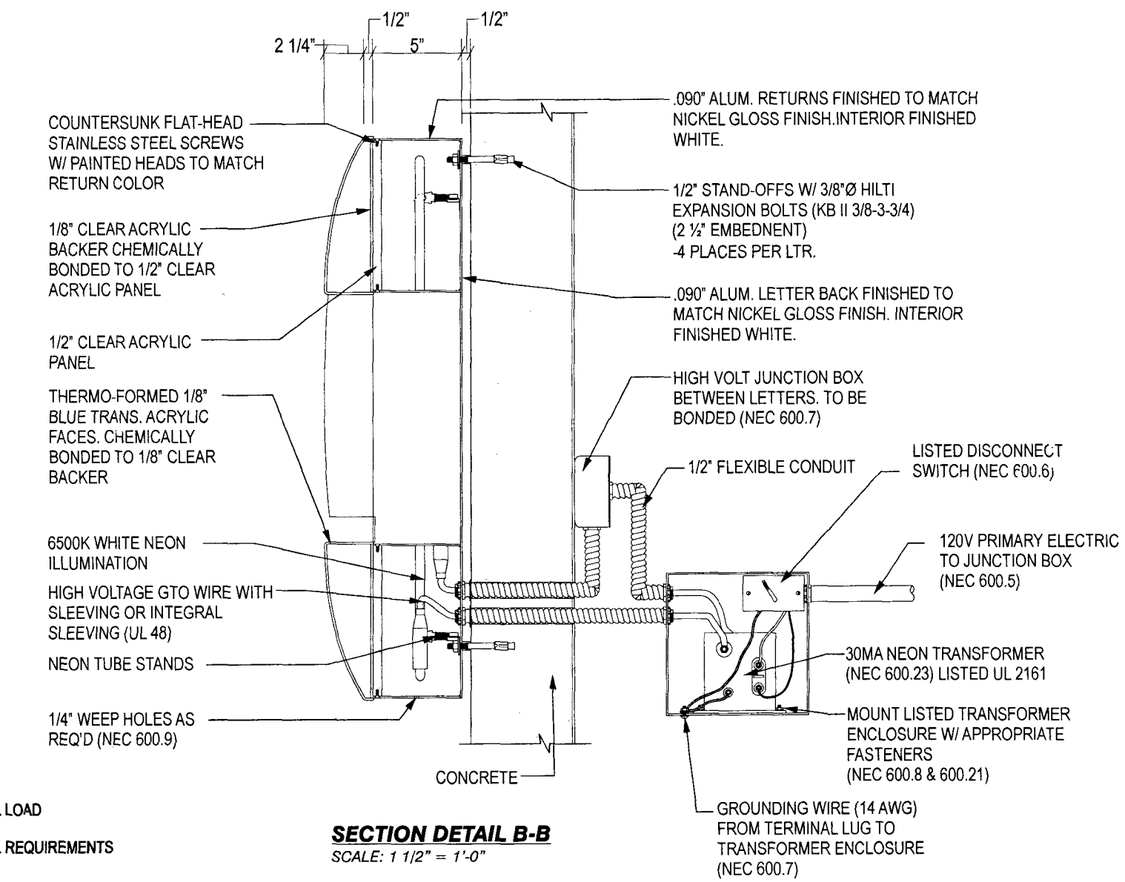

SECTION DETAIL B-B
SCALE: 1 1/2" = 1'-0"

CHASE | 940 IVES DAIRY RD, MIAMI FL | W1758 | 08-2169-5

CORPORATE OFFICE: 360 CRIDER AVENUE MOORESTOWN, NJ 08057 P - 856.802.1677 F - 856.802.0412
FLORIDA 2416 SAND LAKE ROAD ORLANDO, FL 32809 - TEXAS SERVICE CENTER 460 SOUTH BELTLINE ROAD SUITE 422 IRVING, TX 75060 - NORTH CAROLINA 120 CASCADE DRIVE CONCORD, NC 28027 - TEXAS 7303 BURLESON ROAD, SUITE 706 AUSTIN, TX 78744

THIS IS AN ORIGINAL UNPUBLISHED DRAWING CREATED BY NW SIGN INDUSTRIES, INC. IT IS PROVIDED FOR THE EXCLUSIVE USE BY THE CUSTOMER AND FOR THE PROJECT NAMED IN THIS TITLE BLOCK. IT SHALL NOT BE PROVIDED TO ANY OTHER SIGN MANUFACTURER OR USED FOR ANY OTHER PROJECT WITHOUT THE WRITTEN PERMISSION OF NW SIGN INDUSTRIES, INC. THIS DRAWING IS AN INSTRUMENT OF SERVICE AND SHALL REMAIN THE EXCLUSIVE PROPERTY OF NW SIGN INDUSTRIES, INC. ©NW SIGN INDUSTRIES, INC. 2008

EnCon Services, Inc.

Sign Design Calculations

Job Description
Chase Bank 1758
940 Ives Dairy Road
Miami, FL
2'-0" letterset
Design per 2007 Florida Building Code, 2009 supplement, Section 16 Wind Load
ASCE 7-05

PREPARED BY: EnCon Services, Inc.
2272 Jaudon Road
Dover, FL 33527
813-655-3373
F 813-655-9814

Aaron Biedenbach, P.E.
FL PE #52949, FL EB 9394
OH PE 60756, OC #01893
KY PE #20281, P #2463
IN PE #PE 19600322
FL CBC #060535, QB #22527

Design Specifications		
Importance Factor	1	
Kzt	1	
Exposure Factor	C	
Kd	1	
Kz	0.98	
V	146	mph
GCp-GCpi	1.28	Zone 4, h < 60
Wind Pressure	68.5	(psf)

Sign Information per Letter		
Height	2.00	(ft)
Width	2.00	(ft)
Thickness	1.00	(ft)
Distance grade to top	30	(ft)

Wind Sheer Force 136.90 (lb)
Weight of Sign 32 (lb)

Total Sheer Force = 140.59 (lb)

Total Tension Force = 273.81 (lb)

5/12/9

	Required	Provided
Fastener size (Nominal)	3/8	3/8
Minimum number of fasteners per letter	4	4
Sheer Force per fastener (lb)	35.1	280
Tension Force per fastener (lb)	68.5	352

Combination Tension and Sheer ratio **0.32 <1 O.K.**

WALL STRUCTURE	ANCHOR TYPE
SOLID CONCRETE	HILTI KBII EXPANSION ANCHOR (2-1/2" EMBEDMENT)

ALL ANCHORS SHALL BE CHOSEN AND PLACED IN ACCORDANCE WITH MANUFACTURERS INSTALLATION INSTRUCTIONS

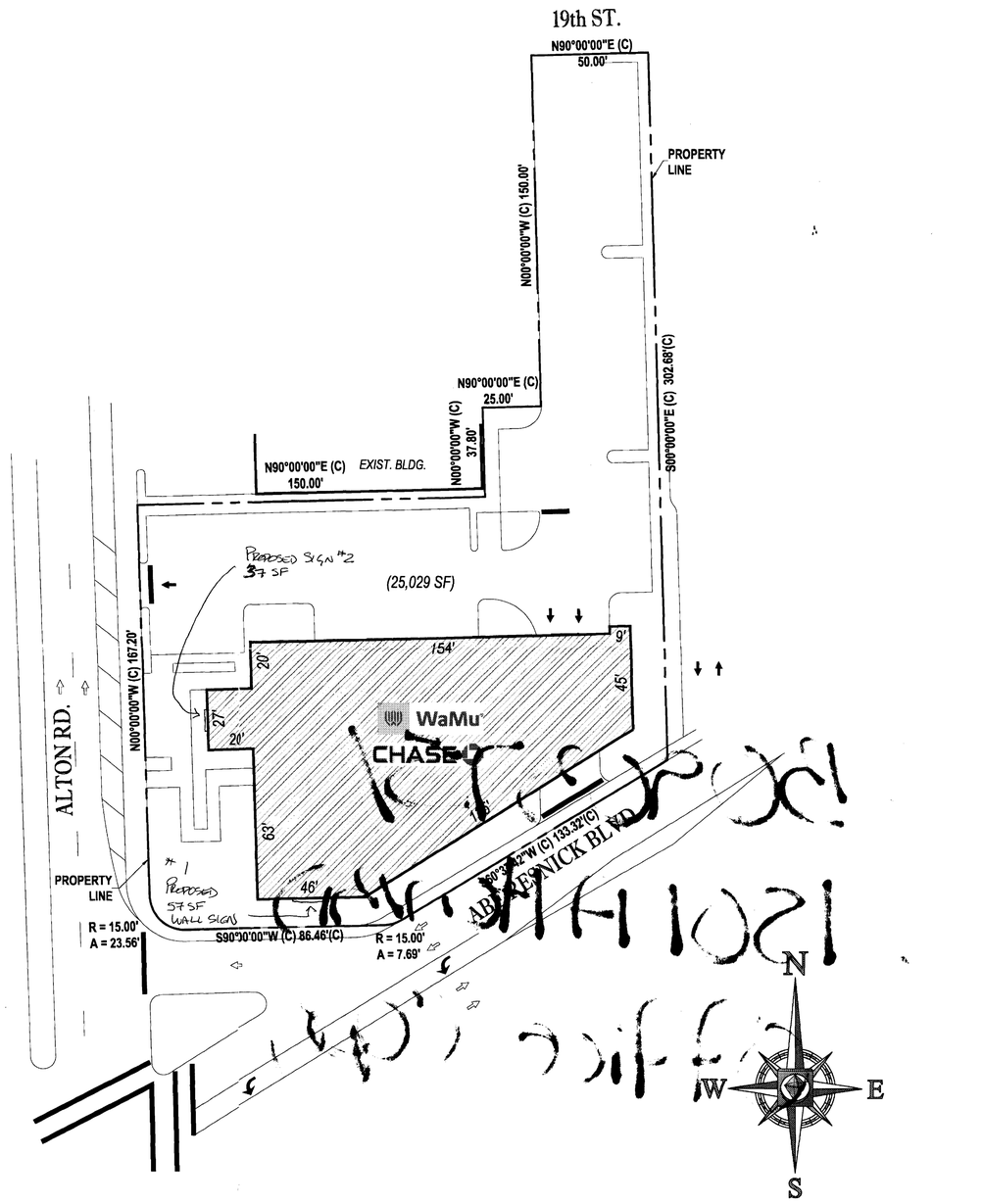

GRAPHIC SCALE

30 0 15 30 60 120

(IN FEET)
1 INCH = 30 FT

SOUTHERN VIEW OF SITE

NOT TO SCALE

WAMU BUILDING ID #1924
1801 ALTON RD.
MIAMI BEACH, FL 33139

LEGAL DESCRIPTION:
A PORTION OF:
THE EAST 50 FEET OF LOT 6, LOT 10, LESS THE NORTH 2.8 FEET THEREOF, AND LOT 11, IN BLOCK 11 OF "ISLAND VIEW SUBDIVISION", ACCORDING TO THE PLAT THEREOF, AS RECORDED IN PLAT BOOK 6, AT PAGE 115 OF THE PUBLIC RECORDS OF MIAMI-DADE COUNTY, FLORIDA.

NOTES:

1. THIS PLAN WAS PREPARED BASED ON A SPECIFIC PURPOSE SURVEY PREPARED BY PINNELL SURVEY, INC.

2. NO FREESTANDING SIGN LOCATED ON BANK PARCEL.

BOHLER ID #54

BOHLER ENGINEERING

CIVIL & CONSULTING ENGINEERS
SURVEYORS
PROJECT MANAGERS
ENVIRONMENTAL CONSULTANTS
LANDSCAPE ARCHITECTS

CORPORATE OFFICE:
◆ WARREN, NJ

OFFICES:
◆ SOUTHBOROUGH, MA ◆ BOWIE, MD
◆ ALBANY, NY ◆ TOMS RIVER, NJ
◆ PITTSFIELD, MA ◆ STERLING, VA
◆ PORCHOMOMA, NY ◆ WARRENTON, VA
◆ CHARLOTTE, NC ◆ WEST LAUDERDALE, FL
◆ CENTER VALLEY, PA

REVISIONS:

REV:	DATE:	COMMENT:	BY:

NOT APPROVED FOR CONSTRUCTION

PROJECT No.:	
DRAWN BY:	CAD
CHECKED BY:	JMG
DATE:	12/30/08
SCALE:	AS NOTED
CAD I.D.:	SIGN-EXHIBIT-54

PROJECT:

MIAMI BEACH/ ALTON ROAD LOCATION

FOR

WAMU BANK

#1924

1801 ALTON RD.
CITY OF MIAMI BEACH
MIAMI-DADE COUNTY
FLORIDA

BOHLER ENGINEERING

RADICE III
1000 CORPORATE DRIVE, SUITE 250
FORT LAUDERDALE, FL 33334
PH: (954) 202-7000
FX: (954) 202-7070
www.BohlerEngineering.com

JASON M. GUNTHER
PROFESSIONAL ENGINEER
February 6, 2009
FLORIDA LICENSE No. 58629
FLORIDA BUSINESS CERT. OF AUTH. No. 27528

SHEET TITLE:

SIGN EXHIBIT

SHEET NUMBER:

1
OF 1

Printed on Friday, February 06, 2009, 8:51 AM by Cesar DeLeSantos
C:\CHASE-WAMU REMARKS\MIAMI-DADE COUNTY\34-1924-MIAMI BEACH-ALTON ROAD\SIGN-EXHIBIT-54-------XLYOUT: #1924

B090375/
1801 Alton Rd
Office Copy

OFFICE COPY
CITY OF MIAMI BEACH
APPROVED FOR PERMIT BY
THE FOLLOWING:
BUILDING:
ZONING: 9/23/09
DERB/HPB:
CONCURRENCY:
PLUMBING:
ELECTRICAL: 9/23/09
MECHANICAL:
FIRE PREVENTION:
ENGINEERING:
PUBLIC WORKS:
STRUCTURAL: Perez 9/17/09 / Lopez 9/22/09
ELEVATOR:

NW SIGN INDUSTRIES
IDENTIFY WITH QUALITY

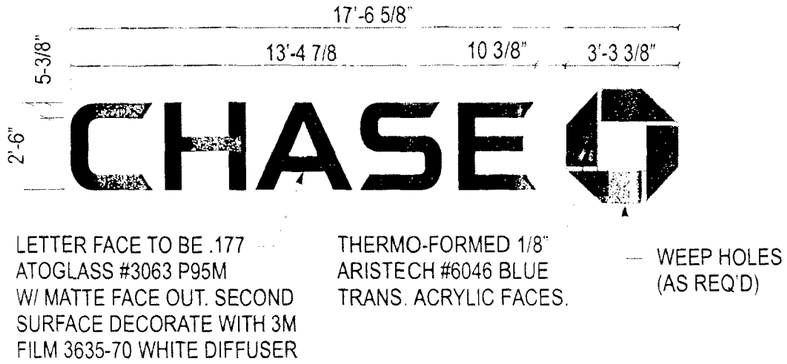

1 CHANNEL LETTERS - LIF-BLK-30
SCALE: ¼" = 1' 0"

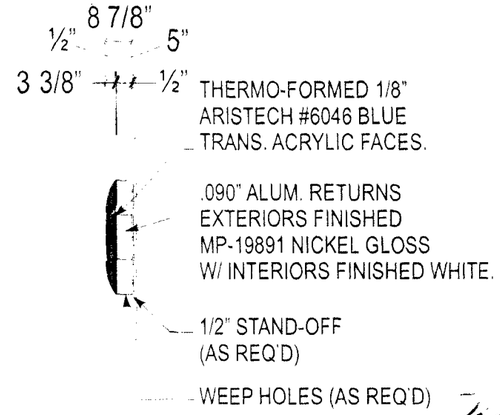

OCTAGON - SIDE VIEW
SCALE: ¼" = 1' 0"

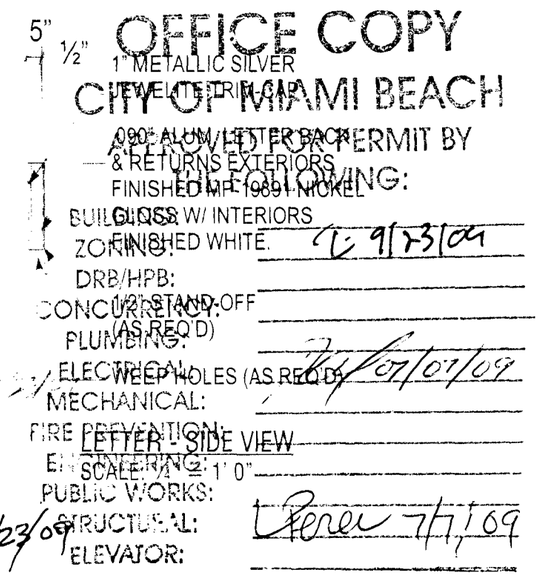

LETTER - SIDE VIEW
SCALE: ¼" = 1' 0"

OFFICE COPY
CITY OF MIAMI BEACH
APPROVED FOR PERMIT BY
THE FOLLOWING:

BUILDING:	
ZONING:	9/23/09
DRB/HPB:	
CONCURRENCY:	
PLUMBING:	
ELECTRICAL:	07/07/09
MECHANICAL:	
FIRE PREVENTION:	
ENGINEERING:	
PUBLIC WORKS:	
STRUCTURAL:	9/23/09
ELEVATOR:	7/7/09

181'

REMOVE-RESTORE - REMOVE AND RESTORE
SCALE: NTS

36'

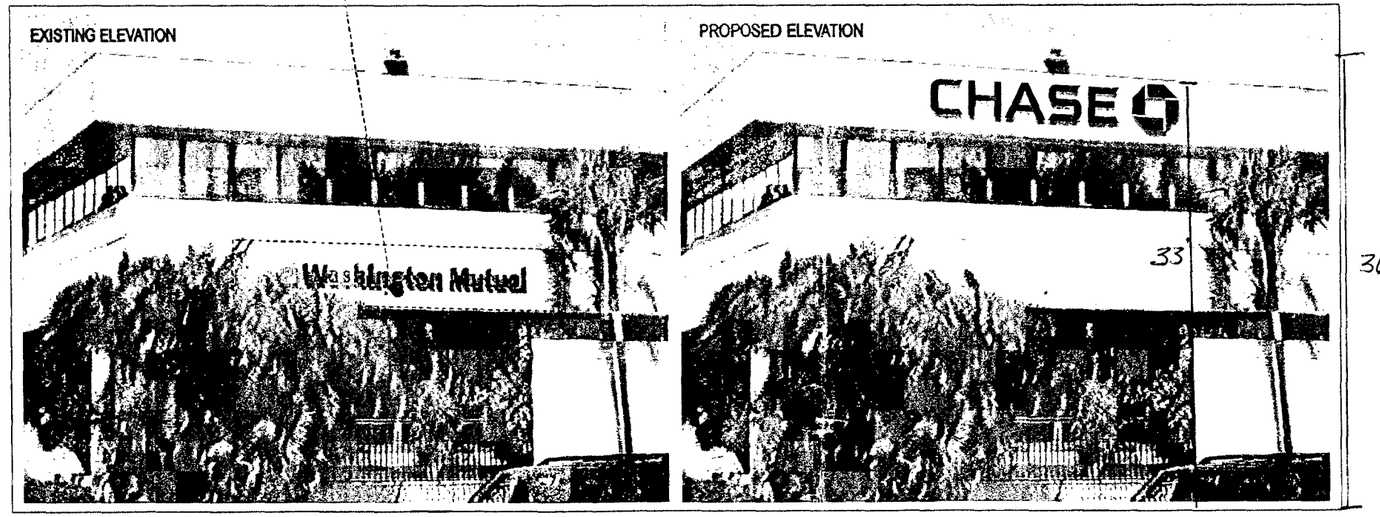

SIGN #1
WALL HEIGHT: 36'
WALL LENGTH: 181'
PROPOSED SIGN: 57SF
36' WALL AREA: 6516

SOUTH ELEVATION - LIF-BLK-30
Scale: NTS

CORPORATE OFFICE: 360 CRIDER AVENUE MOORESTOWN, NJ 08057 P - 856.802.1677 F - 856.802.0412
FLORIDA 2416 SAND LAKE ROAD ORLANDO, FL 32809 - TEXAS SERVICE CENTER 460 SOUTH BELTLINE ROAD SUITE 422 IRVING, TX 75060 - NORTH CAROLINA 120 CASCADE DRIVE CONCORD, NC 28027 - TEXAS 7303 BURLESON ROAD, SUITE 706 AUSTIN, TX 78744

THIS IS AN ORIGINAL UNPUBLISHED DRAWING CREATED BY NW SIGN INDUSTRIES, INC. IT IS PROVIDED FOR THE EXCLUSIVE USE BY THE CUSTOMER AND FOR THE PROJECT NAMED IN THIS TITLE BLOCK. IT SHALL NOT BE PROVIDED TO ANY OTHER SIGN MANUFACTURER OR USED FOR ANY OTHER PROJECT WITHOUT THE WRITTEN PERMISSION OF NW SIGN INDUSTRIES, INC. THIS DRAWING IS AN INSTRUMENT OF SERVICE AND SHALL REMAIN THE EXCLUSIVE PROPERTY OF NW SIGN INDUSTRIES, INC. ©NW SIGN INDUSTRIES, INC. 2008

NW SIGN INDUSTRIES
IDENTIFY WITH QUALITY

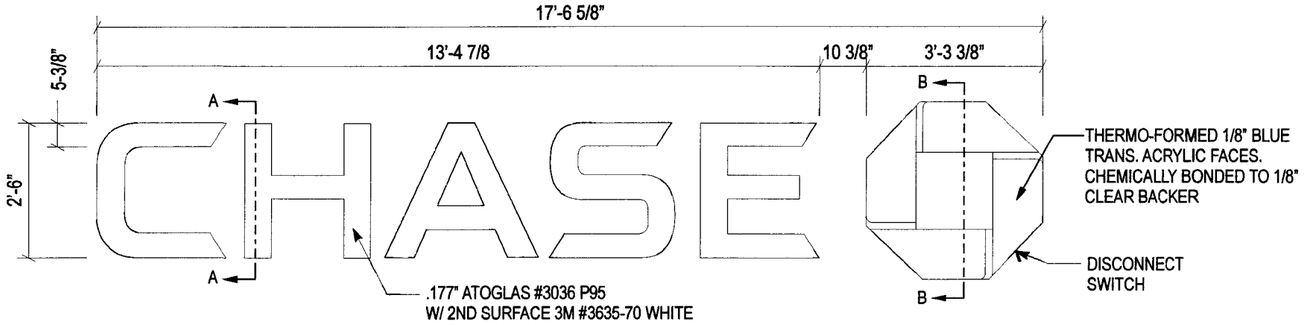

CHANNEL LETTERS (BLACK LTRS / BLUE OCTAGON) LIF-BLK-30-s (2) REQ'D
SCALE: 3/8" = 1' 0"

GENERAL NOTES:

-U.L. LISTED - FILE NUMBER E157099
-ALL ELECTRICAL WORK SHALL BE PERFORMED IN ACCORDANCE WITH "NEC" REF. SECTION 600
-ALL ELECTRICAL SIGN SECTIONS TO HAVE U.L. LABEL IN ACCORDANCE WITH "NEC" 600.3 AND MANUFACTURERS LABEL LOCATED NEXT TO DISCONNECT SWITCH
-ALL NON-CURRENT CARRYING METAL PARTS OF SIGN SHALL BE GROUNDED & BONDED IN ACCORDANCE WITH "NEC" 250
-ALL WIRING CONTAINED IN ENCLOSED AREAS WITH LAMPS SHALL BE FIXTURE RATED
-SPLICING OF CONDUCTORS SHALL BE MADE IN JUNCTION BOXES OR SIMILAR METAL ENCLOSURES
-AT THE POINT THAT ELECTRICAL CABLE PASSES THRU THE SIGN BOX, IT SHALL PASS THRU A U.L. LISTED RUBBER GROMMET

146 MPH WIND LOAD
IMPORTANCE FACTOR 1.0
EXPOSURE C
2007 FLORIDA BUILDING CODE
2009 SUPPLEMENT
SECTION 16 WIND LOAD
ASCE 7-05

ENCON SERVICES, INC.
AARON BIEDENBACH
2272 JAUDON ROAD
DOVER, FL 33527
813-655-3373
FLPE #52949, FLEB #9394

SIGN MOUNTING HEIGHT TO BE 40FT MAXIMUM

ESTIMATED SIGN WEIGHT
-28 lbs. PER LETTER
-52 lbs. PER LOGO

6/18/9

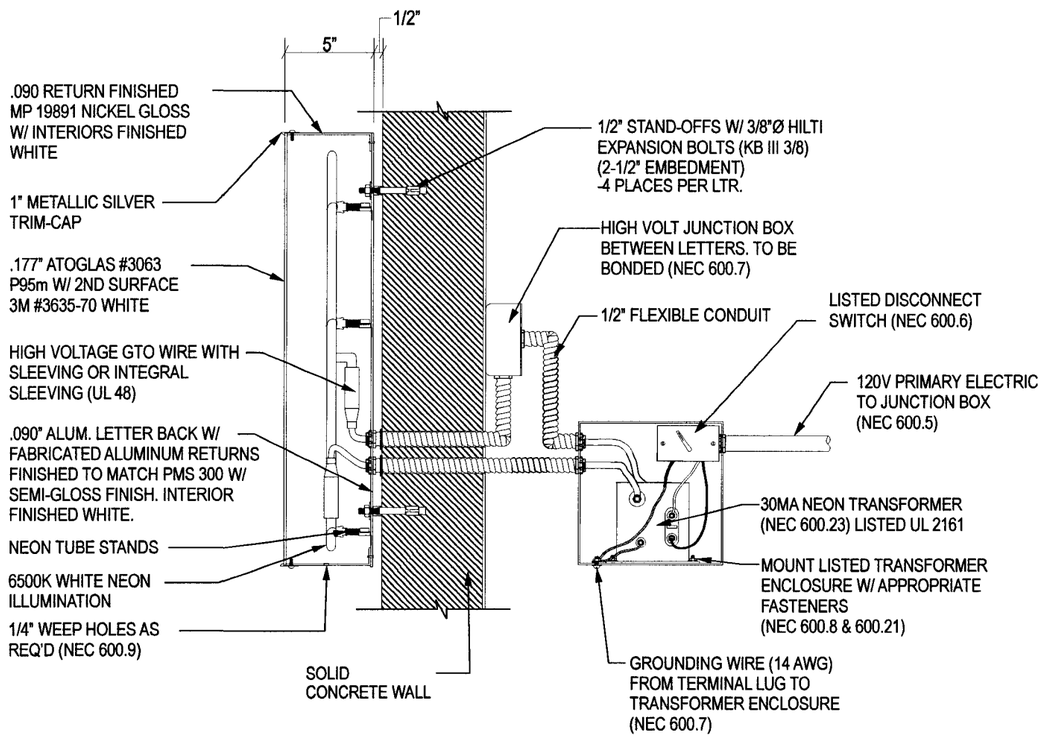

SECTION DETAIL A-A
SCALE: 1 1/2" = 1'-0"

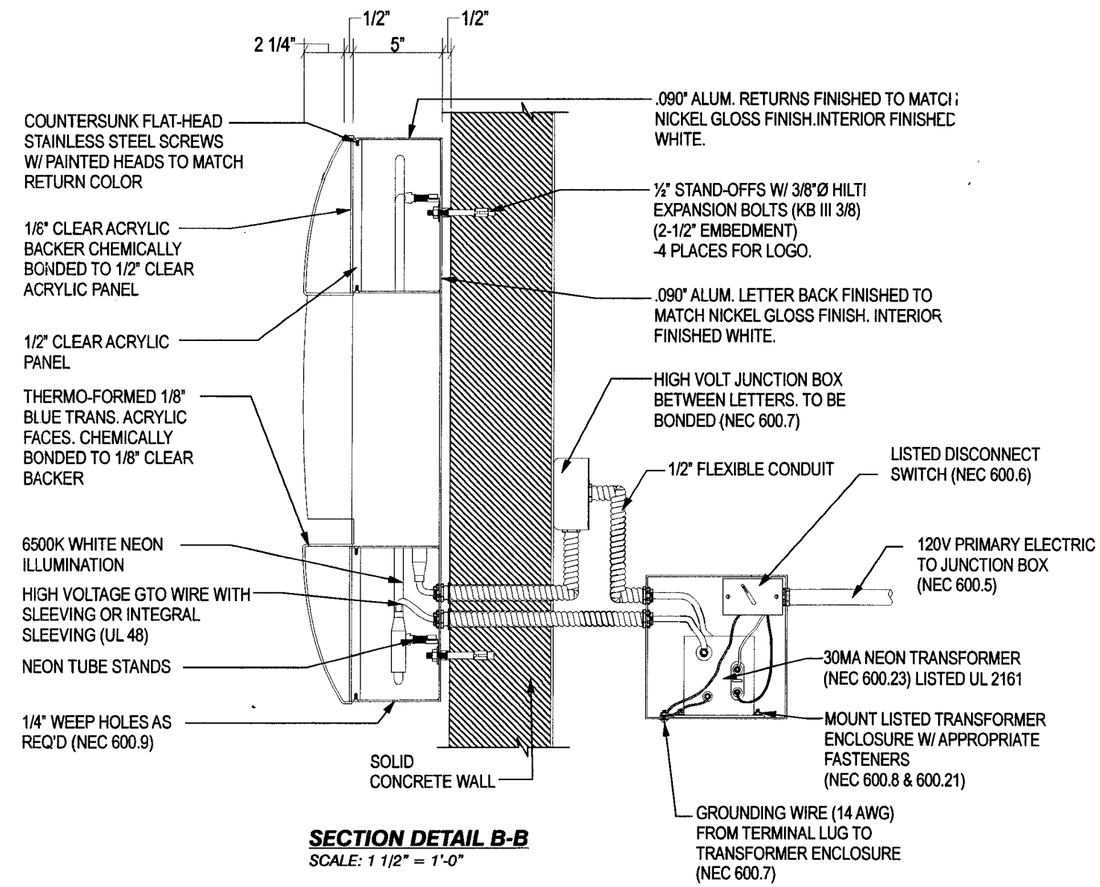

SECTION DETAIL B-B
SCALE: 1 1/2" = 1'-0"

CHASE 1801 Alton Road - Miami Beach, FL 33139 W1742 08-2167-8

THIS IS AN ORIGINAL UNPUBLISHED DRAWING CREATED BY NW SIGN INDUSTRIES, INC. IT IS PROVIDED FOR THE EXCLUSIVE USE BY THE CUSTOMER AND FOR THE PROJECT NAMED IN THIS TITLE BLOCK. IT SHALL NOT BE PROVIDED TO ANY OTHER SIGN MANUFACTURER OR USED FOR ANY OTHER PROJECT WITHOUT THE WRITTEN PERMISSION OF NW SIGN INDUSTRIES, INC. THIS DRAWING IS AN INSTRUMENT OF SERVICE AND SHALL REMAIN THE EXCLUSIVE PROPERTY OF NW SIGN INDUSTRIES, INC. ©NW SIGN INDUSTRIES, INC. 2008

EnCon Services, Inc.

Sign Design Calculations

Job Description
Chase Bank 1742
1801 Alton Rd.
Miami Beach, Florida
2'-6" Chase Letterset
Design per 2007 Florida Building Code, 2009 supplement, Section 16 Wind Load
ASCE 7-05

PREPARED BY: EnCon Services, Inc.
2272 Jaudon Road
Dover, FL 33527
813-655-3373
F 813-655-9814

Aaron Biedenbach, P.E.
FL PE #52949, FL EB 9394
OH PE 60756, OC #01893
KY PE #20281, P #2463
IN PE #PE 19600322
FL CBC #060535, QB #22527

Design Specifications	
Importance Factor	1
Kzt	1
Exposure Factor	C
Kd	1
Kz	1.04
V	146 (mph)
GCp-GCpi	1.28 Zone 4, H < 60 Feet
Wind Pressure	72.6 (psf)

Sign Information Per Letter		
Height	2.50	(ft)
Width	2.50	(ft)
Thickness	1.00	(ft)
Distance grade to top	40	(ft)

Wind Sheer Force 181.61 (lb)
Weight of Sign 62.5 (lb)

Total Sheer Force = 192.06 (lb)

Total Tension Force = 454.01 (lb)

6/18/9

	Required	Provided
Fastener size (Nominal)	3/8	3/8
Minimum number of fasteners Per letter	4	4
Sheer Force per fastener (lb)	48.0	280
Tension Force per fastener (lb)	113.5	352

Combination Tension and Sheer ratio **0.49 <1 O.K.**

THREADED ROD THROUGH WALL IS PREFERRED IN ALL INSTANCES. IF IT IS NOT POSSIBLE TO USE THREADED ROD, SEE CHART BELOW FOR APPROPRIATE ANCHOR SELECTION. SIZE AND NUMBER REQUIRED ARE NOTED IN THE CHART ABOVE.

WALL STRUCTURE	ANCHOR TYPE
SOLID CONCRETE	HILTI KWIK BOLT 3 EXPANSION ANCHOR (2-1/2" EMBEDMENT)

ALL ANCHORS SHALL BE CHOSEN AND PLACED IN ACCORDANCE WITH MANUFACTURERS INSTALLATION INSTRUCTIONS

NW SIGN INDUSTRIES
IDENTIFY WITH QUALITY

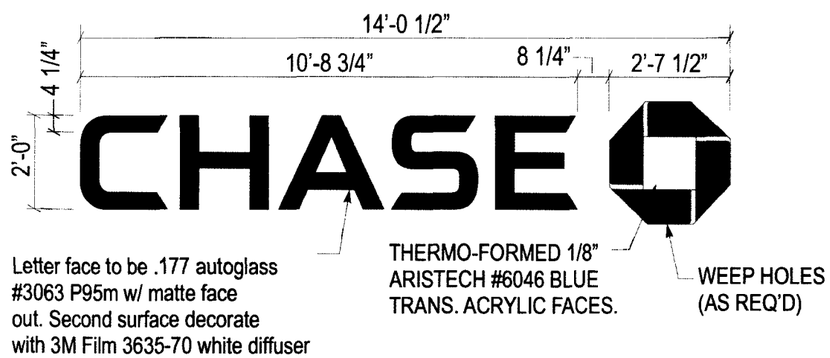

CHANNEL LETTERS LIF-BLK-24-s - ELEVATION
SCALE: 1/4" = 1' 0"

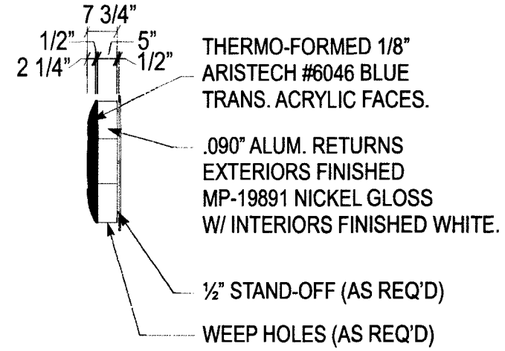

OCTAGON - SIDE VIEW
SCALE: 1/4" = 1' 0"

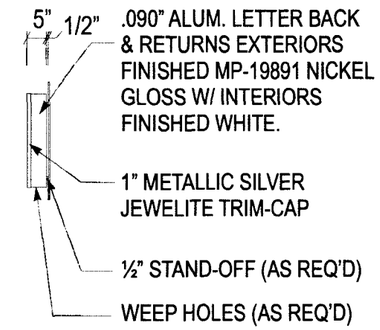

LETTER - SIDE VIEW
SCALE: 1/4" = 1' 0"

REMOVE-RESTORE - REMOVE AND RESTORE
SCALE: NTS

110'

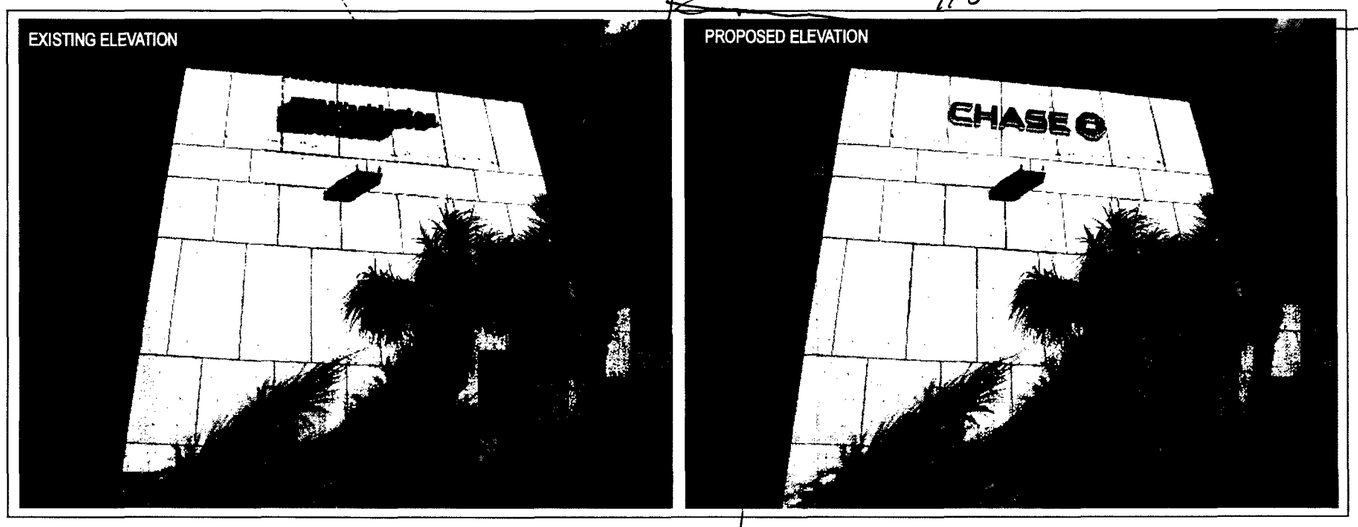

WEST ELEVATION - LIF-BLK-30
Scale: NTS

SIGN #2
WALL HEIGHT: 36'
WALL LENGTH: 110'
WALL AREA: 3960 sf
Proposed Sign Area: 37 sf

CLIENT	ADDRESS	SITE	PAGE NUMBER	DRAWING NUMBER
CHASE	1801 Alton Road - Miami Beach, FL 33139	W1742	5	08-2167-12

CORPORATE OFFICE: 360 CRIDER AVENUE MOORESTOWN, NJ 08057 P - 856.802.1677 F - 856.802.0412
FLORIDA 2416 SAND LAKE ROAD ORLANDO, FL 32809 - TEXAS SERVICE CENTER 460 SOUTH BELTLINE ROAD SUITE 422 IRVING, TX 75060 - NORTH CAROLINA 120 CASCADE DRIVE CONCORD, NC 28027 - TEXAS 7303 BURLESON ROAD, SUITE 706 AUSTIN, TX 78744

THIS IS AN ORIGINAL UNPUBLISHED DRAWING CREATED BY NW SIGN INDUSTRIES, INC. IT IS PROVIDED FOR THE EXCLUSIVE USE BY THE CUSTOMER AND FOR THE PROJECT NAMED IN THIS TITLE BLOCK. IT SHALL NOT BE PROVIDED TO ANY OTHER SIGN MANUFACTURER OR USED FOR ANY OTHER PROJECT WITHOUT THE WRITTEN PERMISSION OF NW SIGN INDUSTRIES, INC. THIS DRAWING IS AN INSTRUMENT OF SERVICE AND SHALL REMAIN THE EXCLUSIVE PROPERTY OF NW SIGN INDUSTRIES, INC. ©NW SIGN INDUSTRIES, INC. 2008

NW SIGN INDUSTRIES
IDENTIFY WITH QUALITY

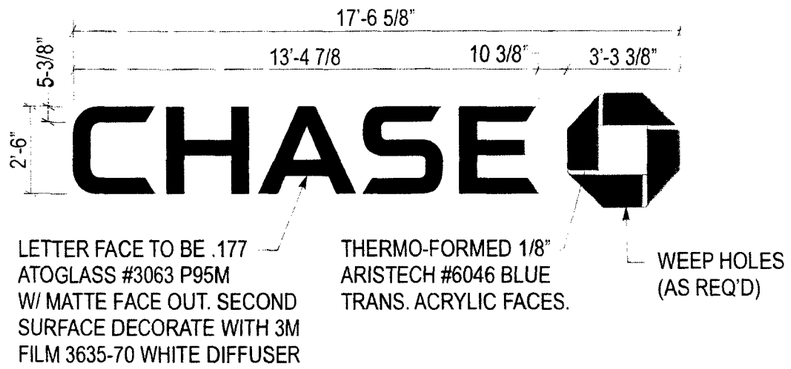

CHANNEL LETTERS- LIF-BLK-30-s - ELEVATION
SCALE: ¼" = 1' 0"

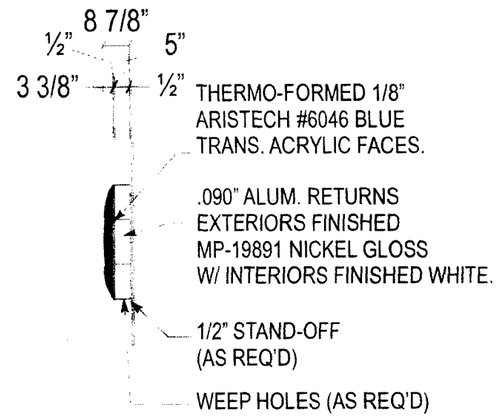

OCTAGON - SIDE VIEW
SCALE: ¼" = 1' 0"

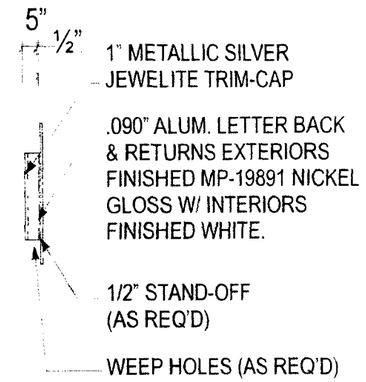

LETTER - SIDE VIEW
SCALE: ¼" = 1' 0"

REMOVE-RESTORE - REMOVE AND RESTORE
SCALE: NTS

SIGN 2

WALL HEIGH: 36
WALL LENGTH: 110'
PROPOSED SIGN: 57 SF

WEST ELEVATION - LIF-BLK-30
Scale: NTS

CORPORATE OFFICE: 360 CRIDER AVENUE MOORESTOWN, NJ 08057 P - 856.802.1677 F - 856.802.0412
FLORIDA 2416 SAND LAKE ROAD ORLANDO, FL 32809 - TEXAS SERVICE CENTER 460 SOUTH BELTLINE ROAD SUITE 422 IRVING, TX 75060 - NORTH CAROLINA 120 CASCADE DRIVE CONCORD, NC 28027 - TEXAS 7303 BURLESON ROAD, SUITE 706 AUSTIN, TX 78744

THIS IS AN ORIGINAL UNPUBLISHED DRAWING CREATED BY NW SIGN INDUSTRIES INC. IT IS PROVIDED FOR THE EXCLUSIVE USE BY THE CUSTOMER AND FOR THE PROJECT NAMED IN THIS TITLE BLOCK. IT SHALL NOT BE PROVIDED TO ANY OTHER SIGN MANUFACTURER OR USED FOR ANY OTHER PROJECT WITHOUT THE WRITTEN PERMISSION OF NW SIGN INDUSTRIES, INC. THIS DRAWING IS AN INSTRUMENT OF SERVICE AND SHALL REMAIN THE EXCLUSIVE PROPERTY OF NW SIGN INDUSTRIES, INC. ©NW SIGN INDUSTRIES, INC. 2008

NW SIGN INDUSTRIES
IDENTIFY WITH QUALITY

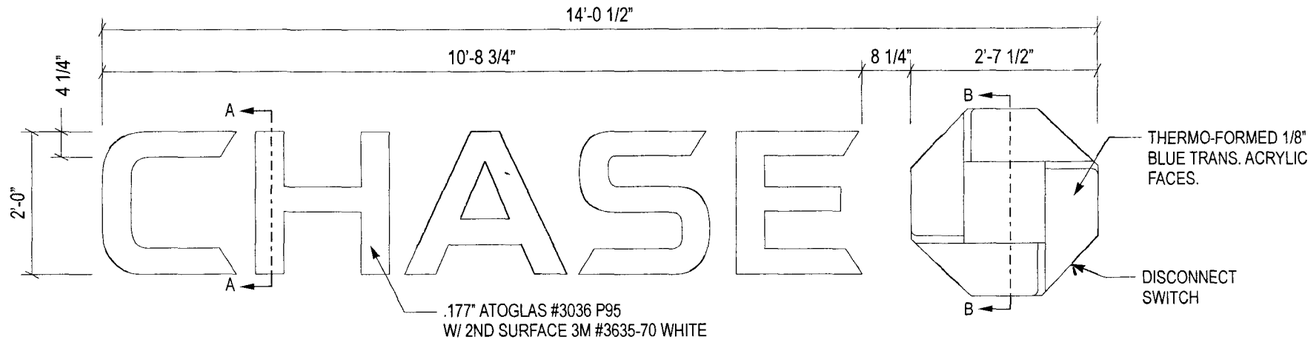

GENERAL NOTES:

-U.L. LISTED - FILE NUMBER E157099
-ALL ELECTRICAL WORK SHALL BE PERFORMED IN ACCORDANCE WITH "NEC" REF. SECTION 600
-ALL ELECTRICAL SIGN SECTIONS TO HAVE U.L. LABEL IN ACCORDANCE WITH "NEC" 600.3 AND MANUFACTURERS LABEL LOCATED NEXT TO DISCONNECT SWITCH
-ALL NON-CURRENT CARRYING METAL PARTS OF SIGN SHALL BE GROUNDED & BONDED IN ACCORDANCE WITH "NEC" 250
-ALL WIRING CONTAINED IN ENCLOSED AREAS WITH LAMPS SHALL BE FIXTURE RATED
-SPLICING OF CONDUCTORS SHALL BE MADE IN JUNCTION BOXES OR SIMILAR METAL ENCLOSURES
-AT THE POINT THAT ELECTRICAL CABLE PASSES THRU THE SIGN BOX, IT SHALL PASS THRU A U.L. LISTED RUBBER GROMMET

ESTIMATED SIGN WEIGHT
-16 lbs. PER LETTER
-32 lbs. PER LOGO

146 MPH WIND LOAD
IMPORTANCE FACTOR 1.0
EXPOSURE C
2007 FLORIDA BUILDING CODE
2009 SUPPLEMENT
SECTION 16 WIND LOAD
ASCE 7-05

ENCON SERVICES, INC.
AARON BIEDENBACH
2272 JAUDON ROAD
DOVER, FL 33527
813-655-3373
FLPE #52949, FLEB #9394

5/12/15

CHANNEL LETTERS (BLACK LTRS / BLUE OCTAGON) LIF-BLK-24-s - ELEVATION - (3) REQ'D
SCALE: 1/2" = 1' 0"

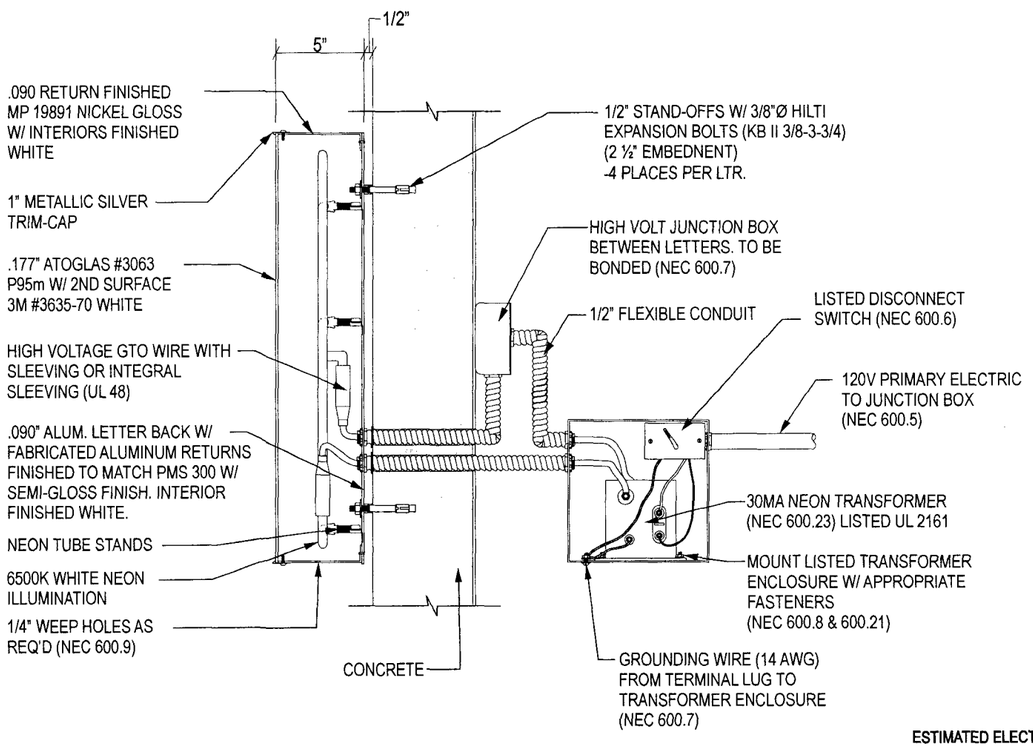

SECTION DETAIL A-A
SCALE: 1 1/2" = 1'-0"

ESTIMATED ELECTRICAL LOAD
6.3A @ 120VAC
ESTIMATED ELECTRICAL REQUIREMENTS
(1)20A circuit @ 120VAC

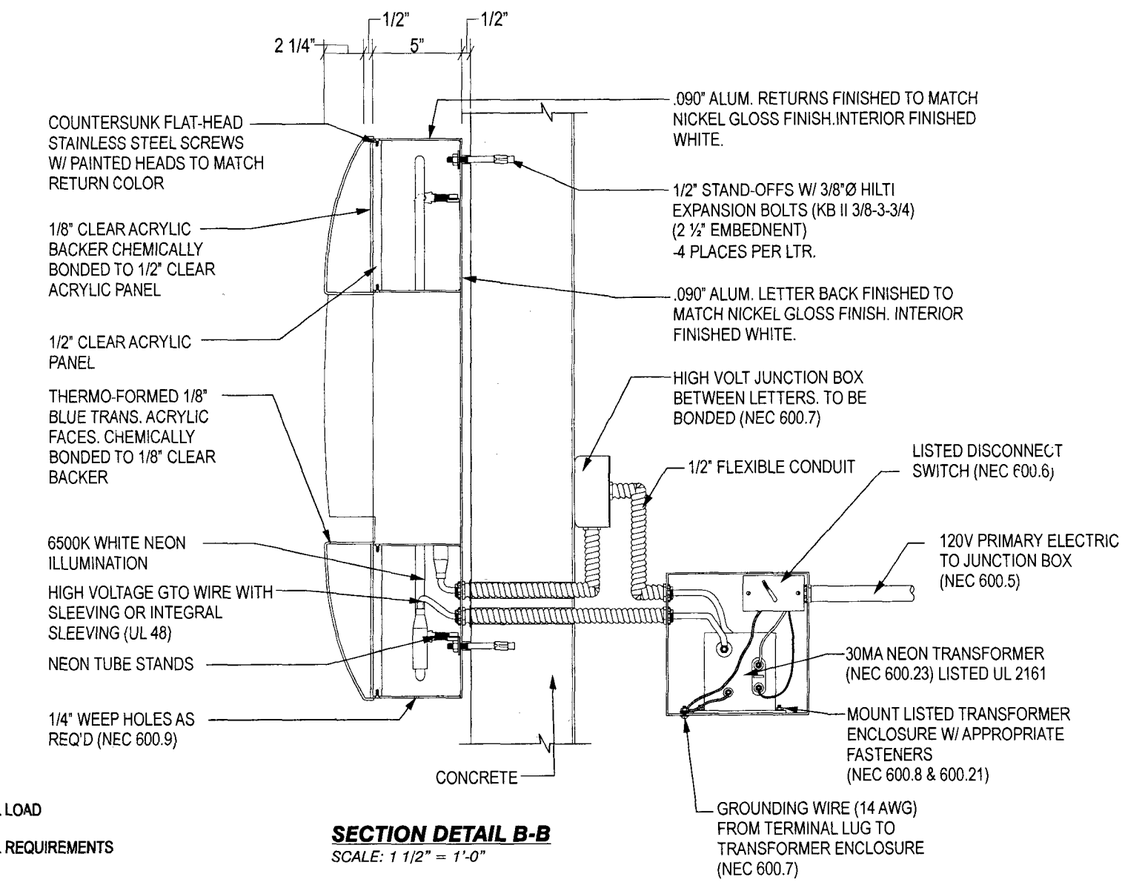

SECTION DETAIL B-B
SCALE: 1 1/2" = 1'-0"

CHASE | 940 IVES DAIRY RD, MIAMI FL | W1758 | 08-2169-5

CORPORATE OFFICE: 360 CRIDER AVENUE MOORESTOWN, NJ 08057 P - 856.802.1677 F - 856.802.0412
FLORIDA 2416 SAND LAKE ROAD ORLANDO, FL 32809 - TEXAS SERVICE CENTER 460 SOUTH BELTLINE ROAD SUITE 422 IRVING, TX 75060 - NORTH CAROLINA 120 CASCADE DRIVE CONCORD, NC 28027 - TEXAS 7303 BURLESON ROAD, SUITE 706 AUSTIN, TX 78744

THIS IS AN ORIGINAL UNPUBLISHED DRAWING CREATED BY NW SIGN INDUSTRIES, INC. IT IS PROVIDED FOR THE EXCLUSIVE USE BY THE CUSTOMER AND FOR THE PROJECT NAMED IN THIS TITLE BLOCK. IT SHALL NOT BE PROVIDED TO ANY OTHER SIGN MANUFACTURER OR USED FOR ANY OTHER PROJECT WITHOUT THE WRITTEN PERMISSION OF NW SIGN INDUSTRIES, INC. THIS DRAWING IS AN INSTRUMENT OF SERVICE AND SHALL REMAIN THE EXCLUSIVE PROPERTY OF NW SIGN INDUSTRIES, INC. ©NW SIGN INDUSTRIES, INC. 2008

EnCon Services, Inc.

Sign Design Calculations

Job Description
Chase Bank 1758
940 Ives Dairy Road
Miami, FL
2'-0" letterset
Design per 2007 Florida Building Code, 2009 supplement, Section 16 Wind Load
ASCE 7-05

PREPARED BY: EnCon Services, Inc.
2272 Jaudon Road
Dover, FL 33527
813-655-3373
F 813-655-9814

Aaron Biedenbach, P.E.
FL PE #52949, FL EB 9394
OH PE 60756, OC #01893
KY PE #20281, P #2463
IN PE #PE 19600322
FL CBC #060535, QB #22527

Design Specifications		
Importance Factor	1	
Kzt	1	
Exposure Factor	C	
Kd	1	
Kz	0.98	
V	146	mph
GCp-GCpi	1.28	Zone 4, h < 60
Wind Pressure	68.5	(psf)

Sign Information per Letter		
Height	2.00	(ft)
Width	2.00	(ft)
Thickness	1.00	(ft)
Distance grade to top	30	(ft)

Wind Sheer Force 136.90 (lb)
Weight of Sign 32 (lb)

Total Sheer Force = 140.59 (lb)

Total Tension Force = 273.81 (lb)

5/12/9

	Required	Provided
Fastener size (Nominal)	3/8	3/8
Minimum number of fasteners per letter	4	4
Sheer Force per fastener (lb)	35.1	280
Tension Force per fastener (lb)	68.5	352

Combination Tension and Sheer ratio **0.32 <1 O.K.**

WALL STRUCTURE	ANCHOR TYPE
SOLID CONCRETE	HILTI KBII EXPANSION ANCHOR (2-1/2" EMBEDMENT)

ALL ANCHORS SHALL BE CHOSEN AND PLACED IN ACCORDANCE WITH MANUFACTURERS INSTALLATION INSTRUCTIONS

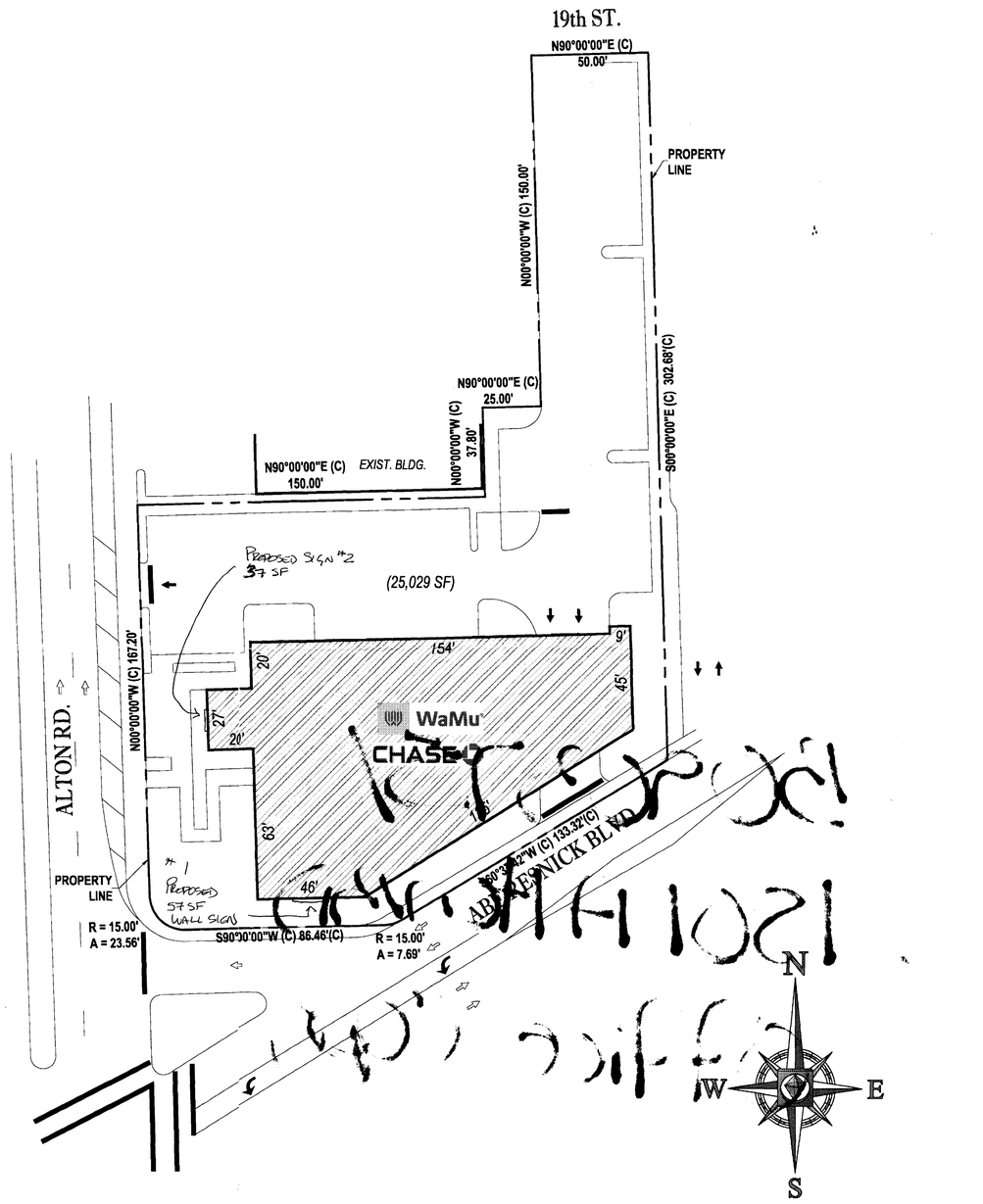

GRAPHIC SCALE

30 0 15 30 60 120

(IN FEET)
1 INCH = 30 FT

SOUTHERN VIEW OF SITE

NOT TO SCALE

WAMU BUILDING ID #1924
1801 ALTON RD.
MIAMI BEACH, FL 33139

LEGAL DESCRIPTION:
A PORTION OF:
THE EAST 50 FEET OF LOT 6, LOT 10, LESS THE NORTH 2.8 FEET THEREOF, AND LOT 11, IN BLOCK 11 OF "ISLAND VIEW SUBDIVISION", ACCORDING TO THE PLAT THEREOF, AS RECORDED IN PLAT BOOK 6, AT PAGE 115 OF THE PUBLIC RECORDS OF MIAMI-DADE COUNTY, FLORIDA.

NOTES:

1. THIS PLAN WAS PREPARED BASED ON A SPECIFIC PURPOSE SURVEY PREPARED BY PINNELL SURVEY, INC.

2. NO FREESTANDING SIGN LOCATED ON BANK PARCEL.

BOHLER ID #54

BOHLER ENGINEERING

CIVIL & CONSULTING ENGINEERS
SURVEYORS
PROJECT MANAGERS
ENVIRONMENTAL CONSULTANTS
LANDSCAPE ARCHITECTS

CORPORATE OFFICE:
◆ WARREN, NJ

OFFICES:
◆ SOUTHBOROUGH, MA ◆ BOWIE, MD
◆ ALBANY, NY ◆ TOMS RIVER, NJ
◆ PITTSFIELD, MA ◆ STERLING, VA
◆ PORCHOMOMA, NY ◆ WARRENTON, VA
◆ CHARLOTTE, NC ◆ WEST LAUDERDALE, FL
◆ CENTER VALLEY, PA

REVISIONS:

REV:	DATE:	COMMENT:	BY:

NOT APPROVED FOR CONSTRUCTION

PROJECT No.:	
DRAWN BY:	CAD
CHECKED BY:	JMG
DATE:	12/30/08
SCALE:	AS NOTED
CAD I.D.:	SIGN-EXHIBIT-54

PROJECT:

MIAMI BEACH/ ALTON ROAD LOCATION

FOR

WAMU BANK

#1924

1801 ALTON RD.
CITY OF MIAMI BEACH
MIAMI-DADE COUNTY
FLORIDA

BOHLER ENGINEERING

RADICE III
1000 CORPORATE DRIVE, SUITE 250
FORT LAUDERDALE, FL 33334
PH: (954) 202-7000
FX: (954) 202-7070
www.BohlerEngineering.com

JASON M. GUNTHER
PROFESSIONAL ENGINEER
February 6, 2009
FLORIDA LICENSE No. 58629
FLORIDA BUSINESS CERT. OF AUTH. No. 27528

SHEET TITLE:

SIGN EXHIBIT

SHEET NUMBER:

1
OF 1

Printed on Friday, February 06, 2009, 8:51 AM by Cesar DeLeSantos
C:\CHASE-WAMU REMARKS\MIAMI-DADE COUNTY\34-1924-MIAMI BEACH-ALTON ROAD\SIGN-EXHIBIT-54-------XLYOUT: #1924

B090375/
1801 Alton Rd
Office Copy

OFFICE COPY
CITY OF MIAMI BEACH
APPROVED FOR PERMIT BY
THE FOLLOWING:
BUILDING:
ZONING: 9/23/09
DERB/HPB:
CONCURRENCY:
PLUMBING:
ELECTRICAL: 9/23/09
MECHANICAL:
FIRE PREVENTION:
ENGINEERING:
PUBLIC WORKS:
STRUCTURAL: Perez 9/17/09 / Lopez 9/22/09
ELEVATOR:

EnCon Services, Inc.

Sign Design Calculations

Job Description
Chase Bank 1742
1801 Alton Rd.
Miami Beach, Florida
2'-6" Chase Letterset
Design per 2007 Florida Building Code, 2009 supplement, Section 16 Wind Load
ASCE 7-05

PREPARED BY: EnCon Services, Inc.
2272 Jaudon Road
Dover, FL 33527
813-655-3373
F 813-655-9814

Aaron Biedenbach, P.E.
FL PE #52949, FL EB 9394
OH PE 60756, OC #01893
KY PE #20281, P #2463
IN PE #PE 19600322
FL CBC #060535, QB #22527

Design Specifications	
Importance Factor	1
Kzt	1
Exposure Factor	C
Kd	1
Kz	1.04
V	146 (mph)
GCp-GCpi	1.28 Zone 4, H < 60 Feet
Wind Pressure	72.6 (psf)

Sign Information Per Letter		
Height	2.50	(ft)
Width	2.50	(ft)
Thickness	1.00	(ft)
Distance grade to top	40	(ft)

Wind Sheer Force 181.61 (lb)
Weight of Sign 62.5 (lb)

Total Sheer Force = 192.06 (lb)

Total Tension Force = 454.01 (lb)

	Required	Provided
Fastener size (Nominal)	3/8	3/8
Minimum number of fasteners Per letter	4	4
Sheer Force per fastener (lb)	48.0	280
Tension Force per fastener (lb)	113.5	352

Combination Tension and Sheer ratio **0.49 <1 O.K.**

THREADED ROD THROUGH WALL IS PREFERRED IN ALL INSTANCES. IF IT IS NOT POSSIBLE TO USE THREADED ROD, SEE CHART BELOW FOR APPROPRIATE ANCHOR SELECTION. SIZE AND NUMBER REQUIRED ARE NOTED IN THE CHART ABOVE.

WALL STRUCTURE	ANCHOR TYPE
SOLID CONCRETE	HILTI KWIK BOLT 3 EXPANSION ANCHOR (2-1/2" EMBEDMENT)

ALL ANCHORS SHALL BE CHOSEN AND PLACED IN ACCORDANCE WITH MANUFACTURERS INSTALLATION INSTRUCTIONS

6/18/9

EnCon Services, Inc.

Sign Design Calculations

Job Description
Chase Bank 1758
940 Ives Dairy Road
Miami, FL
2'-0" letterset
Design per 2007 Florida Building Code, 2009 supplement, Section 16 Wind Load
ASCE 7-05

PREPARED BY: EnCon Services, Inc.
2272 Jaudon Road
Dover, FL 33527
813-655-3373
F 813-655-9814

Aaron Biedenbach, P.E.
FL PE #52949, FL EB 9394
OH PE 60756, OC #01893
KY PE #20281, P #2463
IN PE #PE 19600322
FL CBC #060535, QB #22527

Design Specifications		
Importance Factor	1	
Kzt	1	
Exposure Factor	C	
Kd	1	
Kz	0.98	
V	146	mph
GCp-GCpi	1.28	Zone 4, h < 60
Wind Pressure	68.5	(psf)

Sign Information per Letter		
Height	2.00	(ft)
Width	2.00	(ft)
Thickness	1.00	(ft)
Distance grade to top	30	(ft)

Wind Sheer Force 136.90 (lb)
Weight of Sign 32 (lb)

Total Sheer Force = 140.59 (lb)

Total Tension Force = 273.81 (lb)

5/12/09

	Required	Provided
Fastener size (Nominal)	3/8	3/8
Minimum number of fasteners per letter	4	4
Sheer Force per fastener (lb)	35.1	280
Tension Force per fastener (lb)	68.5	352

Combination Tension and Sheer ratio **0.32 <1 O.K.**

WALL STRUCTURE	ANCHOR TYPE
SOLID CONCRETE	HILTI KBII EXPANSION ANCHOR (2-1/2" EMBEDMENT)

ALL ANCHORS SHALL BE CHOSEN AND PLACED IN ACCORDANCE WITH MANUFACTURERS INSTALLATION INSTRUCTIONS

NW SIGN INDUSTRIES
IDENTIFY WITH QUALITY

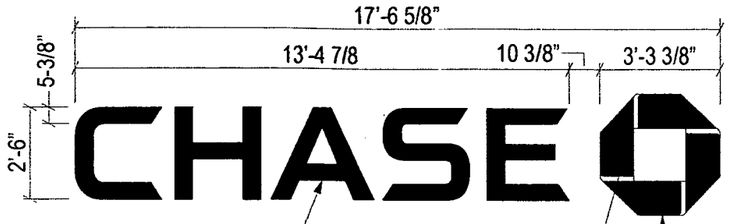

LETTER FACE TO BE .177 ATOGLASS #3063 P95M W/ MATTE FACE OUT. SECOND SURFACE DECORATE WITH 3M FILM 3635-70 WHITE DIFFUSER

THERMO-FORMED 1/8" ARISTECH #6046 BLUE TRANS. ACRYLIC FACES.

WEEP HOLES (AS REQ'D)

CHANNEL LETTERS - LIF-BLK-30
SCALE: ¼" = 1' 0"

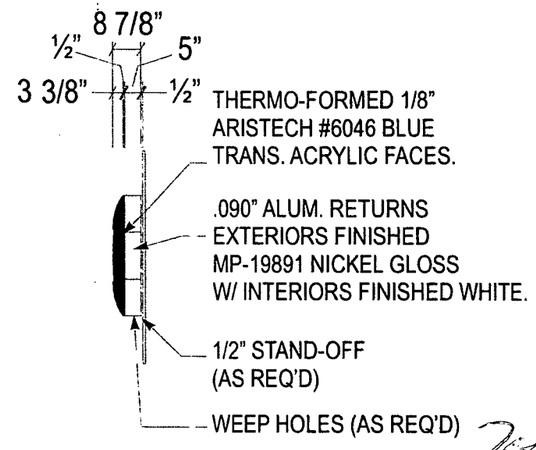

OCTAGON - SIDE VIEW
SCALE: ¼" = 1' 0"

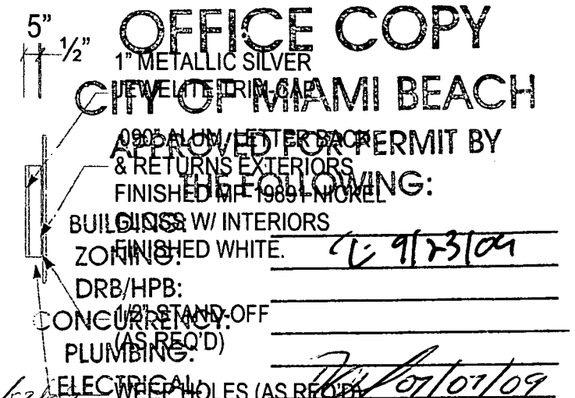

LETTER - SIDE VIEW
SCALE: ¼" = 1' 0"

OFFICE COPY
CITY OF MIAMI BEACH
APPROVED FOR PERMIT BY THE FOLLOWING:
BUILDING:
ZONING: 9/23/09
DRB/HPB:
CONCURRENCY:
PLUMBING:
ELECTRICAL: 07/07/09
MECHANICAL:
FIRE PREVENTION:
ENGINEERING:
PUBLIC WORKS:
STRUCTURAL: 7/7/09
ELEVATOR:

REMOVE-RESTORE - REMOVE AND RESTORE
SCALE: NTS

181'

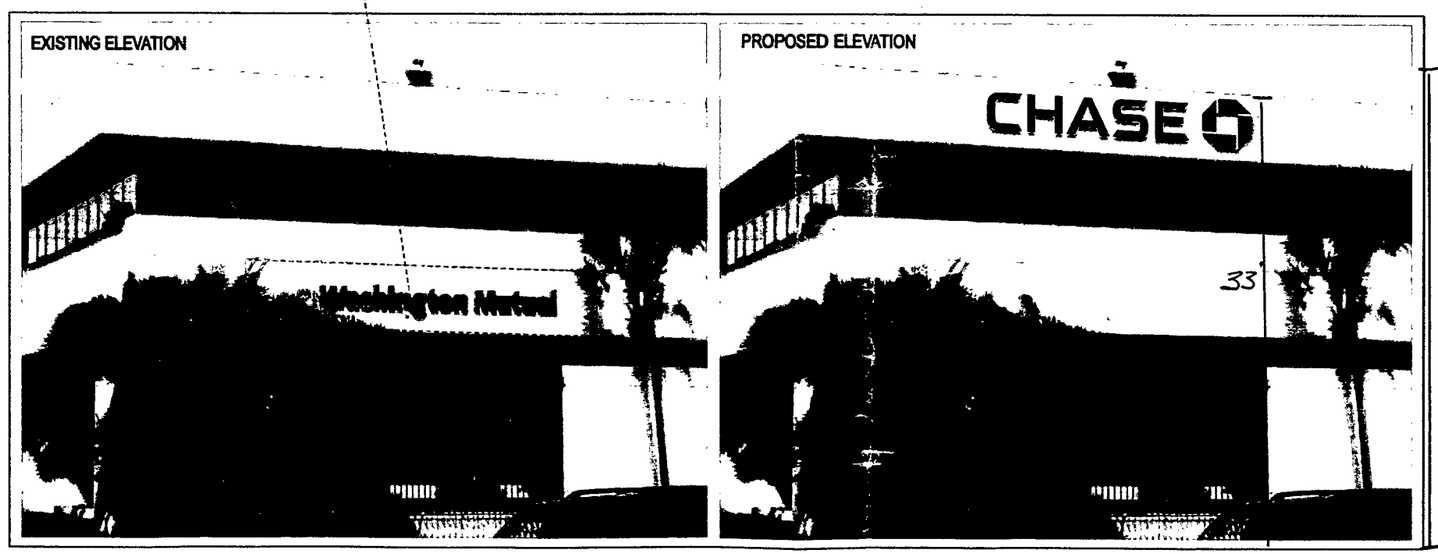

36'

SIGN #1
WALL HEIGHT: 36'
WALL LENGTH: 181'
PROPOSED SIGN: 57 SF
36' WALL AREA: 6516

SOUTH ELEVATION - LIF-BLK-30
Scale: NTS

CLIENT NAME	ADDRESS	SITE	PAGE NUMBER	DRAWING NUMBER
CHASE	1801 Alton Road - Miami Beach, FL 33139	W1742	6	08-2167-9

CORPORATE OFFICE: 360 CRIDER AVENUE MOORESTOWN, NJ 08057 P - 856.802.1677 F - 856.802.0412
FLORIDA 2416 SAND LAKE ROAD ORLANDO, FL 32809 - TEXAS SERVICE CENTER 460 SOUTH BELTLINE ROAD SUITE 422 IRVING, TX 75060 - NORTH CAROLINA 120 CASCADE DRIVE CONCORD, NC 28027 - TEXAS 7303 BURLESON ROAD, SUITE 706 AUSTIN, TX 78744

THIS IS AN ORIGINAL UNPUBLISHED DRAWING CREATED BY NW SIGN INDUSTRIES, INC. IT IS PROVIDED FOR THE EXCLUSIVE USE BY THE CUSTOMER AND FOR THE PROJECT NAMED IN THIS TITLE BLOCK. IT SHALL NOT BE PROVIDED TO ANY OTHER SIGN MANUFACTURER OR USED FOR ANY OTHER PROJECT WITHOUT THE WRITTEN PERMISSION OF NW SIGN INDUSTRIES, INC. THIS DRAWING IS AN INSTRUMENT OF SERVICE AND SHALL REMAIN THE EXCLUSIVE PROPERTY OF NW SIGN INDUSTRIES, INC. ©NW SIGN INDUSTRIES, INC. 2008

NW SIGN INDUSTRIES
IDENTIFY WITH QUALITY

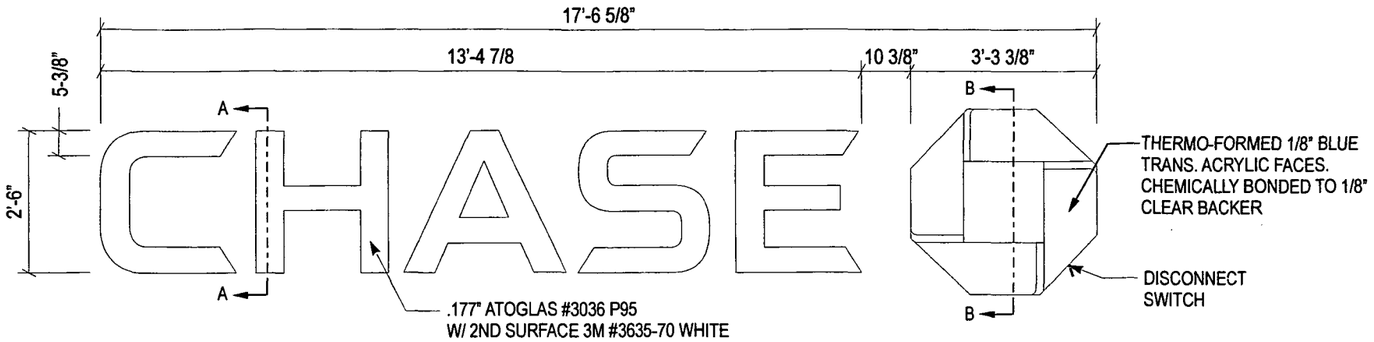

CHANNEL LETTERS (BLACK LTRS / BLUE OCTAGON) LIF-BLK-30-s (2) REQ'D

SCALE: 3/8" = 1' 0"

GENERAL NOTES:

-U.L. LISTED - FILE NUMBER E157099
-ALL ELECTRICAL WORK SHALL BE PERFORMED IN ACCORDANCE WITH "NEC" REF. SECTION 600
-ALL ELECTRICAL SIGN SECTIONS TO HAVE U.L. LABEL IN ACCORDANCE WITH "NEC" 600.3 AND MANUFACTURERS LABEL LOCATED NEXT TO DISCONNECT SWITCH
-ALL NON-CURRENT CARRYING METAL PARTS OF SIGN SHALL BE GROUNDED & BONDED IN ACCORDANCE WITH "NEC" 250
-ALL WIRING CONTAINED IN ENCLOSED AREAS WITH LAMPS SHALL BE FIXTURE RATED
-SPLICING OF CONDUCTORS SHALL BE MADE IN JUNCTION BOXES OR SIMILAR METAL ENCLOSURES
-AT THE POINT THAT ELECTRICAL CABLE PASSES THRU THE SIGN BOX, IT SHALL PASS THRU A U.L. LISTED RUBBER GROMMET

146 MPH WIND LOAD
IMPORTANCE FACTOR 1.0
EXPOSURE C
2007 FLORIDA BUILDING CODE
2009 SUPPLEMENT
SECTION 16 WIND LOAD
ASCE 7-05

ENCON SERVICES, INC.
AARON BIEDENBACH
2272 JAUDON ROAD
DOVER, FL 33527
813-655-3373
FLPE #52949, FLEB #9394

SIGN MOUNTING HEIGHT TO BE 40FT MAXIMUM

ESTIMATED SIGN WEIGHT
-28 lbs. PER LETTER
-52 lbs. PER LOGO

6/18/9

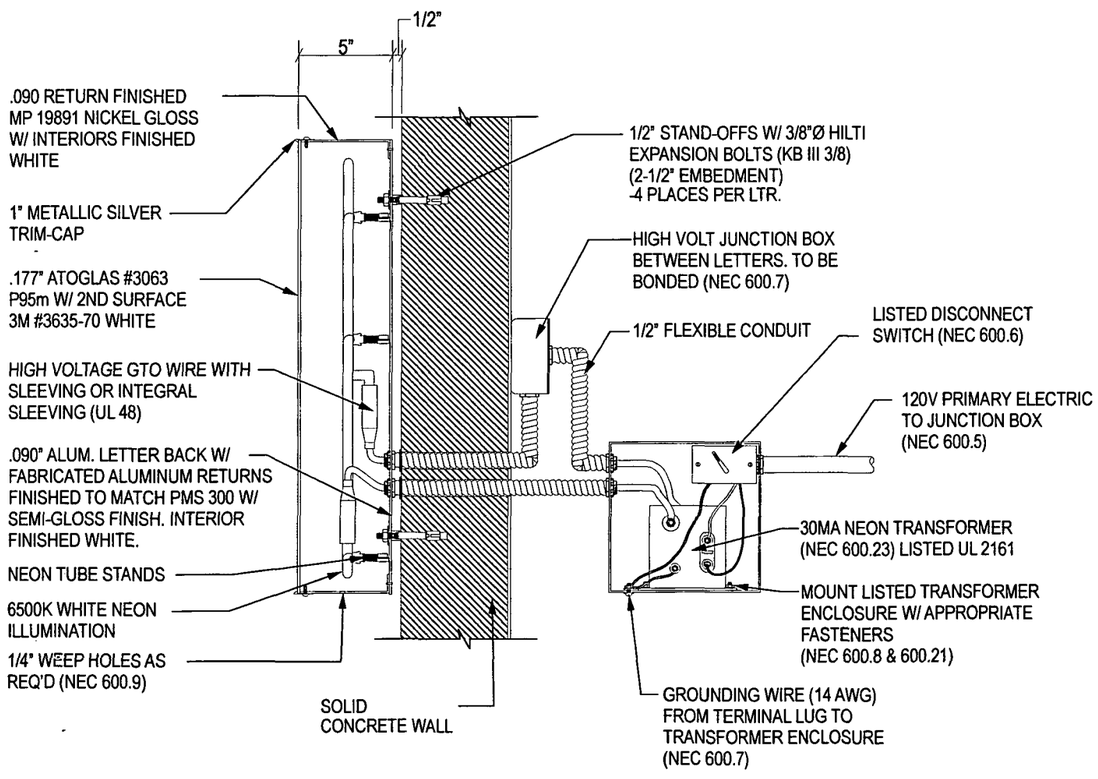

SECTION DETAIL A-A

SCALE: 1 1/2" = 1'-0"

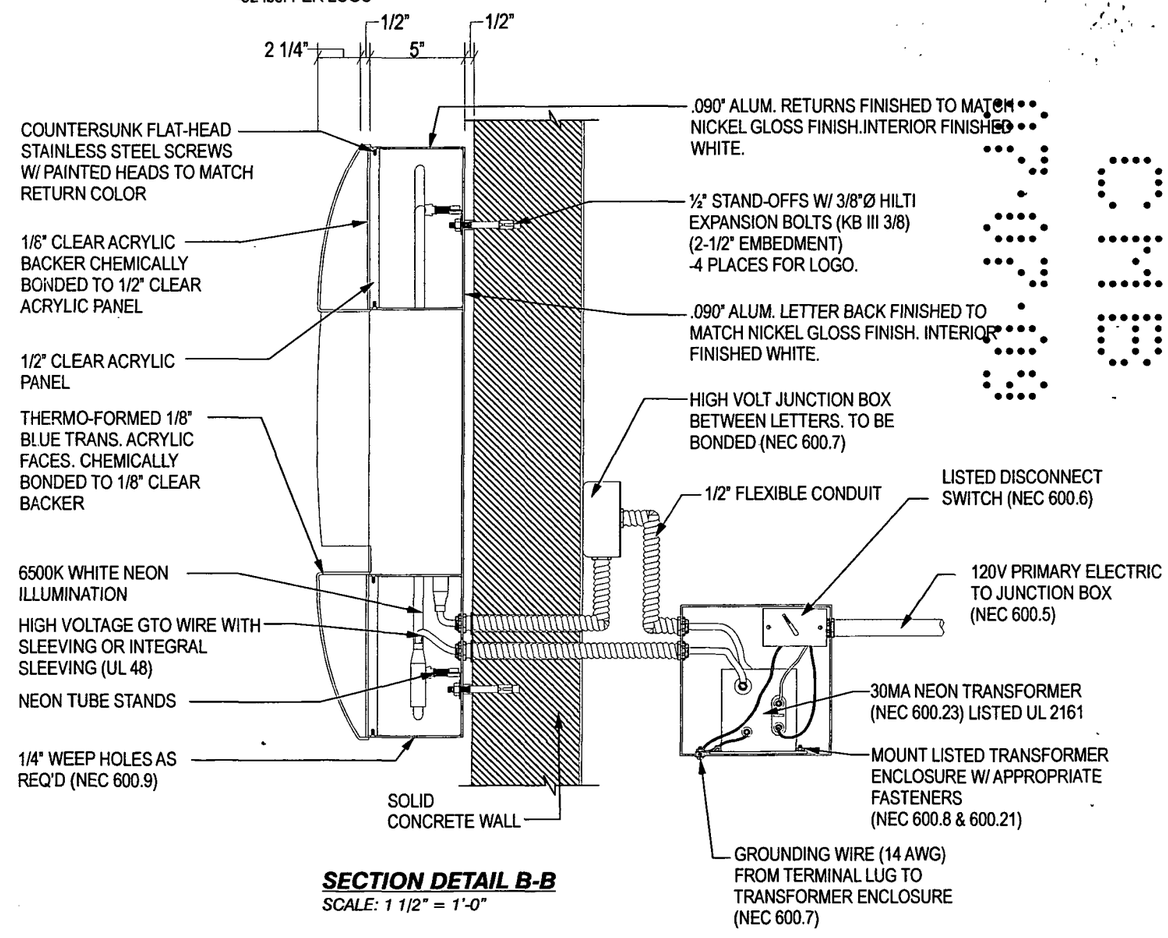

SECTION DETAIL B-B

SCALE: 1 1/2" = 1'-0"

CHASE | 1801 Alton Road - Miami Beach, FL 33139 | W1742 | 08-2167-8

THIS IS AN ORIGINAL UNPUBLISHED DRAWING CREATED BY NW SIGN INDUSTRIES, INC. IT IS PROVIDED FOR THE EXCLUSIVE USE BY THE CUSTOMER AND FOR THE PROJECT NAMED IN THIS TITLE BLOCK. IT SHALL NOT BE PROVIDED TO ANY OTHER SIGN MANUFACTURER OR USED FOR ANY OTHER PROJECT WITHOUT THE WRITTEN PERMISSION OF NW SIGN INDUSTRIES, INC. THIS DRAWING IS AN INSTRUMENT OF SERVICE AND SHALL REMAIN THE EXCLUSIVE PROPERTY OF NW SIGN INDUSTRIES, INC. ©NW SIGN INDUSTRIES, INC. 2008

NW SIGN INDUSTRIES
IDENTIFY WITH QUALITY

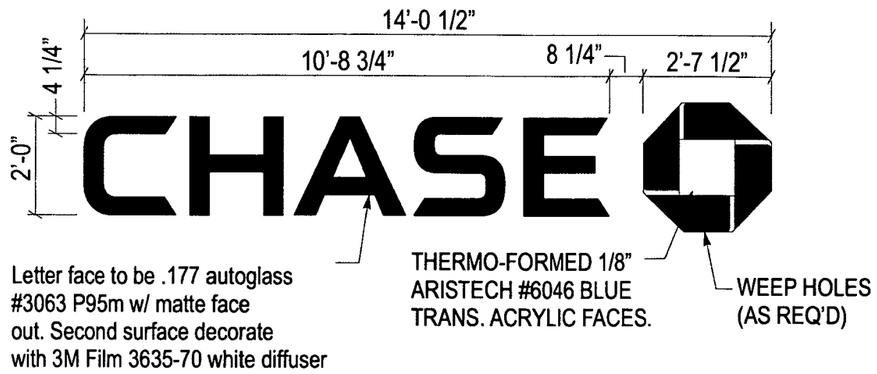

2 CHANNEL LETTERS LIF-BLK-24-s - ELEVATION
SCALE: 1/4" = 1' 0"

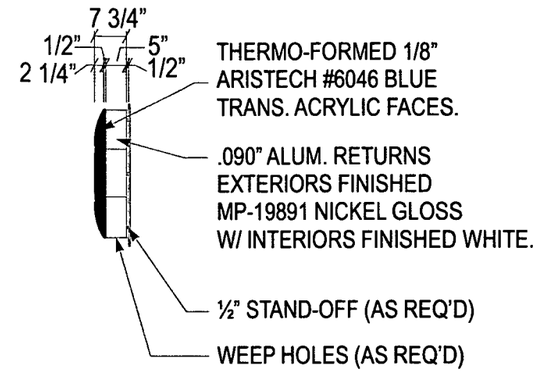

OCTAGON - SIDE VIEW
SCALE: 1/4" = 1' 0"

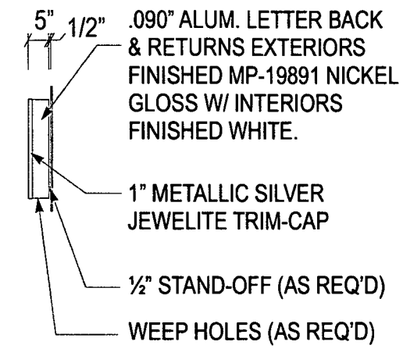

LETTER - SIDE VIEW
SCALE: 1/4" = 1' 0"

16 REMOVE-RESTORE - REMOVE AND RESTORE
SCALE: NTS

110'

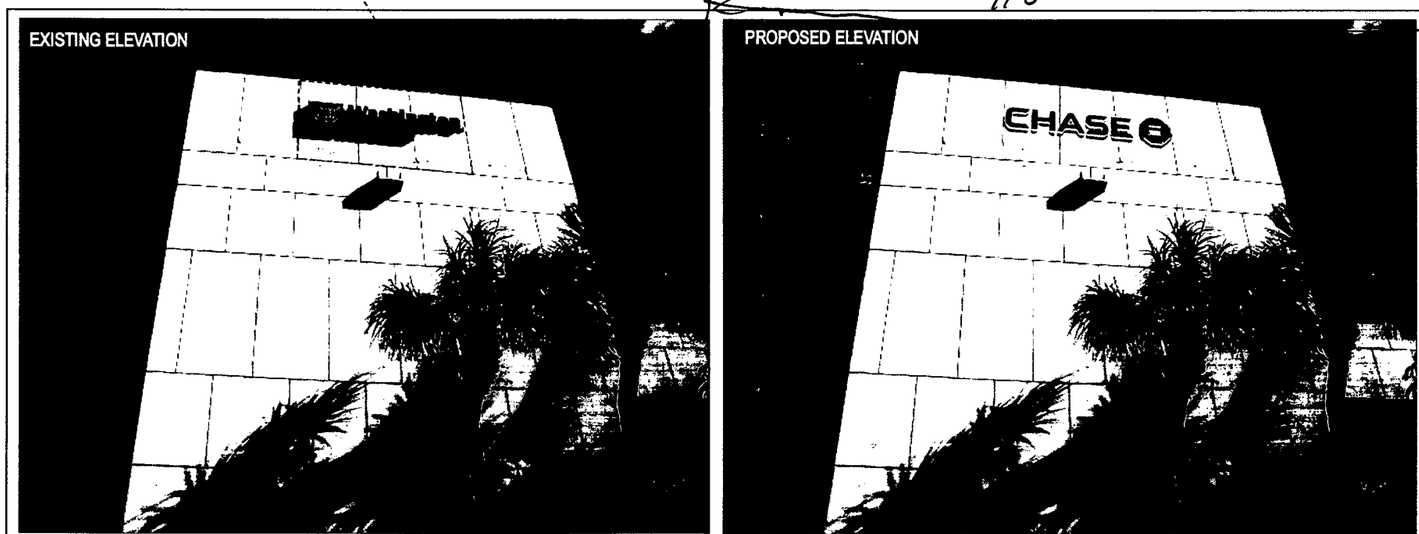

WEST ELEVATION - LIF-BLK-30
Scale: NTS

SIGN #2
WALL HEIGHT: 36'
WALL LENGTH: 110'
WALL AREA: 3960 sf.
Proposed Sign Area: 37 sf

CLIENT NAME	ADDRESS	SITE	PAGE NUMBER	DRAWING NUMBER
CHASE	1801 Alton Road - Miami Beach, FL 33139	W1742	5	08-2167-12

CORPORATE OFFICE: 360 CRIDER AVENUE MOORESTOWN, NJ 08057 P - 856.802.1677 F - 856.802.0412
FLORIDA 2416 SAND LAKE ROAD ORLANDO, FL 32809 - TEXAS SERVICE CENTER 460 SOUTH BELTLINE ROAD SUITE 422 IRVING, TX 75060 - NORTH CAROLINA 120 CASCADE DRIVE CONCORD, NC 28027 - TEXAS 7303 BURLESON ROAD, SUITE 706 AUSTIN, TX 78744

THIS IS AN ORIGINAL UNPUBLISHED DRAWING CREATED BY NW SIGN INDUSTRIES, INC. IT IS PROVIDED FOR THE EXCLUSIVE USE BY THE CUSTOMER AND FOR THE PROJECT NAMED IN THIS TITLE BLOCK. IT SHALL NOT BE PROVIDED TO ANY OTHER SIGN MANUFACTURER OR USED FOR ANY OTHER PROJECT WITHOUT THE WRITTEN PERMISSION OF NW SIGN INDUSTRIES, INC. THIS DRAWING IS AN INSTRUMENT OF SERVICE AND SHALL REMAIN THE EXCLUSIVE PROPERTY OF NW SIGN INDUSTRIES, INC. ©NW SIGN INDUSTRIES, INC. 2008

NW SIGN INDUSTRIES
IDENTIFY WITH QUALITY

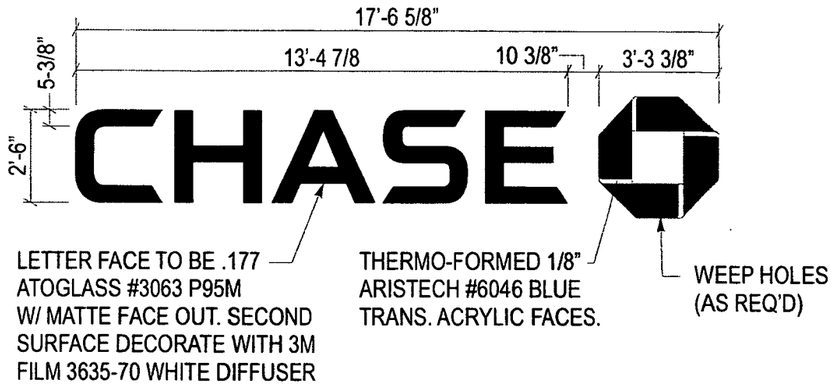

2 CHANNEL LETTERS- LIF-BLK-30-s - ELEVATION
SCALE: ¼" = 1' 0"

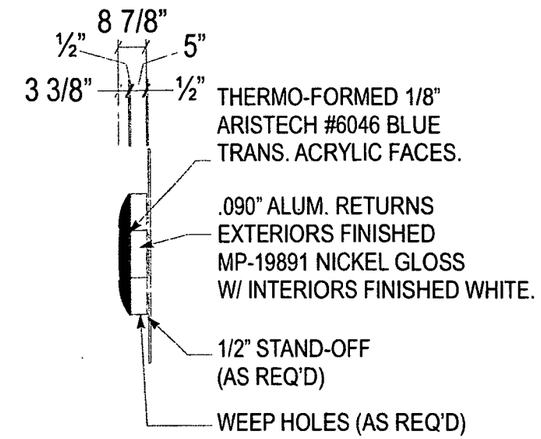

OCTAGON - SIDE VIEW
SCALE: ¼" = 1' 0"

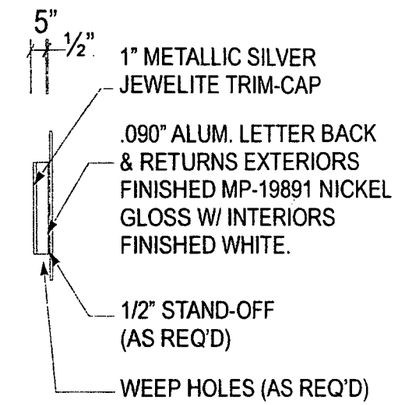

LETTER - SIDE VIEW
SCALE: ¼" = 1' 0"

16 REMOVE-RESTORE - REMOVE AND RESTORE
SCALE: NTS

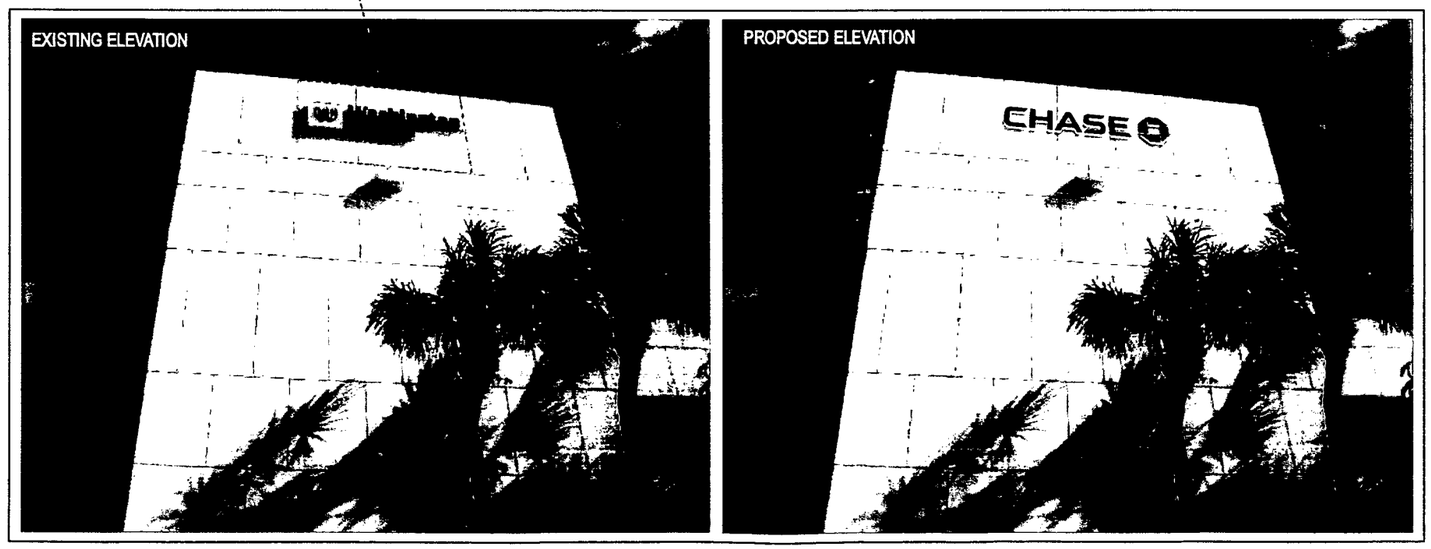

WEST ELEVATION - LIF-BLK-30
Scale: NTS

SIGN 2

WALL HEIGH: 36
WALL LENGTH: 110'
PROPOSED SIGN: 57 SF

CLIENT NAME	ADDRESS	SITE	PAGE NUMBER	DRAWING NUMBER
CHASE	1801 Alton Road - Miami Beach, FL 33139	W1742	5	08-2167-9

CORPORATE OFFICE: 360 CRIDER AVENUE MOORESTOWN, NJ 08057 P - 856.802.1677 F - 856.802.0412
FLORIDA 2416 SAND LAKE ROAD ORLANDO, FL 32809 - TEXAS SERVICE CENTER 460 SOUTH BELTLINE ROAD SUITE 422 IRVING, TX 75060 - NORTH CAROLINA 120 CASCADE DRIVE CONCORD, NC 28027 - TEXAS 7303 BURLESON ROAD, SUITE 706 AUSTIN, TX 78744

THIS IS AN ORIGINAL UNPUBLISHED DRAWING CREATED BY NW SIGN INDUSTRIES, INC. IT IS PROVIDED FOR THE EXCLUSIVE USE BY THE CUSTOMER AND FOR THE PROJECT NAMED IN THIS TITLE BLOCK. IT SHALL NOT BE PROVIDED TO ANY OTHER SIGN MANUFACTURER OR USED FOR ANY OTHER PROJECT WITHOUT THE WRITTEN PERMISSION OF NW SIGN INDUSTRIES, INC. THIS DRAWING IS AN INSTRUMENT OF SERVICE AND SHALL REMAIN THE EXCLUSIVE PROPERTY OF NW SIGN INDUSTRIES, INC. ©NW SIGN INDUSTRIES, INC. 2008

CITY OF MIAMI BEACH
VOID

NW SIGN INDUSTRIES
IDENTIFY WITH QUALITY

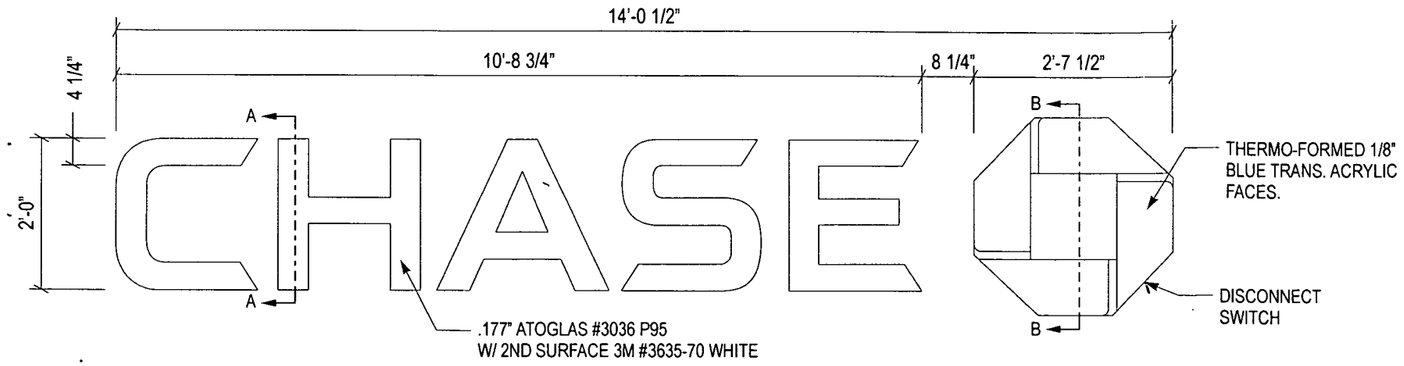

CHANNEL LETTERS (BLACK LTRS / BLUE OCTAGON) LIF-BLK-24-s - ELEVATION - (3) REQ'D
SCALE: 1/2" = 1' 0"

GENERAL NOTES:

-U.L. LISTED - FILE NUMBER E157099
-ALL ELECTRICAL WORK SHALL BE PERFORMED IN ACCORDANCE WITH "NEC" REF. SECTION 600
-ALL ELECTRICAL SIGN SECTIONS TO HAVE U.L. LABEL IN ACCORDANCE WITH "NEC" 600.3 AND MANUFACTURERS LABEL LOCATED NEXT TO DISCONNECT SWITCH
-ALL NON-CURRENT CARRYING METAL PARTS OF SIGN SHALL BE GROUNDED & BONDED IN ACCORDANCE WITH "NEC" 250
-ALL WIRING CONTAINED IN ENCLOSED AREAS WITH LAMPS SHALL BE FIXTURE RATED
-SPLICING OF CONDUCTORS SHALL BE MADE IN JUNCTION BOXES OR SIMILAR METAL ENCLOSURES
-AT THE POINT THAT ELECTRICAL CABLE PASSES THRU THE SIGN BOX, IT SHALL PASS THRU A U.L. LISTED RUBBER GROMMET

ESTIMATED SIGN WEIGHT
-16 lbs. PER LETTER
-32 lbs. PER LOGO

146 MPH WIND LOAD
IMPORTANCE FACTOR 1.0
EXPOSURE C
2007 FLORIDA BUILDING CODE
2009 SUPPLEMENT
SECTION 16 WIND LOAD
ASCE 7-05

ENCON SERVICES, INC.
AARON BIEDENBACH
2272 JAUDON ROAD
DOVER, FL 33527
813-655-3373
FLPE #52949, FLEB #9394

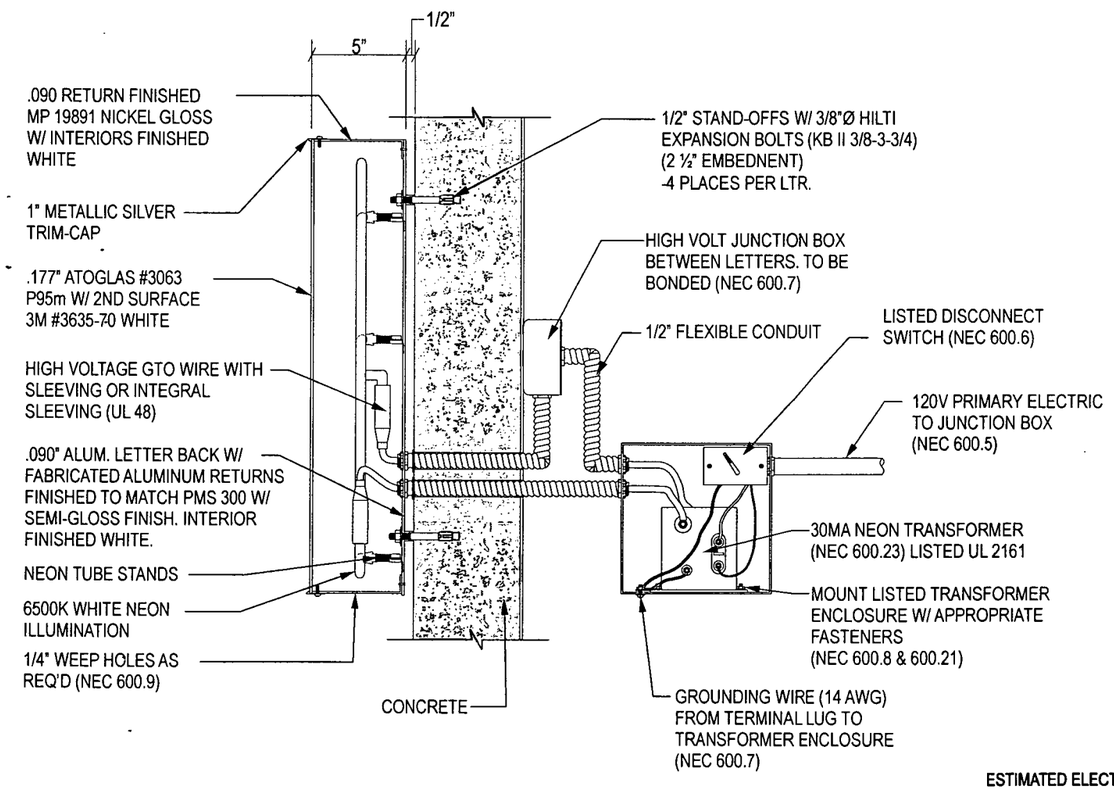

SECTION DETAIL A-A
SCALE: 1 1/2" = 1'-0"

ESTIMATED ELECTRICAL LOAD
6.3A @ 120VAC
ESTIMATED ELECTRICAL REQUIREMENTS
(1)20A circuit @ 120VAC

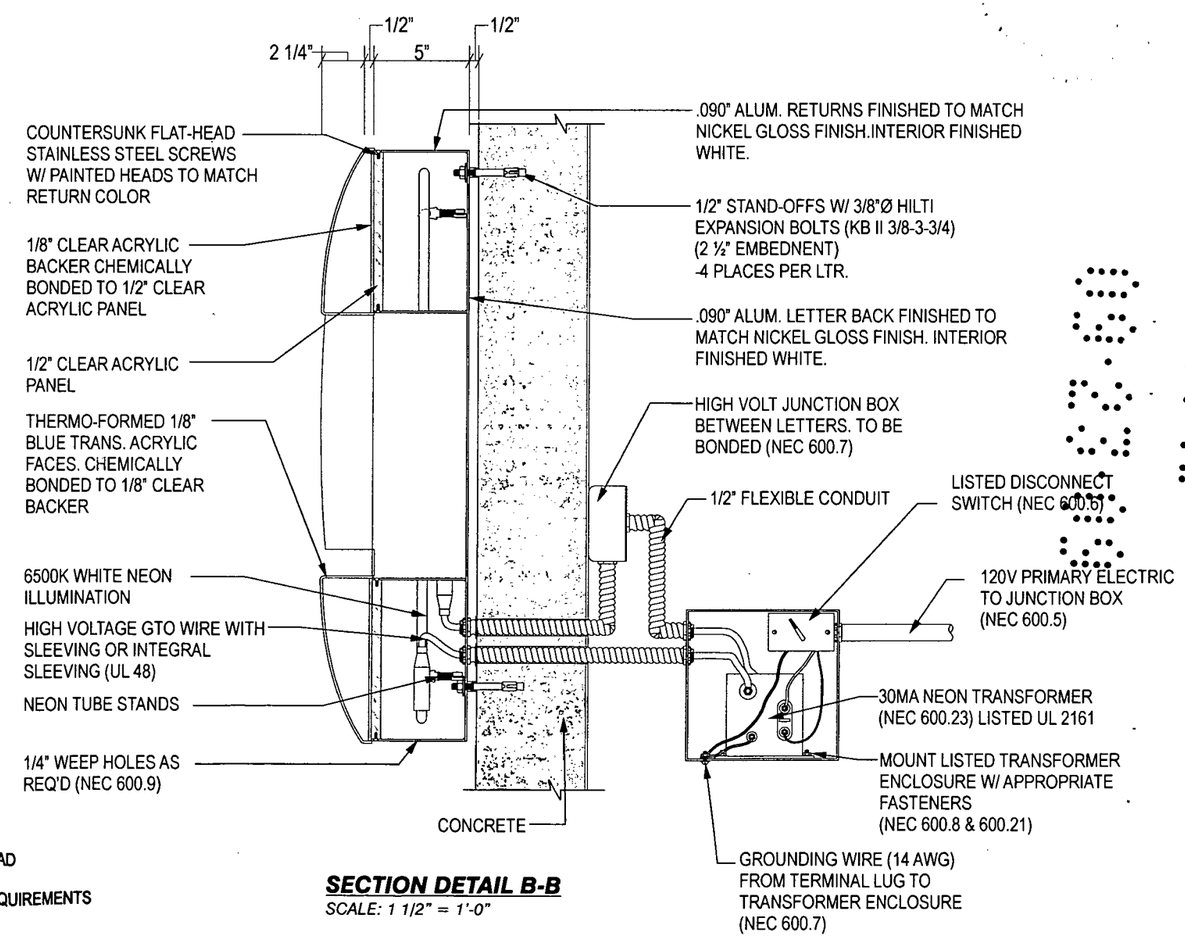

SECTION DETAIL B-B
SCALE: 1 1/2" = 1'-0"

CLIENT NAME	ADDRESS	SITE	DRAWING NUMBER
CHASE	940 IVES DAIRY RD, MIAMI FL	W1758	08-2169-5

THIS IS AN ORIGINAL UNPUBLISHED DRAWING CREATED BY NW SIGN INDUSTRIES, INC. IT IS PROVIDED FOR THE EXCLUSIVE USE BY THE CUSTOMER AND FOR THE PROJECT NAMED IN THIS TITLE BLOCK. IT SHALL NOT BE PROVIDED TO ANY OTHER SIGN MANUFACTURER OR USED FOR ANY OTHER PROJECT WITHOUT THE WRITTEN PERMISSION OF NW SIGN INDUSTRIES, INC. THIS DRAWING IS AN INSTRUMENT OF SERVICE AND SHALL REMAIN THE EXCLUSIVE PROPERTY OF NW SIGN INDUSTRIES, INC. ©NW SIGN INDUSTRIES, INC. 2008

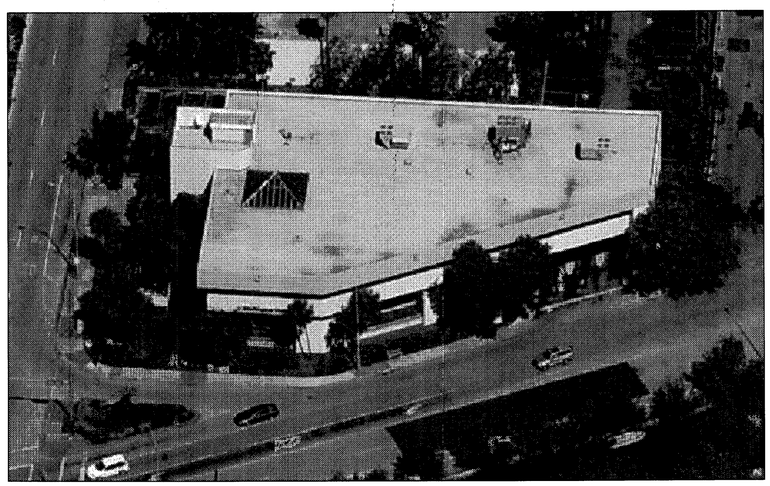

SOUTHERN VIEW OF SITE

NOT TO SCALE

WAMU BUILDING ID #1924
1801 ALTON RD.
MIAMI BEACH, FL 33139

B09035151

LEGAL DESCRIPTION:
A PORTION OF:
THE EAST 50 FEET OF LOT 6, LOT 10, LESS THE NORTH 2.8 FEET THEREOF, AND LOT 11, IN BLOCK 11 OF "ISLAND VIEW SUBDIVISION", ACCORDING TO THE PLAT THEREOF, AS RECORDED IN PLAT BOOK 6, AT PAGE 115 OF THE PUBLIC RECORDS OF MIAMI-DADE COUNTY, FLORIDA.

NOTES:

1. THIS PLAN WAS PREPARED BASED ON A SPECIFIC PURPOSE SURVEY PREPARED BY PINNELL SURVEY, INC.

2. NO FREESTANDING SIGN LOCATED ON BANK PARCEL.

THE FOL...
BUILDING:
ZONING: 9/23/0
DRB/HPB:
CONCURRENCY:
PLUMBING:
ELECTRICAL:
MECHANICAL:
FIRE PREVENTION:
ENGINEERING:
PUBLIC WORKS:
STRUCTURAL: 9/23/09
ELEVATOR:

BOHLER ID #54

BOHLER ENGINEERING

CORPORATE OFFICE: ♦ WARREN, NJ
OFFICES: ♦ SOUTHBOROUGH, MA ♦ ALBANY, NY ♦ ROCHESTER, NY ♦ DONGONGSA, NY ♦ HAMILTON, NJ ♦ CENTER VALLEY, PA ♦ DOVER, MD ♦ TOWSON, MD ♦ PITTSBURGH, PA ♦ WASHINGTON, NA ♦ FORT LAUDERDALE, FL

CIVIL & CONSULTING ENGINEERS
SURVEYORS
PROJECT MANAGERS
ENVIRONMENTAL CONSULTANTS
LANDSCAPE ARCHITECTS

ALL REPORTS, MAPS, PLANS, OPINIONS, PROJECTS, DATA, OR OTHER INFORMATION PREPARED OR FURNISHED BY BOHLER ENGINEERING AND ANY AND ALL PROJECTS AND/OR WORK PRODUCT RELATED THERETO ARE INSTRUMENTS OF SERVICE AND SHALL REMAIN THE PROPERTY OF BOHLER ENGINEERING. BOHLER ENGINEERING SHALL RETAIN ALL COMMON LAW, STATUTORY AND OTHER RIGHTS, INCLUDING THE COPYRIGHT THERETO.

REVISIONS:

REV:	DATE:	COMMENT:	BY:

NOT APPROVED FOR CONSTRUCTION

PROJECT No.:
DRAWN BY: CAD
CHECKED BY: JMG
DATE: 12/30/08
SCALE: AS NOTED
CAD I.D.: SIGN-EXHIBIT-54

PROJECT:

MIAMI BEACH/ ALTON ROAD LOCATION

FOR

WAMU BANK

#1924

1801 ALTON RD.
CITY OF MIAMI BEACH
MIAMI-DADE COUNTY
FLORIDA

BOHLER ENGINEERING
RADICE III
1000 CORPORATE DRIVE, SUITE 250
FORT LAUDERDALE, FL 33334
PH: (954) 202-7000
FX: (954) 202-7070
www.BohlerEngineering.com

JASON M. GUNTHER
PROFESSIONAL ENGINEER
February 6, 2009
FLORIDA LICENSE No. 58629
FLORIDA BUSINESS CERT. OF AUTH. No. 27528

SHEET TITLE:

SIGN EXHIBIT

SHEET NUMBER:

1
OF 1

Printed on Friday, February 06, 2009, 8:51 AM by Cesar DeLeon
© C:\CASE-WAMU REBARDING\MIAMI-DADE COUNTY\54-1924-MIAMI BEACH-ALTON ROAD\SIGN-EXHIBIT-54-----LAYOUT: #1924

OFFICE COPY
CITY OF MIAMI BEACH
APPROVED FOR PERMIT BY
THE FOLLOWING:

BUILDING:
ZONING: 9/23/09
DRB/HPB:
CONCURRENCY:
PLUMBING:
ELECTRICAL: 09/09/23/09
MECHANICAL:
FIRE PREVENTION:
ENGINEERING:
PUBLIC WORKS:
STRUCTURAL: Perez 17/09/LPerez 9/23/09
ELEVATOR:

BOX 10-013

B0903751
1801 Alton Rd
Office Copy

CHASE INTERIOR REBRANDING CONVERSION

CHASE

MIAMI BEACH-ALTON ROAD

CHASE STORE ID #1742
WAMU BLDG. ID #1924
1801 ALTON ROAD
MIAMI BEACH, FL 33139

VICINITY MAP

LOCATION MAP

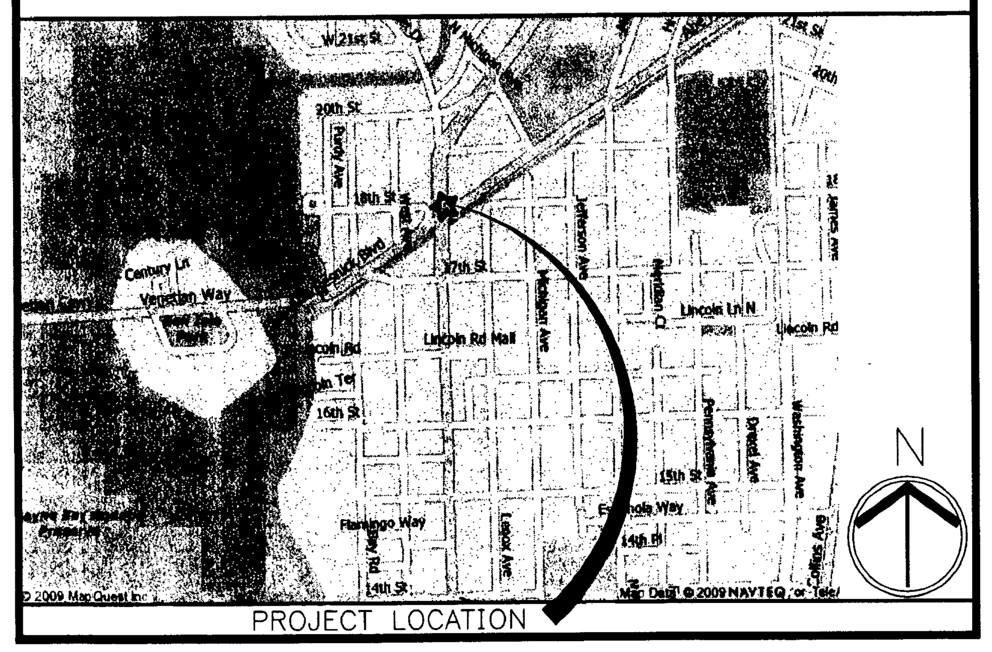

DRAWING INDEX

ARCHITECTURAL
A0.0 DRAWING INDEX, MAPS, PROJ. INFO
A0.0A RESPONSIBILITY SCHEDULE, KEY PLAN & AERIAL VIEW (7)
A0.0B CONSTRUCTION PHASING PLAN - FOR REFERENCE ONLY
A1.0 DEMOLITION PLAN
A1.0A DEMOLITION CEILING PLAN
A1.1 FLOOR PLAN
A1.2 FINISH PLAN
A1.3 FURNITURE PLAN
A2.0 REFLECTED CEILING PLAN
A3.0 INTERIOR ELEVATIONS, SECTIONS, AND DETAILS
A3.1 INTERIOR ELEVATIONS, SECTIONS, AND DETAILS
A3.2 INTERIOR ELEVATIONS, SECTIONS, AND DETAILS

MECHANICAL
M0.0 HVAC NOTES, SPECIFICATIONS AND DETAILS
M1.0 HVAC FLOOR PLAN

ELECTRICAL
E0.0 ELECTRICAL SPECIFICATIONS
E1.0 ELECTRICAL PLAN - LIGHTING
E2.0 ELECTRICAL PLAN - POWER
E3.0 ELECTRICAL PLAN - SYSTEMS
E4.0 ELECTRICAL RISER DIAGRAM AND PANEL SCHEDULES

PUBLIC WORKS
PLAN REVIEW NOTICE
Phone 305-673-7080 Fax 305-673-7028

THIS PLAN REVIEW CONSTITUTES APPROVAL FOR OBTAINING BUILDING PERMITS ONLY.

All construction and/or use of equipment in the right-of-way and/or easements, requires a separate Public Works Department permit prior to start of construction.

Permit Requirements: Proof of existing sidewalk/swale area conditions (pictures) and/or posting of sidewalk/roadway bonds (Public Works Inspection of the right-of-way will be required prior to final sign-off on the C.C. / C.O., or the release of bonds.)

Approved/Reviewed By: B. Duvall Date: 3/25/10

GENERAL NOTES

1. ALL WORK SHALL BE IN COMPLIANCE WITH APPLICABLE FEDERAL, STATE AND LOCAL BUILDING CODES, REGULATIONS, ORDINANCES AND STANDARDS INCLUDING ADA AND OR OTHER HANDICAP ACCESSIBILITY CODES.
2. GEN. CONTRACTOR SHALL COORDINATE WITH THE PROJECT MANAGEMENT COMPANY/ OWNER'S VENDORS REGARDING SCHEDULING AND SEQUENCING OF THE WORK.
3. THE CONSTRUCTION NOTES AND DRAWINGS ARE SUPPLIED TO ILLUSTRATE THE DESIGN AND GENERAL TYPE OF CONSTRUCTION DESIRED AND ARE INTENDED TO IMPLY THE FINEST QUALITY OF CONSTRUCTION, MATERIAL AND WORKMANSHIP THROUGHOUT.
4. THE DRAWINGS ARE NOT TO BE SCALED. FOR INFORMATION CONCERNING EXISTING CONDITIONS, ETC., VERIFICATION MUST BE DONE IN THE FIELD. LARGE SCALE DRAWINGS HAVE PRECEDENCE OVER SMALL SCALE DRAWINGS.
5. PRIOR TO COMMENCEMENT OF ANY CONSTRUCTION, CONTRACTOR SHALL VERIFY EXISTENCE AND LOCATION OF ALL EXISTING ABOVE AND BELOW GRADE, UTILITIES, INCLUDING SANITARY SEWER, STORM SEWER, WATER, GAS, ELECTRICAL, TELEPHONE, ETC. ANY DISCREPANCIES IN UTILITY LOCATIONS SHALL BE BROUGHT TO THE IMMEDIATE ATTENTION OF THE ARCHITECT.
6. GENERAL CONTRACTOR SHALL BE RESPONSIBLE FOR VERIFICATION OF ALL BUILDING DIMENSIONS PRIOR TO BEGINNING CONSTRUCTION AND SHALL IMMEDIATELY NOTIFY THE ARCHITECT OF ANY VARIANCE OR DISCREPANCY AFFECTING NEW CONSTRUCTION PRIOR TO PROCEEDING WITH WORK.
7. CONTRACTOR SHALL PROVIDE ALL NECESSARY BLOCKING IN WALLS FOR SUPPORT OF ALL RELOCATED/ NEW EQUIPMENT, SHELVING, ACCESSORIES AND OTHER DEVICES REQUIRED.
8. ALL PENETRATIONS SHALL RECEIVE CAULKING TO SEAL ANY TYPE OF ENERGY LOSS.
9. THE CONTRACTOR SHALL VERIFY AND COORDINATE ALL APPLICABLE DIMENSIONS OF FIXTURES AND EQUIPMENT SUPPLIED AND/OR INSTALLED BY OTHERS.
10. UPON COMPLETION OF PROJECT, OBTAIN ALL FINAL INSPECTIONS AS REQUIRED BY LOCAL JURISDICTIONS AND FURNISH OWNER WITH EVIDENCE OF ALL SUCH INSPECTIONS AND CERTIFICATES OF OCCUPANCY.
11. ALL MEANS OF EGRESS AND FIRE PROTECTION SHALL BE MAINTAINED AT ALL TIMES AND ANY SHUT DOWN OF LIFE SAFETY OR BUILDING SYSTEMS SHALL BE APPROVED AND COORDINATED IN ADVANCE WITH THE OWNER AND LOCAL BUILDING DEPARTMENT.
12. GENERAL CONTRACTOR TO PROVIDE DAILY TRASH REMOVAL. NO DUMPSTERS/ STORAGE CONTAINERS WILL BE ALLOWED ON SITE.
13. GENERAL CONTRACTOR IS RESPONSIBLE FOR COORDINATING THE OWNER'S VENDORS ON SITE DURING CONSTRUCTION.
14. GENERAL CONTRACTOR SHALL BE RESPONSIBLE FOR COORDINATION OF ALL THE UTILITY SERVICES FOR THE PROJECT.

LEGAL DESCRIPTION

ISLAND VIEW SUB PB 6-115 E50FT OF LOT 6 & LOT 10 LESS N2.8FT & ALL LOT 11 BLK 11 LOT SIZE IRREGULAR OR 14848-571290 1.

PARCEL ID NUMBER IS 02-3233-012-0090.

SCOPE OF T.I. MODIFICATION

SCOPE OF INTERIOR MODIFICATIONS TO THE PUBLIC AREAS TO INCLUDE THE FOLLOWING:

1. CIRCULAR SOFFIT AREAS ABOVE THE CIRCULAR FURNITURE LAYOUT TO BE MODIFIED/ REMOVED.
2. EXTEND EXISTING SUSPENDED CEILING GRID TO FILL AREAS WHERE SOFFIT IS REMOVED.
3. REMOVE TRACK LIGHTING AND DIRECTIONAL LIGHTING THAT HIGHLIGHTED EXISTING MARKETING DISPLAYS THAT WILL BE REMOVED
4. ADD LIGHTING TO MATCH EXISTING TO EXTEND THE EXISTING LIGHTING PATTERN IN MODIFIED CEILING AREAS. RELOCATE/ ADD PENDANTS AS NOTED.
5. MODIFY EXISTING MECHANICAL ONLY AS REQUIRED TO ENSURE PROPER SUPPLY AND RETURN TO AREAS MODIFIED WITH NEW FURNITURE LOCATIONS, WALL LOCATIONS, OR ENCLOSED AS SEPARATE ROOMS.
6. MODIFY EXISTING POWER SUPPLY ONLY TO ACCOMMODATE NEW INTERIOR SIGNAGE, ATM, AHD, VAULT AND/ OR MFD ADDITIONS/ RELOCATIONS, THE SHIFT IN WORKSTATIONS, TELLER LINES, NEW AND/OR REMOVED WALLS OR PARTIAL WALLS AND AS REQUIRED FOR POWER SUPPLY TO WINDOW SHADES (AS NOTED).
7. FLOOR FINISHES TO BE REMOVED AND REPLACED AS NOTED - CORRESPONDING TO NEW FURNITURE AND TELLER LINE LAYOUT.
8. ATM, AHD, N/D, PACKAGE RECEIVER, AND VAULTS MAY BE RELOCATED/ NEW AS NOTED ON PLANS.
9. ADD/ MODIFY VESTIBULE AS IDENTIFIED ON PLAN.
10. ALL WORK IS REQUIRED TO BE PERFORMED AFTER BANKING HOURS (NIGHT AND WEEKENDS). THE BRANCH WILL BE IN OPERATION.
11. NO PLUMBING WORK.

REVISION ISSUE LOG

REV #	ISSUE DATE	DESCRIPTION	AFFECTED SHEETS	REMARKS	BY
	03-11-09	ISSUED FOR OWNER REVIEW	ALL SHEETS		RS
	04-30-09	ISSUED FOR PERMIT	ALL SHEETS		RS
1	06-10-09	PERMIT COMMENTS - BLDG DEPARTMENT	A0.0, E0.0, E1.0, E2.0, E4.0	PMT-01	AP
2	06-10-09	OWNER REVISIONS	A0.0A,A0.0B,A1.0,A1.0A,A1.1,A1.2,A1.3,A2.0,A3.0,A3.1,A3.2,E1.0,E2.0,E3.0,M1.0	MODEL E CONVERSION	RS
-	06-10-09	ISSUE FOR CHASE REVIEW	ALL SHEETS		RS
3	06-30-09	OWNER REVISIONS	A1.0, A1.1, A1.2, A3.1, A3.2	-	DJC
4	07-28-09	PERMIT COMMENTS	A1.1, A3.1, A3.2		DJC
5	10-05-09	PERMIT COMMENTS	A0.0, A1.1, A2.0, A3.1, E1.0	PMT03	EW
6	12-03-09	OWNER REVISIONS	A1.0, A1.0A, A1.1, A1.2, A1.3, A2.0, A3.0, A3.1, M1.0, E1.0, E2.0, E3.0		EW
7	03-22-10	PERMIT COMMENTS	A0.0, A0.0A, A1.0A, A2.0, E0.0, E1.0	PMT04	WB

CODE DATA

JURISDICTION:
CITY OF MIAMI BEACH
BUILDING DEPARTMENT
ATTN.: RASHONDA WILSON1700
CONVENTION CENTER DRIVE,
MIAMI BEACH, FLORIDA 33139
T: 305.673.7610 EXT. 6621

BUILDING CODE
2007 FLORIDA BUILDING CODE
2007 FLORIDA PLUMBING CODE
2007 FLORIDA MECHANICAL CODE
2008 NATIONAL ELECTRIC CODE
2007 FLORIDA BUILDING CODE CH. 11
2007 FLORIDA BUILDING CODE CH. 13
2007 FLORIDA FIRE PREVENTION CODE

NOTE: THIS BUILDING IS NOT SPRINKLERED AND DOES NOT HAVE A FIRE ALARM

OCCUPANCY: - BUSINESS GROUP B
(5) ~~CONSTRUCTION TYPE:~~ TYPE V,B - UNPROTECTED
~~HEIGHT LIMITATION: 2 STORIES~~

ALLOWABLE AREA: 9,000 SF.
TOTAL BUILDING: 25,030 SF.
TOTAL BRANCH: 7,208 SF.
AREA OF MODIFICATIONS: 4,327 SF.

TOTAL OCCUPANT LOAD (BUSINESS)
7,208 SF./100 SF. PER OCCUPANT = 72

TOTAL EXITS REQUIRED = 2
TOTAL EXITS PROVIDED = 2

TOTAL WIDTH REQUIRED OF ALL EXITS = (72 X .2 =14.4 INCHES
TOTAL WIDTH PROVIDED OF ALL EXITS = (72" + 36" =108 INCHES

(5) MAXIMUN TRAVEL DISTANCE, FBC SEC. 1016: 200 FT.

COMMON PATH OF TRAVEL, FBC SEC. 1014.3: 75FT.

FIRE RESISTANCE RATINGS OF STRUCTURAL ELEMENTS
TABLE 601 TYPE V,B CONSTRUCTION

1. EXTERIOR WALLS	LOAD BEARING	0 HR.
	NON-LOAD BEARING	0 HR.
		NA
2. FIREWALLS		
3. FIRE SEPARATION ASSEMBLIES:	EXITS:	NA
	SHAFTS:	NA
	MIXED USE:	NA
	OTHERS:	NA
4. FIRE PARTITIONS		NA
5. DWELLING UNIT SEPARATION		NA
6. SMOKE BARRIERS		NA
SMOKE PARTITIONS		NA
7. NONBEARING PARTITIONS		0 HR.
8. INTERIOR BEARING WALLS		0 HR.
9. STRUCTURAL MEMBERS		0 HR.
10. FLOOR CONSTRUCTION		0 HR.
11. ROOF CONSTRUCTION		0 HR.

PROJECT INFORMATION

TENANT
J.P. MORGAN CHASE BANK
CHASE TOWER
MAIL CODE IL1-0475
TELEPHONE: (312) 325-3373
FAX: (312) 325-3385

PROJECT MANAGEMENT COMPANY
MENEMSHA
ATTN.: BECKY BEDWELL
169 LIBBEY PKWY.
WEYMOUTH, MA 02189
TELEPHONE: (781) 337-9012
FAX: (775) 637-9932

ARCHITECT
INTERPLAN, LLC
ATTN.: LOUISE CRAVER
933 LEE ROAD, FIRST FLOOR
ORLANDO, FL 32810
TELEPHONE: (407) 645-5008
FAX: (407) 644-0673

MECHANICAL AND ELECTRICAL ENGINEER
INTERPLAN, LLC
ATTN.: JERRY RUSSO
933 LEE ROAD, FIRST FLOOR
ORLANDO, FL 32810
TELEPHONE: (407) 645-5008
FAX: (407) 644-0673

NOTICE: In addition to the requirement of this permit there may be additional restrictions applicable to this property that may be found in the Public Records of this County and there may be additional permits required from other government entities such as water management districts, state agencies, or federal agencies. The City of Miami Beach assumes no responsibility for accuracy of or results from these plans which are approved subject to compliance with all Federal, State, and Local Laws, Rules, and Regulations.

OFFICE COPY
CITY OF MIAMI BEACH
APPROVED FOR PERMIT BY THE FOLLOWING:
BUILDING: 3/25/10
ZONING: 3/25/10
DRB/HPB:
CONCURRENCY:
PLUMBING:
ELECTRICAL: 03/25/10
MECHANICAL: 03/25/10
FIRE PREVENTION: 3/25/10
ENGINEERING: 03/25/10
PUBLIC WORKS: B. Duvall 3/25/10
STRUCTURAL:
ELEVATOR:

INTERPLAN LLC
ARCHITECTURE
ENGINEERING
INTERIOR DESIGN
PROJECT MANAGEMENT
AA 003420
CA8660
933 LEE ROAD, FIRST FLOOR
ORLANDO, FLORIDA 32810
PH 407.645.5008
FX 407.629.9124

SEAL: HARVEY JACOBY MAR 2 2 2010

CONSULTANT:

REVISIONS:

NO.	DATE	REMARKS
1	06-10-09	PERMIT COMMENTS
5	10-05-09	PERMIT COMMENTS
7	03-22-10	PERMIT COMMENTS

CHASE
INTERIOR REBRANDING CONVERSION
MIAMI BEACH - ALTON ROAD
WAMU BLDG ID# 1924 CHASE STORE ID# 1742
1801 ALTON ROAD
MIAMI, FL 33139

COPYRIGHT © 2009
INTERPLAN LLC RESERVES COPYRIGHT & OTHER RIGHTS RESTRICTING THESE DOCUMENTS TO THE ORIGINAL SITE OR PURPOSE FOR WHICH THEY WERE PREPARED. REPRODUCTIONS, CHANGES OR ASSIGNMENTS ARE PROHIBITED.

PROJECT NO: 2009.0109
DATE: 04-30-09

A0.0
COVER SHEET

DRAWN BY:
CHECKED BY: LRM / WB

CHASE INTERIOR REBRANDING CONVERSION

CHASE

MIAMI BEACH-ALTON ROAD

CHASE STORE ID #1742
WAMU BLDG. ID #1924
1801 ALTON ROAD
MIAMI BEACH, FL 33139

VICINITY MAP

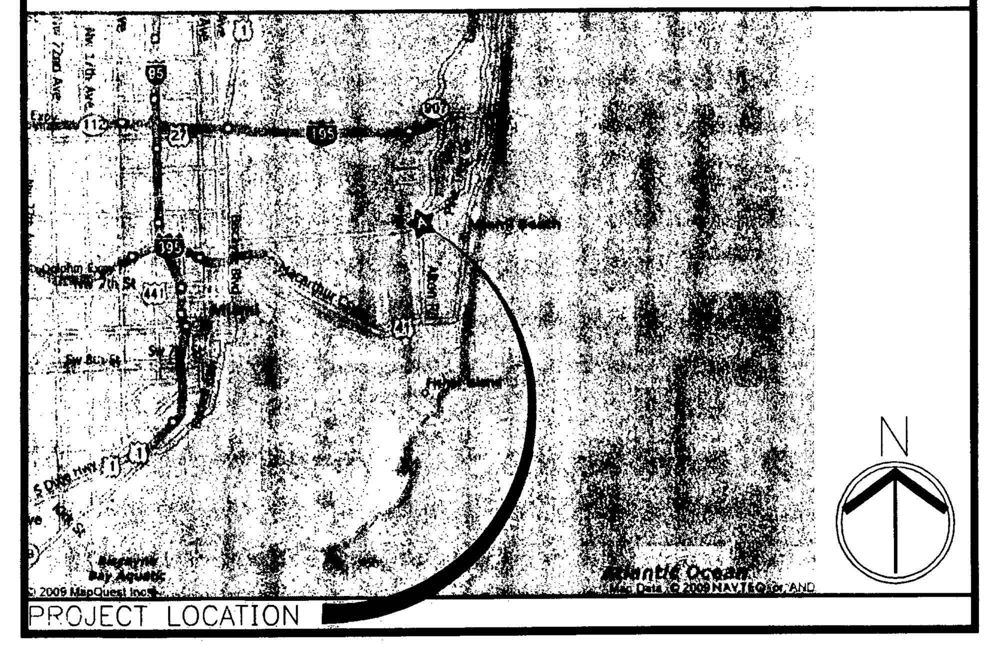

LOCATION MAP

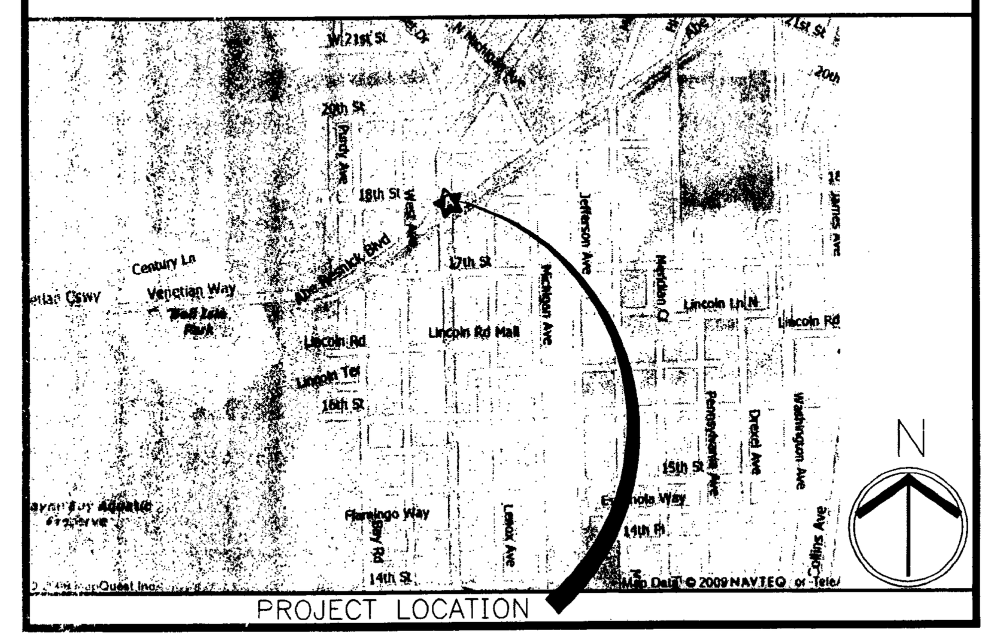

DRAWING INDEX

ARCHITECTURAL
A0.0 DRAWING INDEX, MAPS, PROJ. INFO
A0.0A RESPONSIBILITY SCHEDULE
A0.0B CONSTRUCTION PHASING PLAN – FOR REFERENCE ONLY
A1.0 DEMOLITION PLAN
A1.0A DEMOLITION CEILING PLAN
A1.1 FLOOR PLAN
A1.2 FINISH PLAN
A1.3 FURNITURE PLAN
A2.0 REFLECTED CEILING PLAN
A3.0 INTERIOR ELEVATIONS, SECTIONS, AND DETAILS
A3.1 INTERIOR ELEVATIONS, SECTIONS, AND DETAILS
A3.2 INTERIOR ELEVATIONS, SECTIONS, AND DETAILS

MECHANICAL
M0.0 HVAC NOTES, SPECIFICATIONS AND DETAILS
M1.0 HVAC FLOOR PLAN

ELECTRICAL
E0.0 ELECTRICAL SPECIFICATIONS
E1.0 ELECTRICAL PLAN – LIGHTING
E2.0 ELECTRICAL PLAN – POWER
E3.0 ELECTRICAL PLAN – SYSTEMS
E4.0 ELECTRICAL RISER DIAGRAM AND PANEL SCHEDULES (1)

GENERAL NOTES

1. ALL WORK SHALL BE IN COMPLIANCE WITH APPLICABLE FEDERAL, STATE AND LOCAL BUILDING CODES, REGULATIONS, ORDINANCES AND STANDARDS INCLUDING ADA AND OR OTHER HANDICAP ACCESSIBILITY CODES.
2. GEN. CONTRACTOR SHALL COORDINATE WITH THE PROJECT MANAGEMENT COMPANY/ OWNER'S VENDORS REGARDING SCHEDULING AND SEQUENCING OF THE WORK.
3. THE CONSTRUCTION NOTES AND DRAWINGS ARE SUPPLIED TO ILLUSTRATE THE DESIGN AND GENERAL TYPE OF CONSTRUCTION DESIRED AND ARE INTENDED TO IMPLY THE FINEST QUALITY OF CONSTRUCTION, MATERIAL AND WORKMANSHIP THROUGHOUT.
4. THE DRAWINGS ARE NOT TO BE SCALED. FOR INFORMATION CONCERNING EXISTING CONDITIONS, ETC., VERIFICATION MUST BE DONE IN THE FIELD. LARGE SCALE DRAWINGS HAVE PRECEDENCE OVER SMALL SCALE DRAWINGS.
5. PRIOR TO COMMENCEMENT OF ANY CONSTRUCTION, CONTRACTOR SHALL VERIFY EXISTENCE AND LOCATION OF ALL EXISTING ABOVE AND BELOW GRADE, UTILITIES, INCLUDING SANITARY SEWER, STORM SEWER, WATER, GAS, ELECTRICAL, TELEPHONE, ETC. ANY DISCREPANCIES IN UTILITY LOCATIONS SHALL BE BROUGHT TO THE IMMEDIATE ATTENTION OF THE ARCHITECT.
6. GENERAL CONTRACTOR SHALL BE RESPONSIBLE FOR VERIFICATION OF ALL BUILDING DIMENSIONS PRIOR TO BEGINNING CONSTRUCTION AND SHALL IMMEDIATELY NOTIFY THE ARCHITECT OF ANY VARIANCE OR DISCREPANCY AFFECTING NEW CONSTRUCTION PRIOR TO PROCEEDING WITH WORK.
7. CONTRACTOR SHALL PROVIDE ALL NECESSARY BLOCKING IN WALLS FOR SUPPORT OF ALL RELOCATED/ NEW EQUIPMENT, SHELVING, ACCESSORIES AND OTHER DEVICES REQUIRED.
8. ALL PENETRATIONS SHALL RECEIVE CAULKING TO SEAL ANY TYPE OF ENERGY LOSS
9. THE CONTRACTOR SHALL VERIFY AND COORDINATE ALL APPLICABLE DIMENSIONS OF FIXTURES AND EQUIPMENT SUPPLIED AND/OR INSTALLED BY OTHERS.
10. UPON COMPLETION OF PROJECT, OBTAIN ALL FINAL INSPECTIONS AS REQUIRED BY LOCAL JURISDICTIONS AND FURNISH OWNER WITH EVIDENCE OF ALL SUCH INSPECTIONS AND CERTIFICATES OF OCCUPANCY.
11. ALL MEANS OF EGRESS AND FIRE PROTECTION SHALL BE MAINTAINED AT ALL TIMESAND ANY SHUT DOWN OF LIFE SAFETY OR BUILDING SYSTEMS SHALL BE APPROVED AND COORDINATED IN ADVANCE WITH THE OWNER AND LOCAL BUILDING DEPARTMENT.
12. GENERAL CONTRACTOR TO PROVIDE DAILY TRASH REMOVAL. NO DUMPSTERS/ STORAGE CONTAINERS WILL BE ALLOWED ON SITE.
13. GENERAL CONTRACTOR IS RESPONSIBLE FOR COORDINATING THE OWNER'S VENDORS ON SITE DURING CONSTRUCTION.
14. GENERAL CONTRACTOR SHALL BE RESPONSIBLE FOR COORDINATION OF ALL THE UTILITY SERVICES FOR THE PROJECT.

LEGAL DESCRIPTION

ISLAND VIEW SUB PB 6-115 E50FT OF LOT 6 & LOT 10 LESS N2.8FT & ALL LOT 11 BLK 11 LOT SIZE IRREGULAR OR 14848-571290 1.

PARCEL ID NUMBER IS 02-3233-012-0090.

SCOPE OF T.I. MODIFICATION

SCOPE OF INTERIOR MODIFICATIONS TO THE PUBLIC AREAS TO INCLUDE THE FOLLOWING:

1. CIRCULAR SOFFIT AREAS ABOVE THE CIRCULAR FURNITURE LAYOUT TO BE MODIFIED/ REMOVED.
2. EXTEND EXISTING SUSPENDED CEILING GRID TO FILL AREAS WHERE SOFFIT IS REMOVED.
3. REMOVE TRACK LIGHTING AND DIRECTIONAL LIGHTING THAT HIGHLIGHTED EXISTING MARKETING DISPLAYS THAT WILL BE REMOVED
4. ADD LIGHTING TO MATCH EXISTING TO EXTEND THE EXISTING LIGHTING PATTERN IN MODIFIED CEILING AREAS. RELOCATE/ ADD PENDANTS AS NOTED.
5. MODIFY EXISTING MECHANICAL ONLY AS REQUIRED TO ENSURE PROPER SUPPLY AND RETURN TO AREAS MODIFIED WITH NEW FURNITURE LOCATIONS, WALL LOCATIONS, OR ENCLOSED AS SEPARATE ROOMS.
6. MODIFY EXISTING POWER SUPPLY ONLY TO ACCOMMODATE NEW INTERIOR SIGNAGE, ATM, AHD, VAULT AND/ OR MFD ADDITIONS/ RELOCATIONS, THE SHIFT IN WORKSTATIONS, TELLER LINES, NEW AND/OR REMOVED WALLS OR PARTIAL WALLS AND AS REQUIRED FOR POWER SUPPLY TO WINDOW SHADES (AS NOTED).
7. FLOOR FINISHES TO BE REMOVED AND REPLACED AS NOTED - CORRESPONDING TO NEW FURNITURE AND TELLER LINE LAYOUT.
8. ATM, AHD, N/D, PACKAGE RECEIVER, AND VAULTS MAY BE RELOCATED/ NEW AS NOTED ON PLANS.
9. ADD/ MODIFY VESTIBULE AS IDENTIFIED ON PLAN.
10. ALL WORK IS REQUIRED TO BE PERFORMED AFTER BANKING HOURS (NIGHT AND WEEKENDS). THE BRANCH WILL BE IN OPERATION.
11. NO PLUMBING WORK.

REVISION ISSUE LOG

REV #	ISSUE DATE	DESCRIPTION	AFFECTED SHEETS	REMARKS	BY
	03-11-09	ISSUED FOR OWNER REVIEW	ALL SHEETS		RS
	04-30-09	ISSUED FOR PERMIT	ALL SHEETS		RS
1	06-10-09	PERMIT COMMENTS – BLDG DEPARTMENT	A0.0, E0.0, E1.0, E2.0, E4.0	PMT-01	AP
2	06-10-09	OWNER REVISIONS	A0.0A,A0.0B,A1.0,A1.0A,A1.1,A1.2,A1.3,A2.0,A3.0,A3.1,A3.2,E1.0,E2.0,E3.0,M1.0	MODEL E CONVERSION	RS
–	06-10-09	ISSUE FOR CHASE REVIEW	ALL SHEETS		RS
3	06-30-09	OWNER REVISIONS	A1.0, A1.1, A1.2, A3.1, A3.2	–	DJC
4	07-28-09	PERMIT COMMENTS	A1.1, A3.1, A3.2		DJC
5	10-05-09	PERMIT COMMENTS	A0.0, A1.1, A2.0, A3.1, E1.0	PMT03	EW
6	12-03-09	OWNER REVISIONS	A1.0, A1.0A, A1.1, A1.2, A1.3, A2.0, A3.0, A3.1, M1.0, E1.0, E2.0, E3.0		EW

CODE DATA

JURISDICTION:
CITY OF MIAMI BEACH
BUILDING DEPARTMENT
ATTN.: RASHONDA WILSON1700
CONVENTION CENTER DRIVE,
MIAMI BEACH, FLORIDA 33139
T. 305.673.7610 EXT. 6621

BUILDING CODE
2007 FLORIDA BUILDING CODE
2007 FLORIDA PLUMBING CODE
2007 FLORIDA MECHANICAL CODE
2008 NATIONAL ELECTRIC CODE
2007 FLORIDA BUILDING CODE CH. 11
2007 FLORIDA BUILDING CODE CH. 13
2007 FLORIDA FIRE PREVENTION CODE

NOTE: THIS BUILDING IS NOT SPRINKLERED AND DOES NOT HAVE A FIRE ALARM

OCCUPANCY: - BUSINESS GROUP B

(5) ~~CONSTRUCTION TYPE:~~ TYPE V,B - UNPROTECTED

~~HEIGHT LIMITATION: 2 STORIES~~

ALLOWABLE AREA: 9,000 S.F.
TOTAL BUILDING: 25,030 SF.
TOTAL BRANCH: 7,208 SF.
AREA OF MODIFICATIONS: 4,327 SF.

TOTAL OCCUPANT LOAD (BUSINESS)
7,208 S.F./100 S.F. PER OCCUPANT = 72

TOTAL EXITS REQUIRED = 2
TOTAL EXITS PROVIDED = 2

TOTAL WIDTH REQUIRED OF ALL EXITS =
(72 X .2 =14.4 INCHES
TOTAL WIDTH PROVIDED OF ALL EXITS =
(72" + 36" =108 INCHES

(5) MAXIMUN TRAVEL DISTANCE, FBC SEC. 1016: 200 FT.

COMMON PATH OF TRAVEL, FBC SEC. 1014.3: 75FT.

FIRE RESISTANCE RATINGS OF STRUCTURAL ELEMENTS
TABLE 601 TYPE V,B CONSTRUCTION

1. EXTERIOR WALLS	LOAD BEARING	0 HR.
	NON-LOAD BEARING	0 HR.
		NA
2. FIREWALLS		
3. FIRE SEPARATION ASSEMBLIES:	EXITS:	NA
	SHAFTS:	NA
	MIXED USE:	NA
	OTHERS:	NA
4. FIRE PARTITIONS		NA
5. DWELLING UNIT SEPARATION		NA
6. SMOKE BARRIERS		NA
SMOKE PARTITIONS		NA
7. NONBEARING PARTITIONS		0 HR.
8. INTERIOR BEARING WALLS		0 HR.
9. STRUCTURAL MEMBERS		0 HR.
10. FLOOR CONSTRUCTION		0 HR.
11. ROOF CONSTRUCTION		0 HR.

PUBLIC WORKS
PLAN REVIEW NOTICE
Phone 305-673-7080 Fax 305-673-7028

THIS PLAN REVIEW CONSTITUTES APPROVAL FOR OBTAINING BUILDING PERMITS ONLY.

All construction and/or use of equipment in the right-of-way and/or easements, requires a separate Public Works Department permit prior to start of construction.

Permit Requirements: Proof of existing sidewalk/swale area conditions (pictures) and/or posting of sidewalk/roadway bonds (Public Works inspection of the right-of-way will be required prior to final sign-off on the C.C. / C.O., or the release of bonds.)

Approved/Reviewed By: [signature] Date: 02.09.10

PROJECT INFORMATION

TENANT
J.P. MORGAN CHASE BANK
CHASE TOWER
MAIL CODE IL1-0475
TELEPHONE: (312) 325-3373
FAX: (312) 325-3385

PROJECT MANAGEMENT COMPANY
MENEMSHA
ATTN.: BECKY BEDWELL
169 LIBBEY PKWY.
WEYMOUTH, MA 02189
TELEPHONE: (781) 337-9012
FAX: (775) 637-9932

ARCHITECT
INTERPLAN, LLC
ATTN.: LOUISE CRAVER
933 LEE ROAD, FIRST FLOOR
ORLANDO, FL 32810
TELEPHONE: (407) 645-5008
FAX: (407) 644-0673

MECHANICAL AND ELECTRICAL ENGINEER
INTERPLAN, LLC
ATTN.: JERRY RUSSO
933 LEE ROAD, FIRST FLOOR
ORLANDO, FL 32810
TELEPHONE: (407) 645-5008
FAX: (407) 644-0673

OFFICE COPY
CITY OF MIAMI BEACH
APPROVED FOR PERMIT BY THE FOLLOWING:
BUILDING: [signature] 2/24/10
ZONING: [signature] 3/17/10
DRB/HPB:
CONCURRENCY:
PLUMBING:
ELECTRICAL: [signature] 01/15/10
MECHANICAL: [signature] 01/19/10
FIRE PREVENTION: [signature] 01/20/10
ENGINEERING:
PUBLIC WORKS: [signature] 02.09.10
STRUCTURAL:
ELEVATOR:

INTERPLAN LLC
ARCHITECTURE
ENGINEERING
INTERIOR DESIGN
PROJECT MANAGEMENT

AA 003420
CA8660

933 LEE ROAD, FIRST FLOOR
ORLANDO, FLORIDA 32810
PH 407.645.5008
FX 407.629.9124

SEAL: [signature]
HARVEY JACOBY
DEC 0 7 2009

CONSULTANT:

REVISIONS:

NO.	DATE	REMARKS
1	06-10-09	PERMIT COMMENTS
5	10-05-09	PERMIT COMMENTS

CHASE
INTERIOR REBRANDING CONVERSION
MIAMI BEACH - ALTON ROAD
WAMU BLDG ID# 1924 CHASE STORE ID# 1742
1801 ALTON ROAD
MIAMI, FL 33139

COPYRIGHT © 2009
INTERPLAN LLC RESERVES COPYRIGHT & OTHER RIGHTS RESTRICTING THESE DOCUMENTS TO THE ORIGINAL SITE OR PURPOSE FOR WHICH THEY WERE PREPARED. REPRODUCTIONS, CHANGES OR ASSIGNMENTS ARE PROHIBITED.

PROJECT NO: 2009.0109
DATE: 04-30-09

A0.0
COVER SHEET

DRAWN BY: [initials]
CHECKED BY: [initials]

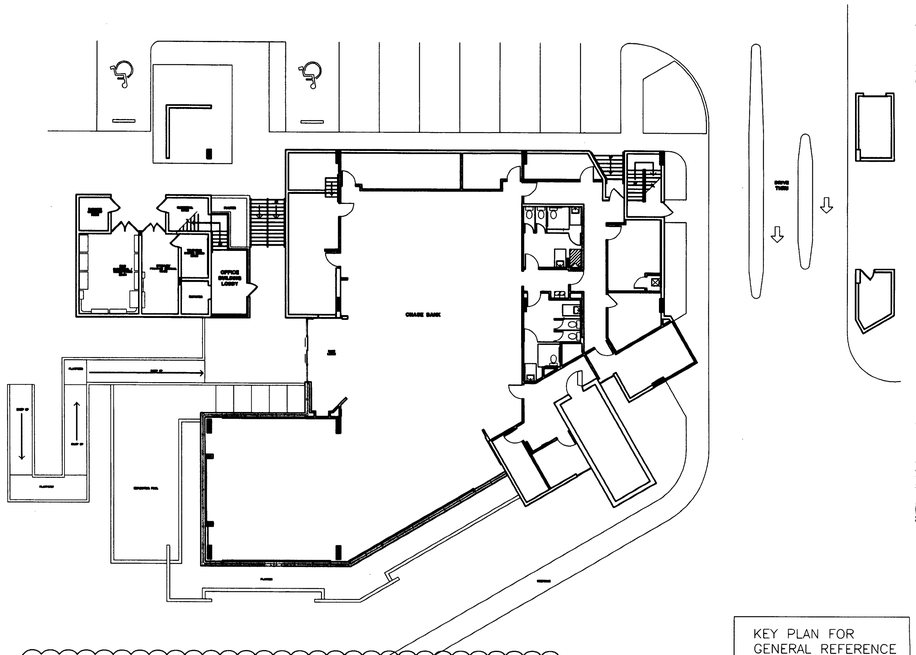

KEY PLAN FOR GENERAL REFERENCE ONLY

7 1 KEY PLAN
NOT TO SCALE

N

7 2 AERIAL VIEW
NOT TO SCALE

N

Chase/WaMu Rebrand Responsibility Schedule					
		PMC Supplied	PMC Installed	GC Supplied	GC Installed
Demo	Demolition			*	*
	Daily carting/hauling			*	*
	Daily cleaning - ready for Bank Operations			*	*
	Final Cleaning			*	*
	Demo of all WaMu Marketing/Branding interior			*	*
Doors & Windows	Interior doors			*	*
	Glass/glazing, Aluminum entry doors			*	*
	BR Doors	*			*
Finishes	Carpet	*			*
	Pedimat	*			*
	Walk off carpet tiles	*			*
	VCT			*	*
	Wood Floor	*			*
	Ceramic Tile	*			*
	Ceiling			*	*
	Base			*	*
	Paint			*	*
	Wall covering	*			*
Equipment	BR Glass	*	*		
	Kevlar panels	*			*
	ATM Rigging	*	*		
Fire Protection	Sprinkler work			*	*
Electric	Light fixtures	*			*
	All other labor and material			*	*
Low Voltage Cabling	Insight	*	*		
Security	ADT	*	*		
Furniture	Chairs	*	*		
	Steelcase Work Stations	*	*		
	Work Station Panels	*	*		
	Coffee table	*	*		
	End table	*	*		
	Teller counter	*	*		
	CSC	*	*		
	TCD	*	*		
	KMDI Mock Soffit	*			*
	KMDI Illuminated Soffit	*			*
	Check Desk	*	*		
	Window Shades Blinds	*	*		
	Curtains	*	*		
2	Queue Ropes	*			*
	Large Cash Vault	*	*		
	~~After Hours Depository~~	*	*		
	Package Receiver	*	*		
	Large Safe	*	*		

GC is responsible to verify schedule with all PMC/Chase Service providers
Note: Not all items indicated above may apply - confirm with PMC/ Chase Service providers.

INTERPLAN LLC
ARCHITECTURE
ENGINEERING
INTERIOR DESIGN
PROJECT MANAGEMENT

AA 003420
CA8660

933 LEE ROAD, FIRST FLOOR
ORLANDO, FLORIDA 32810
PH 407.645.5008
FX 407.629.9124

SEAL:

HARVEY JACOBY
MAR 2 2 2010

CONSULTANT:

REVISIONS:

NO.	DATE	REMARKS
2	06-09-09	OWNER REVISIONS
7	03-22-10	PERMIT COMMENTS

CHASE

INTERIOR REBRANDING CONVERSION
MIAMI BEACH - ALTON ROAD
WAMU BLDG ID# 1924 CHASE STORE ID# 1742
1801 ALTON ROAD
MIAMI, FL 33139

COPYRIGHT © 2009
INTERPLAN LLC RESERVES
COPYRIGHT & OTHER RIGHTS
RESTRICTING THESE DOCUMENTS
TO THE ORIGINAL SITE OR
PURPOSE FOR WHICH THEY WERE
PREPARED. REPRODUCTIONS,
CHANGES OR ASSIGNMENTS ARE
PROHIBITED.

PROJECT NO: 2009.0109
DATE: 04-30-09

A0.0A
RESPONSIBILITY SCHEDULE

DRAWN BY:
CHECKED BY: LRM/ab

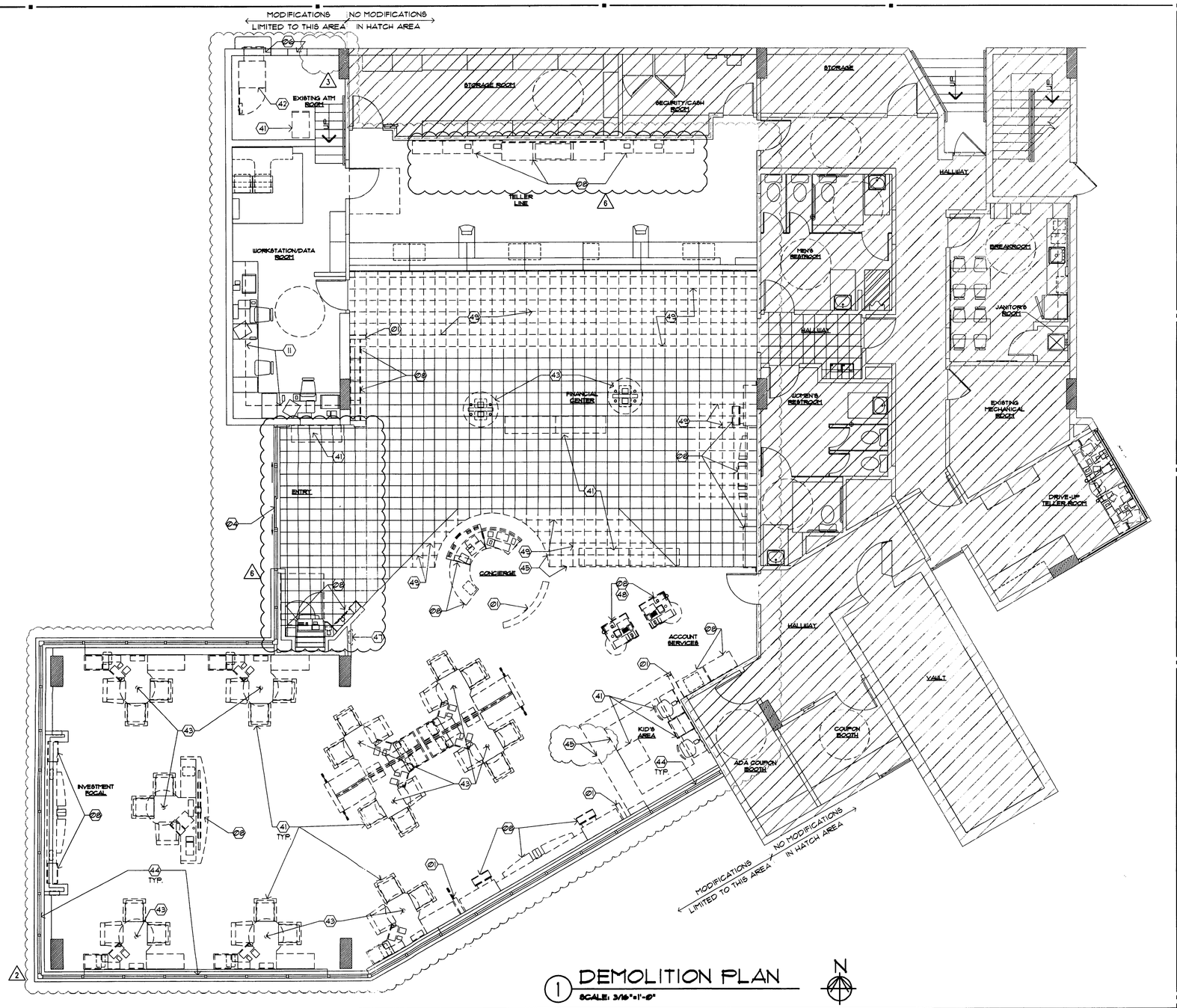

1 DEMOLITION PLAN

SCALE: 3/16"=1'-0"

N

SYMBOL LEGEND

- (01) SHEET KEY NOTE
- (101A) DOOR SYMBOL (NEW OR MODIFIED)
- (A) WINDOW SYMBOL (NEW OR MODIFIED)
- B.E. BANK EQUIPMENT SUPPLIED AND INSTALLED BY BANK EQUIPMENT CONTRACTOR (N.I.C.)- REQUIRED OPENINGS, ELEC POWER, AND CAULKING BY GENERAL CONTR.
- O.E. OFFICE EQUIPMENT SUPPLIED AND INSTALLED BY CHASE BANK.

DEMOLITION GENERAL NOTES

1. DEMOLITION PLANS ARE ILLUSTRATIVE IN NATURE ONLY. THEY ARE INTENDED TO ASSIST THE GENERAL CONTRACTOR IN DETERMINING THE SCOPE OF THE WORK. THERE IS NO REFERENCE THAT ALL DEMOLITION AND EXISTING CONDITIONS ARE SHOWN.
2. CONTRACTOR TO FIELD VERIFY ALL EXISTING CONDITIONS AND CONFIRM ALL DEMOLITION REQUIRED FOR CONFORMANCE OF THE FINAL CONSTRUCTION DOCUMENTS.
3. DASHED LINES TYPICALLY REPRESENT ITEMS TO BE REMOVED, RELOCATED OR DEMOLISHED ON THE DEMOLITION PLAN ONLY. REFERENCE THE DEMOLITION NOTES FOR DESCRIPTION OF THESE GENERAL ITEMS.
4. TRASH TO BE REMOVED DAILY BY G.C.
5. GENERAL CONTRACTOR SHALL BE RESPONSIBLE FOR CLEANING OF TENANT SPACE BOTH DURING AND FOLLOWING DEMOLITION WORK.
6. PROTECT ALL EXISTING MATERIALS TO REMAIN. REPAIR AND PATCH THESE EXISTING MATERIALS DURING CONSTRUCTION WHERE NEEDED. MATCH NEW MATERIALS INSTALLED TO ENSURE THAT ALL DEMOLITION AND NEW CONSTRUCTION IS COMPATIBLE AND INDISTINGUISHABLE. REQUIRED PROTECTION INCLUDES BUT IS NOT LIMITED TO THE FOLLOWING:
   - -STOREFRONT BULKHEAD
   - -DRYWALL
   - -ELECTRICAL OUTLETS AND SWITCHES
   - -EXTERIOR DOORS AND FRAMES
   - -FIRE PROTECTION SYSTEM
   - -MECHANICAL EQUIPMENTS
   - -FIRE PROTECTION
   - -FIRE RATED PENETRATIONS
7. IN AREAS INDICATED TO RECEIVE NEW FLOOR COVERING, REMOVE EXISTING FLOOR MATERIALS AND PREPARE SLAB FOR INSTALLATION OF NEW FLOORING MATERIALS
8. REFER TO NEW FLOOR AND/OR CEILING PLAN FOR EXTENT OF WORK TO REMAIN OR TO BE RELOCATED.
9. REFER TO DEMOLITION REFLECTED CEILING PLAN, SHEET A1.0A FOR DEMOLITION INFORMATION REGARDING CEILING, LIGHTING AND SOFFITS.
10. GENERAL CONTRACTOR TO SALVAGE REMOVED MILLWORK FOR POSSIBLE RE-USE. COORDINATE WITH PMC & CHASE REGARDING IT'S RE-USE ON SITE OR TO COORDINATE IT'S RELOCATION TO OTHER LOCATION.
11. ELECTRICIAN TO CAP ALL ABANDONED OUTLET LOCATIONS AND REMOVE POWER BACK TO IT'S SOURCE.
12. MODIFICATIONS TO AND/OR REMOVAL OF BUILDING COMPONENTS, MECHANICAL, ELECTRICAL AND PLUMBING SYSTEMS SHALL BE IN CONFORMANCE WITH LOCAL CODE REQUIREMENTS FOR COMMERCIAL/BUSINESS FACILITIES.
13. EXISTING ELECTRICAL FLOOR BOXES AT TELLER KIOSKS TO BE ABANDONED. REFERENCE ELECTRICAL PLANS. PATCH/ REPAIR EXISTING SLAB AS REQUIRED. FLOOR BOXES TO REMAIN. INFILL WITH THINSET, LEVEL WITH SLAB.
14. STRIP ALL EXISTING WALL COVERING/ MURALS. PREP WALLS FOR NEW FINISHES.
15. G.C. TO KEEP ALL EXISTING PENDANTS FOR REUSE.
16. EXISTING QUICK DROP BOX TO BE REMOVED, TYP. TURN OVER TO PMC.

DEMOLITION SHEET KEY NOTES

FLOOR PLAN

- (01) EXISTING WALL TO BE REMOVED, TYP.
- (02) PORTION OF EXISTING WALL TO REMAIN (2)
- (03) NOT USED.
- (04) EXISTING DOOR AND FRAME TO REMAIN
- (05) NOT USED.
- (06) PORTION OF EXISTING WALL TO BE REMOVED TO ACCOMMODATE NEW WALL OPENING
- (07) NOT USED.
- (08) EXISTING COUNTER AND MILLWORK TO BE REMOVED.
- (09) NOT USED.
- (10) NOT USED.
- (11) EXISTING SHELVES TO BE REMOVED. (2)

FF & E

- (41) EXISTING FURNITURE TO BE REMOVED.
- (42) EXISTING ATM TO BE REMOVED AND/ OR RELOCATED.
- (43) EXISTING FURNITURE AND PANEL SYSTEMS TO BE REMOVED AND RECONFIGURED IN NEW LOCATION PER FURNITURE PLAN.
- (44) EXISTING WINDOW BLINDS TO BE REMOVED, TYP.
- (45) EXISTING FLOOR TRANSITION TO BE REMOVED
- (46) EXISTING EQUIPMENT TO BE REMOVED
- (47) EXISTING FIRE EXTINGUISHER TO BE REMOVED AND RELOCATED.
- (48) EXISTING ELECTRICAL, COMMUNICATIONS, FIRE SAFETY EQUIPMENT, ETC. TO BE RELOCATED. REFERENCE ELECTRICAL PLANS.
- (49) EXISTING FLOOR FINISH TO BE REMOVED. (2)

INTERPLAN LLC

ARCHITECTURE
ENGINEERING
INTERIOR DESIGN
PROJECT MANAGEMENT

AA 003420
CA8660

933 LEE ROAD, FIRST FLOOR
ORLANDO, FLORIDA 32810
PH 407.645.5008
FX 407.629.9124

SEAL:

DEC 07 2009

CONSULTANT:

REVISIONS:

NO.	DATE	REMARKS
2	06-09-09	OWNER REVISIONS
3	06-30-09	OWNER REVISIONS
6	12-03-09	OWNER REVISIONS

CHASE

INTERIOR REBRANDING CONVERSION
MIAMI BEACH - ALTON ROAD
WAMU BLDG ID# 1924 CHASE STORE ID# 1742
1801 ALTON ROAD
MIAMI, FL 33139

COPYRIGHT © 2009
INTERPLAN LLC. RESERVES COPYRIGHT & OTHER RIGHTS RESTRICTING THESE DOCUMENTS TO THE ORIGINAL SITE OR PURPOSE FOR WHICH THEY WERE PREPARED. REPRODUCTIONS, CHANGES OR ASSIGNMENTS ARE PROHIBITED.

PROJECT NO: 2009.0109

DATE: 04-30-09

A1.0

DEMOLITION FLOOR PLAN

DRAWN BY: MEG

CHECKED BY: EJW

LEGEND

- GYP. BD. CEILING - NEW
  COLOR:
  5/8" GYP. BD. SHEATHING
- ACT-1 — ACOUSTICAL CEILING: ALL AREAS
  MANUFACTURER: ARMSTRONG
  MODEL: ULTIMA OPEN PLAN BEVELED
  COLOR: WHITE
  SIZE: 24" x 24" x 3/4"
  EDGE: BEVELED TEGULAR
  GRID: INTERLUDE XL 9/16" EXPOSED TEE
  GRID FINISH: WHITE
- ACT-2 — ACOUSTICAL CEILING: ALL AREAS
  MANUFACTURER: ARMSTRONG
  MODEL: ULTIMA OPEN PLAN BEVELED
  COLOR: WHITE
  SIZE: 24" x 48" x 3/4"
  EDGE: BEVELED TEGULAR
  GRID: INTERLUDE XL 9/16" EXPOSED TEE
  GRID FINISH: WHITE
- SLEEVES THRU CEILING FOR DATA CABLES
- 2'x4' RECESSED LIGHT FIXTURE IN SUSPENDED CEILING SYSTEM.
- 1 X 4 SURFACE MOUNTED FLUORESCENT LIGHT FIXTURE.
- FLUORESCENT STRIP LIGHT FIXTURE.
- 2'x2' LAY-IN FLUORESCENT
- LED CANOPY LIGHT
- 4"X4" COMPACT FLUORESCENT DOWN LIGHT
- 4"X4" WALL WASHER
- EXIT SIGN (DIRECTIONAL)
- EXIT SIGN, LOCATE CENTRALLY OVER DOOR(S)
- EMERGENCY LIGHT, MOUNT TO CEILING
- BLUE PENDANT LIGHT FIXTURE, ALIGN W/ CENTER OF FIXTURE BELOW. RE: RCP FOR MOUNTING HEIGHT - SEE L-10 SPEC. BELOW.
- AMBER PENDANT LIGHT FIXTURE, ALIGN W/ CENTER OF FIXTURE BELOW. RE: RCP FOR MOUNTING HEIGHT - SEE L-9 SPEC. BELOW.
- AMBIENT DOWNLIGHT
- MONOPOINT SPOTLIGHT
- TRACK LIGHT MOUNTED TO BOTTOM OF CEILING
- COVE LIGHTING FIXTURE
- SURFACE MOUNTED LIGHT FIXTURE
- EXHAUST GRILLE
- SUPPLY DIFFUSER
- RETURN GRILLE
- EXHAUST FAN, RE: MECHANICAL
- SP — SPEAKER
- SPRINKLER HEAD
- E = EXISTING TO REMAIN
- D = DEMO
- DR = DEMO TO BE RELOCATED
- R = RELOCATED (NEW LOCATION)
- N = NEW

L-9 — PENDANT LIGHT, CENTER ON TELLER TRANS. WINDOW
MANUFACTURER: BESA LIGHTING
DESCRIPTION: AMBER PENDANT LIGHT
MODEL: IT-1518Ø-8NG18 (AMBER) RIVA II 12Ø V STERN PENDANT W/ 18 WATT GU-24 LAMP INCLUDED
MOUNTING HT: REFERENCE DRAWINGS
G.C. TO PURCHASE FROM:
CONTACT: ACCUSERV SUPPLY, BUDDY BOCKWEG
PHONE: (817) 701-1318
E-MAIL: BBOCKWEG@ACCU-SERV.COM
NOTES: DON'T INSTALL IN CEILINGS ABOVE 12' A.F.F. OR CEILINGS 8' A.F.F. OR LOWER

L-10 — PENDANT LIGHT, SALES AREA WORK STATIONS
MANUFACTURER: BESA LIGHTING
DESCRIPTION: COBALT BLUE PENDANT LIGHT
MODEL: IT-1511CM-8NG18 (COBALT BLUE) RIVA II 12Ø V STERN PENDANT W/ 18 WATT GU-24 LAMP INCLUDED
MOUNTING HT: REFERENCE DRAWINGS
G.C. TO PURCHASE FROM:
CONTACT: ACCUSERV SUPPLY, BUDDY BOCKWEG
PHONE: (817) 701-1318
E-MAIL: BBOCKWEG@ACCU-SERV.COM
NOTES: DON'T INSTALL IN CEILINGS ABOVE 12' A.F.F. OR CEILINGS 8' A.F.F. OR LOWER

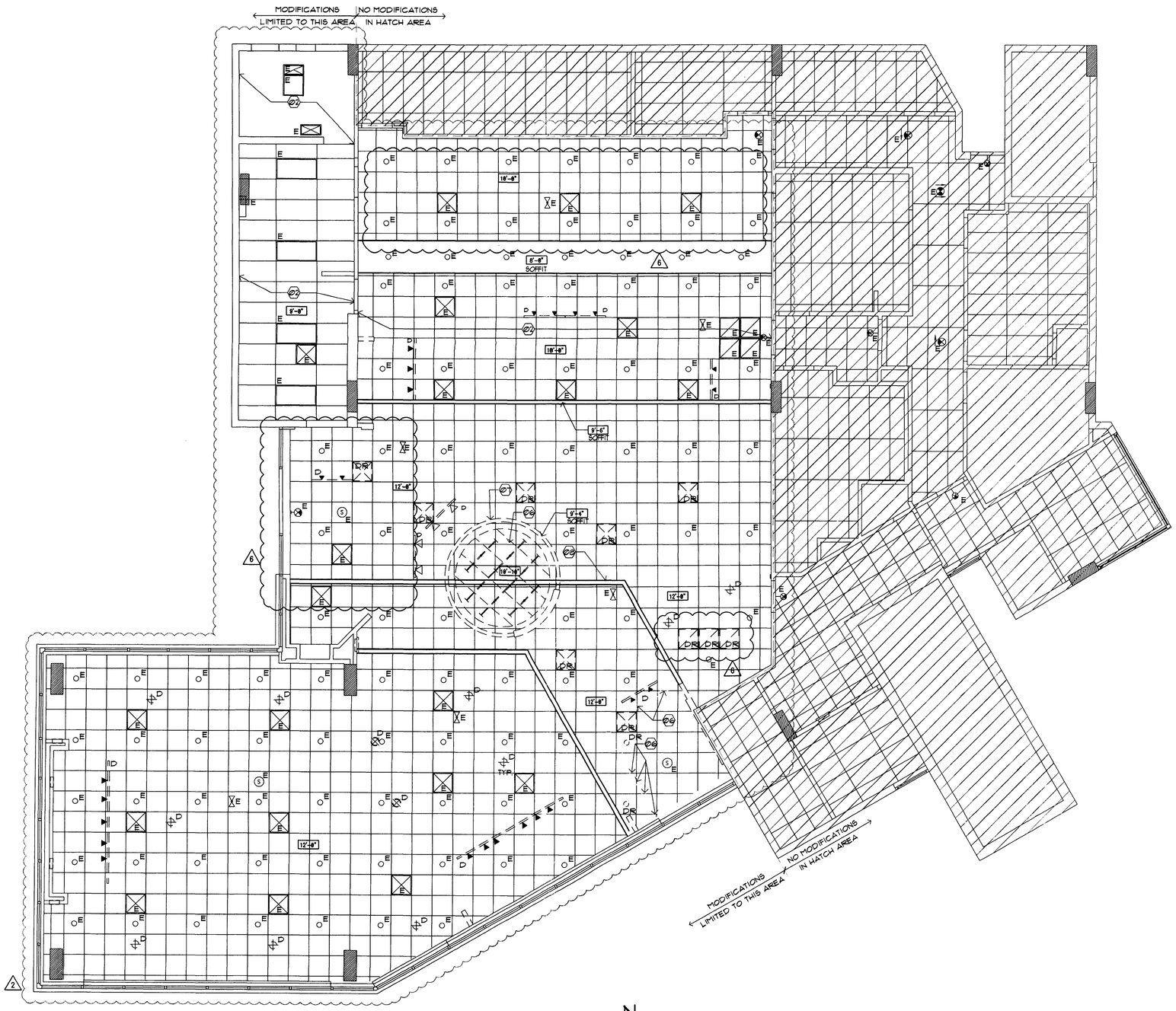

1 DEMOLITION CEILING PLAN

SCALE: 3/16"=1'-0"

N

DEMO RCP GENERAL NOTES

1. NOT ALL NOTES, KEY NOTES OR LEGEND ITEMS MAY APPLY.
2. DIMENSIONS ARE FROM FACE OF FINISH TO FACE OF FINISH U.N.O.
3. ALL NEW SUSPENDED CEILING GRID AND CEILING TILE TO MATCH EXISTING ADJACENT SYSTEM.
4. ALL NEW GYP. BD. CEILING AND INFILL CEILING TO MATCH ADJACENT SURFACE TEXTURE AND FINISH.
5. ELECTRICAL CONTRACTOR TO ENSURE THAT MODIFIED LAYOUT OF LIGHT FIXTURES ARE PLANNED SO ELECTRICAL CAPACITY AND ENERGY USE IS CONSISTENT WITH EXISTING DESIGN.
6. CENTER LIGHT AND MECHANICAL FIXTURES WITHIN CEILING TILE TYPICAL, UNO.
7. MECHANICAL CONTRACTOR TO MOVE EXISTING SUPPLY AND RETURN GRILLS TO AVOID INTERFERENCE WITH ANY NEW WALL OR SOFFIT LOCATIONS. MECHANICAL SYSTEM SHALL BE BALANCED TO ENSURE ANY MINOR ADJUSTMENTS TO THE SYSTEM ALLOW FOR PROPER CONDITIONING OF SPACE.
8. COORDINATE ALL SOFFIT DESIGN AND ACCENT LIGHTING POSITION TO COORDINATE WITH FURNITURE LAYOUT.
9. ALL SECURITY DEVICES INCLUDING CAMERAS, MONITORS, ALARMS, ETC. WILL BE DESIGNED AND INSTALLED BY THE SECURITY COMPANY AND ARE NOT SHOWN ON THESE PLANS, NOR ON THE ELECTRICAL PLANS.
10. CONTRACTOR TO COORDINATE WITH FIRE SPRINKLER & FIRE ALARM DESIGN/BUILD CONTRACTORS TO ENSURE ANY MINOR MODIFICATIONS ARE ALLOWED BY CODE. THESE MINOR MODIFICATIONS ARE ASSUMED TO BE A SLIGHT RAISING, LOWERING OR REPOSITIONING ONLY.
11. REMOVE EXISTING WAMU (FORMER TENANTS') RELATED MARKETING ELEMENTS SUCH AS: CIRCULAR SOFFIT(S), TRACK LIGHTING, SIGNAGE BANNERS AND/OR MARKETING DISPLAYS.
12. TURN OVER ALL EXISTING PENDANT FIXTURES TO PMC FIELD REP.

DEMO RCP SHEET KEY NOTES

01. NOT USED.
02. NO CEILING WORK IN THIS AREA.
03. NOT USED.
04. NOT USED.
05. NOT USED.
06. PORTION OF EXISTING CEILING/ GRID TO BE REMOVED.
07. REMOVE (WAMU RELATED) CIRCULAR SOFFIT & SIGNAGE BANNER(S).
08. PORTION OF EXISTING SOFFIT TO REMAIN. 2

INTERPLAN LLC
ARCHITECTURE
ENGINEERING
INTERIOR DESIGN
PROJECT MANAGEMENT

AA 003420
CA8660

933 LEE ROAD, FIRST FLOOR
ORLANDO, FLORIDA 32810
PH 407.645.5008
FX 407.629.9124

SEAL:

DEC 07 2009

CONSULTANT:

REVISIONS:

NO.	DATE	REMARKS
2	05-09-09	OWNER REVISIONS
6	12-03-09	OWNER REVISIONS

CHASE

INTERIOR REBRANDING CONVERSION
MIAMI BEACH - ALTON ROAD
WAMU BLDG O# 1924 CHASE STORE ID#: 1/1/2
1801 ALTON ROAD
MIAMI, FL 33139

COPYRIGHT © 2009
INTERPLAN LLC RESERVES COPYRIGHT & OTHER RIGHTS RESTRICTING THESE DOCUMENTS TO THE ORIGINAL SITE OR PURPOSE FOR WHICH THEY WERE PREPARED. REPRODUCTIONS, CHANGES OR ASSIGNMENTS ARE PROHIBITED.

PROJECT NO: 2009.0109

DATE: 04-30-09

A1.0A

DEMOLITION CEILING PLAN

DRAWN BY:

CHECKED BY:

LEGEND

GYP. BD. CEILING - NEW
COLOR:
5/8" GYP. BD. SHEATHING

ACT-1
ACOUSTICAL CEILING: ALL AREAS
MANUFACTURER: ARMSTRONG
MODEL: ULTIMA OPEN PLAN BEVELED
COLOR: WHITE
SIZE: 24" x 24" x 3/4"
EDGE: BEVELED TEGULAR
GRID: INTERLUDE XL 9/16" EXPOSED TEE
GRID FINISH: WHITE

ACT-2
ACOUSTICAL CEILING: ALL AREAS
MANUFACTURER: ARMSTRONG
MODEL: ULTIMA OPEN PLAN BEVELED
COLOR: WHITE
SIZE: 24" x 48" x 3/4"
EDGE: BEVELED TEGULAR
GRID: INTERLUDE XL 9/16" EXPOSED TEE
GRID FINISH: WHITE

SLEEVES THRU CEILING FOR DATA CABLES

2'x4' RECESSED LIGHT FIXTURE IN SUSPENDED CEILING SYSTEM,

1 X 4 SURFACE MOUNTED FLUORESCENT LIGHT FIXTURE.

FLUORESCENT STRIP LIGHT FIXTURE.

2'x2' LAY-IN FLUORESCENT

LED CANOPY LIGHT

4"X4" COMPACT FLUORESCENT DOWN LIGHT

4"X4" WALL WASHER

EXIT SIGN (DIRECTIONAL)

EXIT SIGN, LOCATE CENTRALLY OVER DOOR(S)

EMERGENCY LIGHT, MOUNT TO CEILING

EMERGENCY LIGHT, MOUNT TO WALL

BLUE PENDANT LIGHT FIXTURE, ALIGN W/ CENTER OF FIXTURE BELOW. RE: RCP FOR MOUNTING HEIGHT - SEE L-10 SPEC. BELOW.

AMBER PENDANT LIGHT FIXTURE, ALIGN W/ CENTER OF FIXTURE BELOW. RE: RCP FOR MOUNTING HEIGHT - SEE L-9 SPEC. BELOW.

AMBIENT DOWNLIGHT

MONOPOINT SPOTLIGHT

TRACK LIGHT MOUNTED TO BOTTOM OF CEILING

COVE LIGHTING FIXTURE

SURFACE MOUNTED LIGHT FIXTURE

EXHAUST GRILLE

SUPPLY DIFFUSER

RETURN GRILLE

EXHAUST FAN, RE: MECHANICAL

SPEAKER

SPRINKLER HEAD

E = EXISTING TO REMAIN
D = DEMO
DR = DEMO TO BE RELOCATED
R = RELOCATED (NEW LOCATION)
N = NEW

L-9
PENDANT LIGHT, CENTER ON TELLER TRANS. WINDOW
MANUFACTURER: BESA LIGHTING
DESCRIPTION: AMBER PENDANT LIGHT
MODEL: IT-151180-SNG18 (AMBER) RIVA 11 120V STERN PENDANT W/ 18 WATT GU-24 LAMP INCLUDED
MOUNTING HT: REFERENCE DRAWINGS
G.C. TO PURCHASE FROM:
CONTACT: ACCUSERV SUPPLY, BUDDY BOCKWEG
PHONE: (877) 701-7378
E-MAIL: BBOCKWEG@ACCU-SERV.COM
NOTES: DON'T INSTALL IN CEILINGS ABOVE 12' A.F.F. OR CEILINGS 8' A.F.F. OR LOWER

L-10
PENDANT LIGHT, SALES AREA WORK STATIONS
MANUFACTURER: BESA LIGHTING
DESCRIPTION: COBALT BLUE PENDANT LIGHT
MODEL: IT-151ICM-SNG18 (COBALT BLUE) RIVA 11 120V STERN PENDANT W/ 18 WATT GU-24 LAMP INCLUDED
MOUNTING HT: REFERENCE DRAWINGS
G.C. TO PURCHASE FROM:
CONTACT: ACCUSERV SUPPLY, BUDDY BOCKWEG
PHONE: (877) 701-7378
E-MAIL: BBOCKWEG@ACCU-SERV.COM
NOTES: DON'T INSTALL IN CEILINGS ABOVE 12' A.F.F. OR CEILINGS 8' A.F.F. OR LOWER

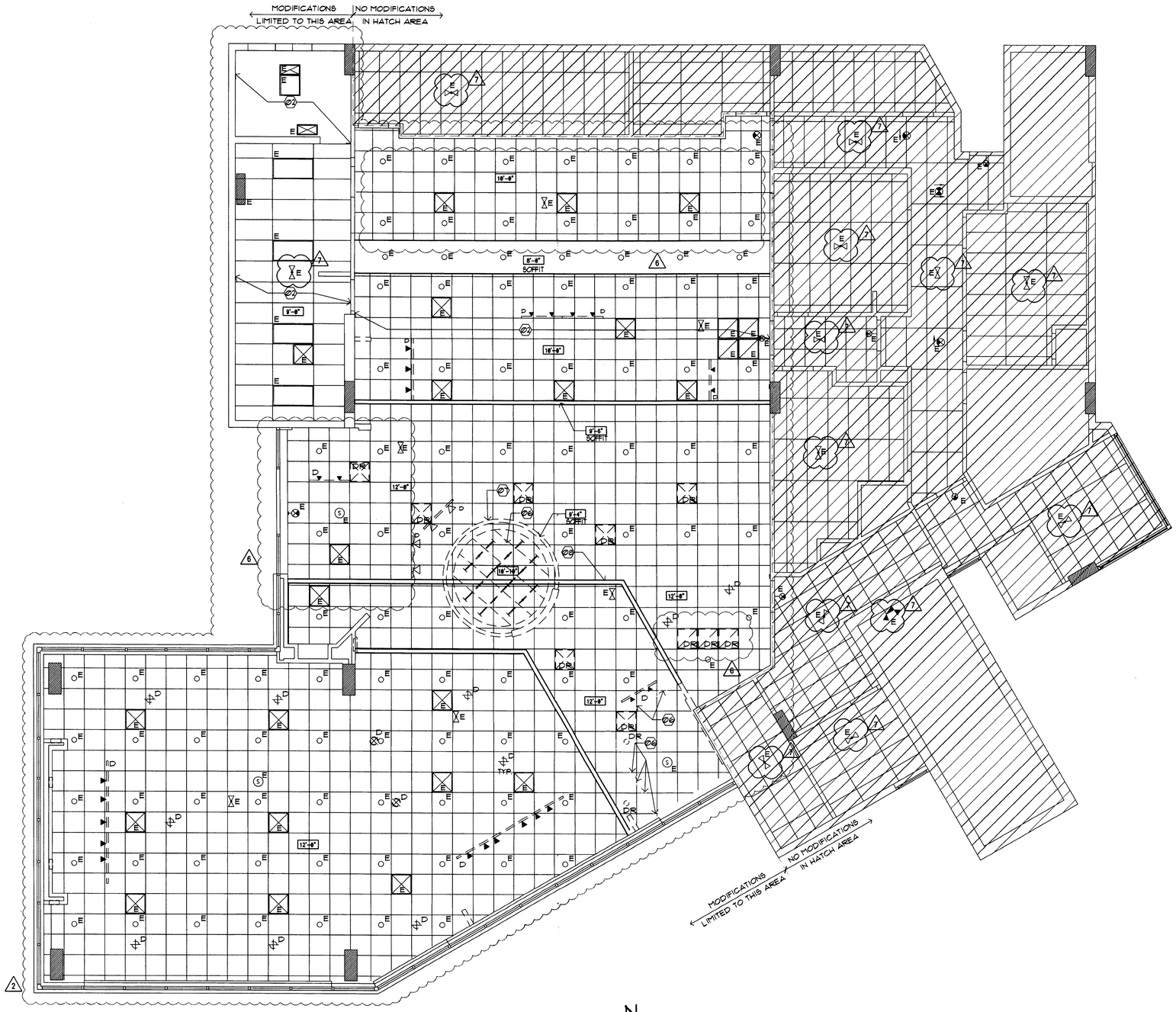

1 DEMOLITION CEILING PLAN

SCALE: 3/16"=1'-0"

N

DEMO RCP GENERAL NOTES

1. NOT ALL NOTES, KEY NOTES OR LEGEND ITEMS MAY APPLY.
2. DIMENSIONS ARE FROM FACE OF FINISH TO FACE OF FINISH U.N.O.
3. ALL NEW SUSPENDED CEILING GRID AND CEILING TILE TO MATCH EXISTING ADJACENT SYSTEM.
4. ALL NEW GYP. BD. CEILING AND INFILL CEILING TO MATCH ADJACENT SURFACE TEXTURE AND FINISH.
5. ELECTRICAL CONTRACTOR TO ENSURE THAT MODIFIED LAYOUT OF LIGHT FIXTURES ARE PLANNED SO ELECTRICAL CAPACITY AND ENERGY USE IS CONSISTENT WITH EXISTING DESIGN.
6. CENTER LIGHT AND MECHANICAL FIXTURES WITHIN CEILING TILE TYPICAL, UNO.
7. MECHANICAL CONTRACTOR TO MOVE EXISTING SUPPLY AND RETURN GRILLS TO AVOID INTERFERENCE WITH ANY NEW WALL OR SOFFIT LOCATIONS. MECHANICAL SYSTEM SHALL BE BALANCED TO ENSURE ANY MINOR ADJUSTMENTS TO THE SYSTEM ALLOW FOR PROPER CONDITIONING OF SPACE.
8. COORDINATE ALL SOFFIT DESIGN AND ACCENT LIGHTING POSITION TO COORDINATE WITH FURNITURE LAYOUT.
9. ALL SECURITY DEVICES INCLUDING CAMERAS, MONITORS, ALARMS, ETC, WILL BE DESIGNED AND INSTALLED BY THE SECURITY COMPANY AND ARE NOT SHOWN ON THESE PLANS, NOR ON THE ELECTRICAL PLANS.
10. CONTRACTOR TO COORDINATE WITH FIRE SPRINKLER & FIRE ALARM DESIGN/BUILD CONTRACTORS TO ENSURE ANY MINOR MODIFICATIONS ARE ALLOWED BY CODE. THESE MINOR MODIFICATIONS ARE ASSUMED TO BE A SLIGHT RAISING, LOWERING OR REPOSITIONING ONLY.
11. REMOVE EXISTING WAMU (FORMER TENANTS') RELATED MARKETING ELEMENTS SUCH AS: CIRCULAR SOFFIT(S), TRACK LIGHTING, SIGNAGE BANNERS AND/OR MARKETING DISPLAYS.
12. TURN OVER ALL EXISTING PENDANT FIXTURES TO PMC FIELD REP.

DEMO RCP SHEET KEY NOTES

01 NOT USED.
02 NO CEILING WORK IN THIS AREA.
03 NOT USED.
04 NOT USED.
05 NOT USED.
06 PORTION OF EXISTING CEILING/ GRID TO BE REMOVED.
07 REMOVE (WAMU RELATED) CIRCULAR SOFFIT & SIGNAGE BANNER(S).
08 PORTION OF EXISTING SOFFIT TO REMAIN. 2

INTERPLAN LLC
ARCHITECTURE
ENGINEERING
INTERIOR DESIGN
PROJECT MANAGEMENT

AA 003420
CAB660

933 LEE ROAD, FIRST FLOOR
ORLANDO, FLORIDA 32810
PH 407.645.5008
FX 407.629.9124

SEAL:
HARVEY JACOBY
MAR 2 2 2010

CONSULTANT:

REVISIONS:

NO.	DATE	REMARKS
2	06-09-09	OWNER REVISIONS
6	12-03-09	OWNER REVISIONS
7	03-22-10	PERMIT COMMENTS

CHASE

INTERIOR REBRANDING CONVERSION
MIAMI BEACH - ALTON ROAD
WAMU BLDG ID# 1924 CHASE STORE ID# 1742
1801 ALTON ROAD
MIAMI, FL 33139

COPYRIGHT © 2007
INTERPLAN LLC RESERVES COPYRIGHT & OTHER RIGHTS RESTRICTING THESE DOCUMENTS TO THE ORIGINAL SITE OR PURPOSE FOR WHICH THEY WERE PREPARED. REPRODUCTIONS, CHANGES OR ASSIGNMENTS ARE PROHIBITED.

PROJECT NO: 2009.0109
DATE: 04-30-09

A1.0A

DEMOLITION CEILING PLAN

DRAWN BY:
CHECKED BY: LAM/HJB

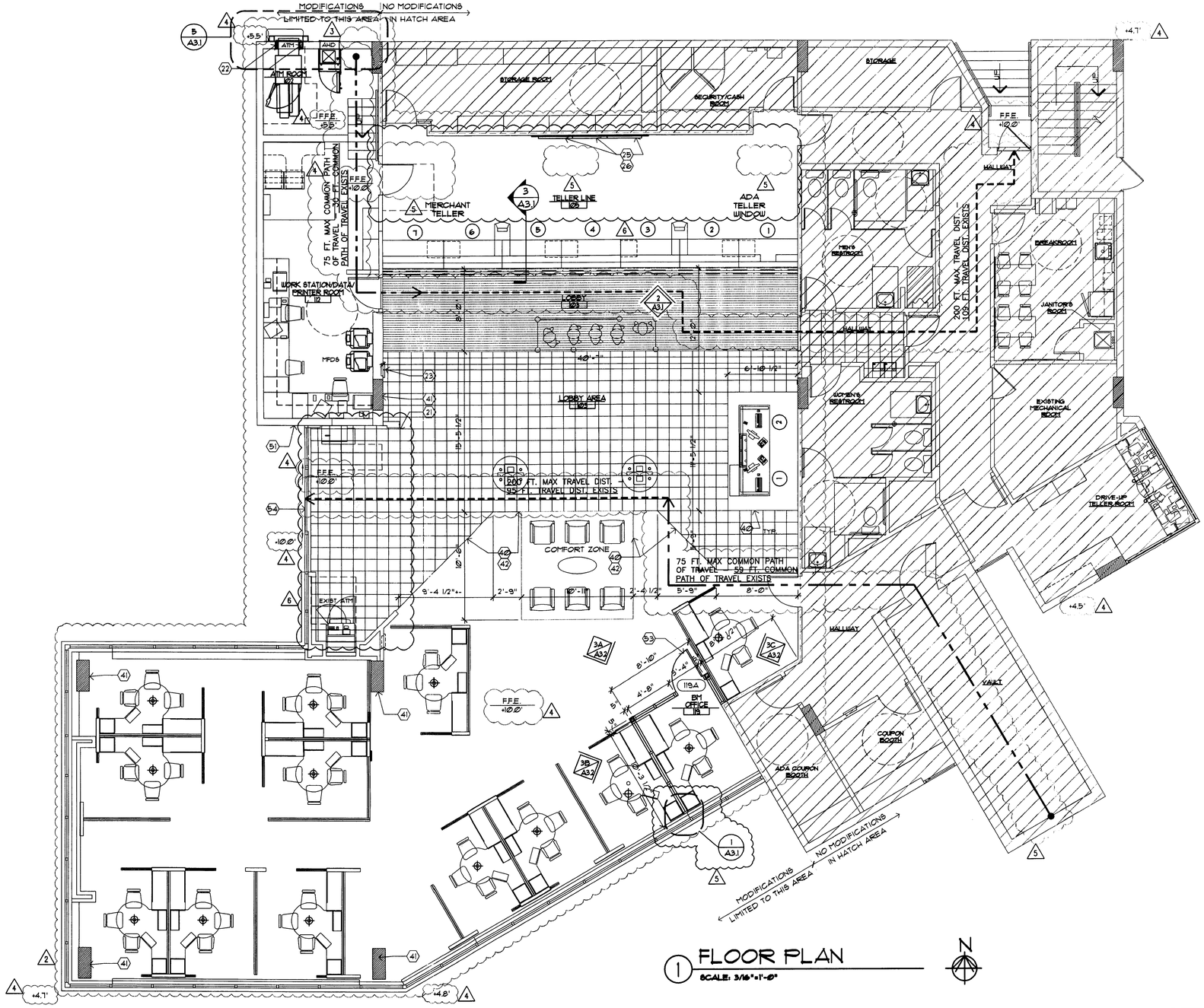

1 FLOOR PLAN

SCALE: 3/16"=1'-0"

N

SYMBOL LEGEND

- (01) SHEET KEY NOTE
- (101A) DOOR SYMBOL (NEW OR MODIFIED)
- (A) WINDOW SYMBOL (NEW OR MODIFIED)
- B.E. BANK EQUIPMENT SUPPLIED AND INSTALLED BY BANK EQUIPMENT CONTRACTOR (N.I.C.)- REQUIRED OPENINGS, ELEC POWER, AND CAULKING BY GENERAL CONTR.
- O.E. OFFICE EQUIPMENT SUPPLIED AND INSTALLED BY CHASE BANK.
- [A] WALL TYPE SYMBOL - SEE SHEET A3.0

ELEVATION SYMBOL

- 2 / A3.1 ELEVATION NUMBER / SHEET NUMBER

FLOOR PLAN GENERAL NOTES

1. DIMENSIONS ARE FROM FACE OF FINISH TO FACE OF FINISH UNLESS OTHERWISE NOTED
2. ALL NEW WALL INFILL AREAS TO MATCH ADJACENT EXISTING WALL IN CONSTRUCTION AND GYP. BD. FINISH
3. DOOR MARK (101A) RE: SHEET A3.0
4. PROVIDE ADEQUATE WOOD BLOCKING AT ANCHORAGE FOR ALL COUNTERTOPS, SHELVING, CABINETS, ETC. ANCHORAGE THROUGH GYP. BD. ONLY IS NOT ACCEPTABLE.
5. PROVIDE FIRE EXTINGUISHERS PER CODE. CONFIRM WITH FIRE DEPARTMENT PRIOR TO INSTALLATION
6. DOOR FRAMES LOCATED 3" FROM ADJACENT FINISHED WALL UNLESS OTHERWISE NOTED (U.N.O.)
7. ENSURE ALL NEW AND OLD WALLS SURROUNDING VESTIBULE EXTEND TO DECK ABOVE (WITH SLIP JOINT DETAILING AT TOP OF WALL).
8. X-RAY CONCRETE SLAB PRIOR TO ANY PENETRATIONS, CUTTING OR REMOVAL OF CONCRETE SLAB TO ENSURE THAT THE STRUCTURAL INTEGRITY SHALL NOT BE COMPROMISED, UNLESS EXISTING STRUCTURAL PLANS CAN BE OBTAINED TO ENSURE SUCH.
9. FURNITURE SHOWN FOR REFERENCE ONLY, RE: FURNITURE PLANS FOR SPECIFIC INFORMATION.
10. NOT ALL NOTES, KEYNOTES AND/OR LEGEND ITEMS APPLY.
11. EXISTING FIRE EXTINGUISHER TO BE RELOCATED PER FIRE DEPARTMENT REQUIREMENTS
12. EXISTING TENANT DEMISING WALL. IF TENANT DEMISING WALL IS DAMAGED DURING CONSTRUCTION OR THE FIRE RATING OF THE WALL IS COMPROMISED, THE CONTRACTOR IS RESPONSIBLE TO REPAIR THE WALL USING MATERIALS REQUIRED TO MAINTAIN THE EXISTING FIRE RATING OF THE WALL.

FLOOR PLAN SHEET KEY NOTES

WALLS

- (20) NEW WALLS & WALL INFILL TO BE CONSTRUCTED OF STUDS TO MATCH EXISTING. GYP. BD. THICKNESS/ TYPE TO MATCH EXISTING GYP. BD., TYP. (5/8" GYP. BD. ASSUMED). FIELD VERIFY.
- (21) ALIGN NEW WALL OR PARTITION WITH FACE OF EXISTING WALL.
- (22) INFILL OPENING IN EXTERIOR WALL WITH MATERIALS TO MATCH EXISTING ADJACENT MATERIALS EXTERIOR AND INTERIOR. ALL INFILL AREAS TO RECEIVE INSULATION, FIRE RATING AND MOISTURE PROTECTION CONSISTENT WITH EXISTING. PROPERLY CAULK AND SEAL ALL PENETRATIONS. 2
- (23) NEW LOCATION FOR EXISTING FIRE EXTINGUISHER OR PER FIRE DEPARTMENT'S DIRECTION.
- (24) NOT USED.
- (25) MARKETING FIXTURE. SEE TELLER LINE ELEVATION.
- (26) PROVIDE PLYWOOD BACKER FOR TV BRACKET INSTALLATION. SEE DETAIL 5/A3.2.
- (27) NOT USED 6

2

FLOORS

- (40) RE: TRANSITION DETAILS FOR APPROPRIATE FLOORING TRANSITION DETAIL, SHEET 2/A1.2
- (41) EXISTING COLUMN TO REMAIN. 2
- (42) PATCH AND REPAIR EXPOSED PORTIONS OF EXISTING FLOOR TO NEW FINISH TO MATCH EXISTING.

OPENINGS

- (50) ADA POWER ASSIST ACTIVATION BUTTON TO REMAIN IF EXISTING. G.C. TO VERIFY OPERATIONAL.
- (51) CARD READER AT EXTERIOR ENTRY DOORS TO REMAIN IF EXISTING. SECURITY VENDOR TO COORDINATE.
- (52) NOT USED 6
- (53) DOOR AND HOLLOW METAL FRAME, RE: ELEVATIONS SHEET A3.0 & SHEET A1.2 FOR COLOR
- (54) G.C. TO PROVIDE NEW TINTING FILM ON EXISTING EXTERIOR DOORS TO MATCH EXISTING WHERE WAMU MERCHANDISING REMOVED. 2
- (55) (NOT USED)

INTERPLAN LLC

ARCHITECTURE
ENGINEERING
INTERIOR DESIGN
PROJECT MANAGEMENT

AA 003420
CA8660

933 LEE ROAD, FIRST FLOOR
ORLANDO, FLORIDA 32810
PH 407.645.5008
FX 407.629.9124

SEAL:

HARVEY JACOBY
DEC 07 2009

CONSULTANT:

REVISIONS:

NO.	DATE	REMARKS
2	06-09-09	OWNER REVISIONS
3	06-30-09	OWNER REVISIONS
4	07-28-09	PERMIT COMMENTS
5	10-05-09	PERMIT COMMENTS
6	12-03-09	OWNER REVISIONS

CHASE

INTERIOR REBRANDING CONVERSION
MIAMI BEACH - ALTON ROAD)
WAMU BLDG ID# 1924 CHASE STORE ID# : /12
1801 ALTON ROAD
MIAMI, FL 33139

COPYRIGHT © 2009
INTERPLAN LLC RESERVES COPYRIGHT & OTHER RIGHTS RESTRICTING THESE DOCUMENTS TO THE ORIGINAL SITE OR PURPOSE FOR WHICH THEY WERE PREPARED. REPRODUCTIONS, CHANGES OR ASSIGNMENTS ARE PROHIBITED.

PROJECT NO: 2009.0109

DATE: 04-30-09

A1.1

FLOOR PLAN

DRAWN BY: MK

CHECKED BY: HJ

CHASE FINISH LEGEND

NEW MILLWORK BY G.C. - SEE DETAILS ON SHEETS A3.0 & A3.2

PT-1 LOCATION: INTERIOR WALLS, DOORS AND FRAMES EXCEPT AS NOTED
MANUFACTURER: BENJAMIN MOORE
COLOR: AC-5 "SPRINGFIELD TAN"
DESCRIPTION: AURA WATERBORNE INTERIOR PAINT, EGGSHELL PAINT 524, SATIN FINISH 526
FINISH: EGGSHELL FOR WALLS, SATIN FOR DOORS AND FRAMES

PT-2 LOCATION: INTERIOR ACCENT WALL BEHIND TELLER LINE
MANUFACTURER: BENJAMIN MOORE
COLOR: TO MATCH SHERWIN WILLIAMS SW-6356 "COPPER MOUNTAIN
DESCRIPTION: AURA WATERBORNE INTERIOR PAINT, EGGSHELL FINISH 524
FINISH: EGGSHELL

PT-4 LOCATION: INTERIOR ACCENT PAINT USED WITH WALL COVERING
MANUFACTURER: BENJAMIN MOORE
COLOR: HC-811 "OLD GLORY" (CHASE ACCENT BLUE)
DESCRIPTION: AURA WATERBORNE INTERIOR PAINT, EGGSHELL PAINT 524
FINISH: EGGSHELL

PT-5 LOCATION: INTERIOR DRYWALL CEILINGS
MANUFACTURER: BENJAMIN MOORE
COLOR: NTRM READY MADE "SUPERWHITE"
DESCRIPTION: AURA WATERBORNE INTERIOR PAINT, EGGSHELL PAINT 524
FINISH: EGGSHELL

PT-7 LOCATION: INTERIOR WALL FINISH (ENTRY VESTIBULE)
MANUFACTURER: BENJAMIN MOORE
COLOR: TO MATCH SHERWIN WILLIAMS SW-7045 (INTELLECTUAL GRAY)
DESCRIPTION: AURA WATERBORNE INTERIOR PAINT, EGGSHELL FINISH 524,
FINISH: EGGSHELL

PT-8 LOCATION: WALLS, DOORS, FRAMES TO MATCH FL-2 PANELS
MANUFACTURER: BENJAMIN MOORE
COLOR: 2098-10 (BARREL BROWN)
DESCRIPTION: AURA WATERBORNE INTERIOR PAINT, EGGSHELL FINISH 524, SATIN FINISH 526
FINISH: EGGSHELL FOR WALLS SATIN FOR DOORS & FRAMES

PT-9 LOCATION:EXISTING CROWN MOLDING (HISTORIC LOCATIONS)
MANUFACTURER: BENJAMIN MOORE
COLOR: NTRM READY MIXED COLORS (WHITE DOVE 1-06)
DESCRIPTION: AURA WATERBORNE INTERIOR PAINT, EGGSHELL FINISH 524,
FINISH: EGGSHELL

WC-1 WALL COVERING: SELECT WALL SURFACES (SEE PLAN)
MANUFACTURE: DL COUCH
PRODUCT NUMBER: CB5P-04
PATTERN+ CUSTOM CHASE SILK SCREEN W/ 48" PATTERN REPEAT

WC-2 WALL COVERING: SOFFIT SURFACES ABOVE TELLER LINES
MANUFACTURE: DL COUCH
PRODUCT NUMBER: CB0R-02
PATTERN+ CUSTOM CHASE SILK SCREEN W/ 24" ROLL= 3 ROW PATTERN REPEAT. ALIGN WALL COVERING WITH BOTTOM OF SOFFIT AND CONTINUE APPLICATION UPWARDS, TRIM AT TOP. NOTE: DO NOT TRIM EVENLY FROM BOTH SIDES

PL-1 HORIZONTAL LAMINATE: MILLWORK WORK SURFACES, HORIZONTAL SURFACES AT TELLER LINE OR CUSTOMER SERVICE CENTER
MANUFACTURE: WILSONART
PRODUCT NUMBER: 4882-38
STYLE: OILED SOAPSTONE
FINISH: TEXTURED

PL-2 WOOD VERTICAL LAMINATE: RETROFIT TELLER LINES, SALES OFFICE WALLS (PRESTIGE LOCATIONS UNLESS EXCEPTION), ENTRY OCTAGON WALLS, B&W SURROUND
MANUFACTURE: WILSONART
PRODUCT NUMBER: 1935-07
STYLE: SHAKER CHERRY
FINISH: TEXTURED
SIZE: SEE REAL ESTATE SPECIFICATIONS

NOTE: INSTALL WITH GRAIN RUNNING VERTICALLY+ RETROFIT LOCATIONS SHOULD MATCH DOMINANT WOOD FINISH EXISTING IN BRANCH+ CONSULT BRAND EXPERIENCE TEAM FOR SIGN OFF ON FINISHES RECOMMENDED OTHER THAN SHAKER CHERRY

WT-1 MOTORIZED WINDOW SHADES
MANUFACTURER: INSIDE OUTFITTERS
MODEL NUMBER: STYLE 3000, V01
COLOR: PALE GREY
SIZE: SEAMLESS UP TO 98" WIDE
OPENNESS FACTOR: 15%

NOTES.•IF BRANCH HAS EXISTING AWNINGS, MUST RECEIVE PRIOR DRC APPROVAL
• VENDOR TO CONDUCT SITE SURVEY FOR ALL NON-NEW BUILD SITES AND PROVIDE RE OR GENERAL CONTRACTOR SURVEY RESULTS INDICATING WHERE TO PLACE POWER
• RE TO PROVIDE APPROPRIATE POWER TO EACH WINDOW ACCORDING TO SITE SURVEY FROM INSIDE OUTFITTERS
• EACH BANK OF WINDOWS WILL BE CONTROLLED BY A BATTERY OPERATED REMOTE CONTROL UNIT THAT WILL BE PLACED IN THE BRANCH MANAGERS OFFICE. (BREAK ROOM SHADES ARE MANUAL)
• SHADES WILL BE PROGRAMMED WITH PRE SET UPPER AND LOWER STOPPING POINTS SO ALL SHADES WILL GO UP AND DOWN AT THE SAME TIME TO THE SAME STOPPING POINT (THE LOWEST SHADE CAN GO 4' FROM THE FLOOR)

WB-1 WALL BASE: TYPICAL ALL WALLS
MANUFACTURER: JOHNSONITE FLOORING
STYLE: "TIGHT LOCK" RESILIENT WALL BASE
COLOR: #40 "BLACK"
COMMENTS: MATCH WALL BASE TO FURNITURE FRAME COLOR VERIFY WITH CHASE PM
SIZE: 4½" SLIM LINE HEIGHT

CPT-1 CARPET: CARPETED AREAS EXCEPT AS NOTED
MANUFACTURER: INTERFACE
NAME: MEDITATIONS
PRODUCT: 1672102500
COLOR: MOCHA 11502
CONSTRUCTION: BROADLOOM / 50 CM TILE
BACKING: GLASBAC
SIZE TILE: 50 CM TILE
NOTE: INSTALL TILES NON-DIRECTIONAL

CPT-2 RECYCLED TIRE TILE, AT ENTRANCE VESTIBULES
MANUFACTURER: MATS, INC.
DESCRIPTION: RECYCLED RUBBER TIRE STRIPS
SIZE: 12" x 12" x 3/8"
(INSTALL IN RUNNING BOND PATTERN NOT QUARTER TURN)

CPT-3 CARPET: FLOATING COMFORT ZONE ONLY
MANUFACTURER: INTERFACE
NAME: TO SCALE
PRODUCT: 1465202500
COLOR: 7164 CONTOUR
CARPET TYPE: 50 CM TILE
BACKING: GLASBAC
INSTALLATION: NON-DIRECTIONAL

CPT-4 TELLER AREA - SAME AS CARPET CPT-1 BUT APPLIED TO INTERFACE'S ANTI-FATIGUE CUSHION (CUSHIONBAC PLUS)
PRODUCT: 1672102504

WD-1 WOOD FLOORING: AT TELLER LINE
MANUFACTURER: GAMMAPAR
WOOD SPECIES: MAPLE
COLOR: CUSTOM WALNUT MEDIUM SPICE
FINISH: PEDESTRIAN URETHANE
SIZE: 4" WIDE X RANDOM LENGTHS (12"-47")
ADHESIVE: NYDREE UP-28
LAY PATTERN PARALLEL TO TELLER LINE

CT-1 CERAMIC TILE: HIGH TRAFFIC TELLER AND ENTRY AREAS
MANUFACTURER: MARAZZI TILE
STYLE: SIERRA MADRE
COLOR: SONORA
GROUT: CUSTOM BUILDING PRODUCTS #101 QUARTZ POLYBLEND SANDED, GROUT WIDTH: 1/8"
SIZE: 18" x 18" x 3/8" TILES
(FOR WAMU ONLY WHEN 75% OR MORE NEEDS REPLACED)

GR-1 WALK OFF GRATE: AT ENTRANCE VESTIBULES
MANUFACTURER: NUWAY
STYLE: REVERSIBLE FOOT GRILLE (CLOSED CONSTRUCTION)
SIZE: 6' x 6' FOR ALL WAMU CONVERSIONS
FINISH: ALUMINUM
FRAME: SCHLUTER
COLOR: CHARCOAL WIPER STRIPS
(INSTALL WITH WIPER STRIPS PARALLEL WITH ENTRANCE DOORS WALL)

WT-2 WINDOW SHEERS
MANUFACTURER: DESIGN TEX
MODEL NUMBER: SILKIS #219/2007161
COLOR: NATURAL
SIZE: 118" NO PATTERN REPEAT
INSTALL: SHEERS TO BE INSTALLED BY VENDOR

NOTES: • IF BRANCH HAS EXTERIOR AWNINGS, MUST RECEIVE PRIOR DRC APPROVAL
• IF BRANCH HAS AN ILLUMINATED INTERIOR SOFFIT INSTALLED IN THE WINDOWS, SHEERS SHOULD BE INSTALLED BEHIND
• SHIP TO A LOCAL DRAPERY FABRICATOR
• DRAPERY SHOULD BE FABRICATED AT A 2 TO 1 FULLNESS, PINCH-PLEATED AND INSTALLED ON A TRAVERSE ROD

PER FFPC 2007, NFPA 101-LIFE SAFETY CODE, SECTION 38.3.3.2.1-2 INTERIOR WALL AND CEILING FINISHES IN BUSINESS OCCUPANCIES STATES
38.3.3.2.1 INTERIOR WALL AND CEILING FINISH MATERIAL COMPLYING WITH SECTION 102 SHALL BE CLASS A OR CLASS B IN EXITS AND IN EXIT ACCESS CORRIDORS.
38.3.3.2.2 INTERIOR WALL AND CEILING FINISHES SHALL BE CLASS A, CLASS B, OR CLASS C IN AREAS OTHER THAN THOSE SPECIFIED IN 38.3.3.2.1
THE GC SHALL CONSIDER THESE FINISH CLASSES AS MINIMUM REQUIREMENTS WHEN PROVIDING NEW FINISHES.

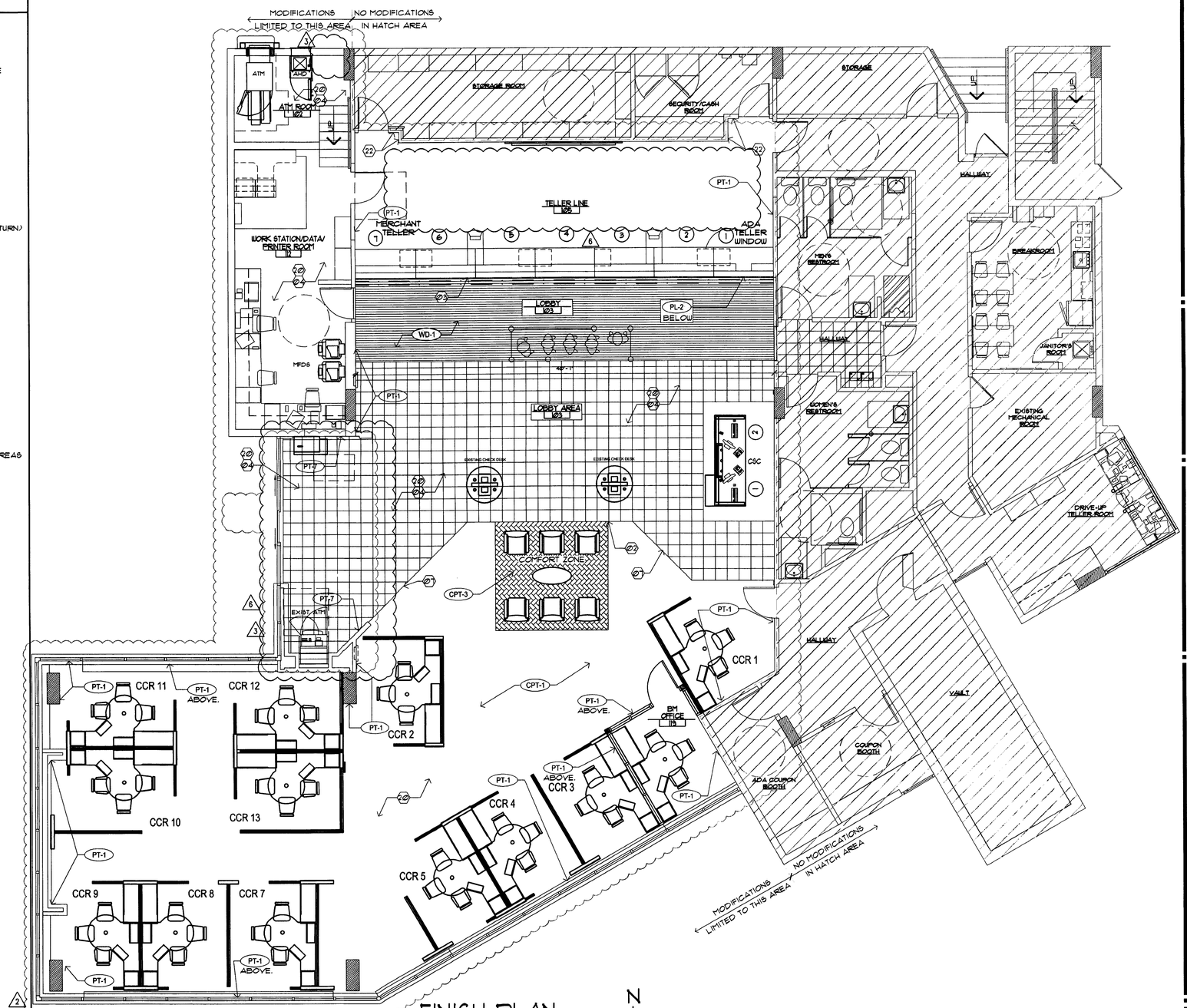

1 FINISH PLAN
SCALE: 3/16"=1'-0"

SYMBOL LEGEND

- (#) SHEET KEY NOTE
- (101A) DOOR SYMBOL (NEW OR MODIFIED)
- (A) WINDOW SYMBOL (NEW OR MODIFIED)
- B.E. BANK EQUIPMENT SUPPLIED AND INSTALLED BY BANK EQUIPMENT CONTRACTOR (N.I.C.)- REQUIRED OPENINGS, ELEC POWER, AND CAULKING BY GENERAL CONTR.
- O.E. OFFICE EQUIPMENT SUPPLIED AND INSTALLED BY CHASE BANK.

FINISH GENERAL NOTES

1. EXISTING FINISHES SCHEDULED TO REMAIN SHALL BE PROTECTED DURING CONSTRUCTION
2. POSITION COMFORT ZONE AT TILE GROUT LINES.
3. NOT USED.
4. CONTRACTOR TO FEATHER FLOOR SURFACE AT TRANSITION OF FLOOR MATERIALS DIFFERING IN THICKNESS TO ELIMINATE TOE TRIP.
5. NEW PAINT TO EXTEND FULL SURFACE STOPPING ONLY AT CHANGE OF MATERIALS AND OR CORNERS
6. NEW WOOD FLOORING AT TELLER AREA TO EXTEND FULL LENGTH OF TELLER COUNTER
7. MATCH EXISTING TRANSITIONS WHERE MATCHING EXISTING FLOORING.
8. PAINT AND WALLCOVERING TO MATCH CHASE STANDARDS.
9. PATCH AND REPAIR EXPOSED PORTIONS OF EXISTING FLOOR TO RECEIVE NEW FINISH.
10. PROPERLY CLEAN SUBSTRATE TO RECEIVE NEW FINISHES

FINISH KEY NOTES

FLOOR

- 01 ALIGN FLOOR MATERIAL EDGE WITH WALL.
- 02 ALIGN COMFORT ZONE WITH GROUT LINES.
- 03 WOOD FLOORING TO EXTEND 1" BACK FROM OUTER EDGE OF TELLER LINE COUNTER PER DETAIL 3/A3.1
- 04 EXISTING FLOORING TO REMAIN AS IS. (2)
- 05 NOT USED.
- 06 NOT USED.
- 07 EXISTING FLOORING TO BE PATCHED/ INFILLED TO MATCH EXISTING AS REQUIRED.
- 08 FEATHER CONCRETE FLOOR AS REQUIRED FOR LEVEL TRANSITION BETWEEN WALK-OFF GRATE (GR-1) AND RECYCLED RUBBER TILE (CPT-2). (3)

WALL

- 20 EXISTING WALL/ BASE FINISH TO REMAIN.
- 21 NOT USED.
- 22 PAINT THIS WALL ONLY, CORNER TO CORNER, WITH PT-1.
- 23 PAINT/ TOUCH-UP WALL FINISH TO MATCH EXISTING AS REQUIRED. INFILL EXISTING BASE AS REQUIRED TO MATCH EXISTING. (2)

(2)

INTERPLAN LLC
ARCHITECTURE
ENGINEERING
INTERIOR DESIGN
PROJECT MANAGEMENT

AA 003420
CA8660

933 LEE ROAD, FIRST FLOOR
ORLANDO, FLORIDA 32810
PH 407.645.5008
FX 407.629.9124

SEAL:
HARVEY JACOBY
DEC 7 2009

CONSULTANT:

REVISIONS:

NO.	DATE	REMARKS
2	06-09-09	OWNER REVISIONS
3	06-30-09	OWNER REVISIONS
6	12-03-09	OWNER REVISIONS

CHASE

INTERIOR REBRANDING CONVERSION
MIAMI BEACH - ALTON ROAD
WAMU BLDG ID# 1924 CHASE STORE ID# 7142
1801 ALTON ROAD
MIAMI, FL 33139

COPYRIGHT © 2009
INTERPLAN LLC RESERVES COPYRIGHT & OTHER RIGHTS RESTRICTING THESE DOCUMENTS TO THE ORIGINAL SITE OR PURPOSE FOR WHICH THEY WERE PREPARED. REPRODUCTIONS, CHANGES OR ASSIGNMENTS ARE PROHIBITED.

PROJECT NO: 2009.0109
DATE: 04-30-09

A1.2
FINISH PLAN

DRAWN BY:
CHECKED BY:

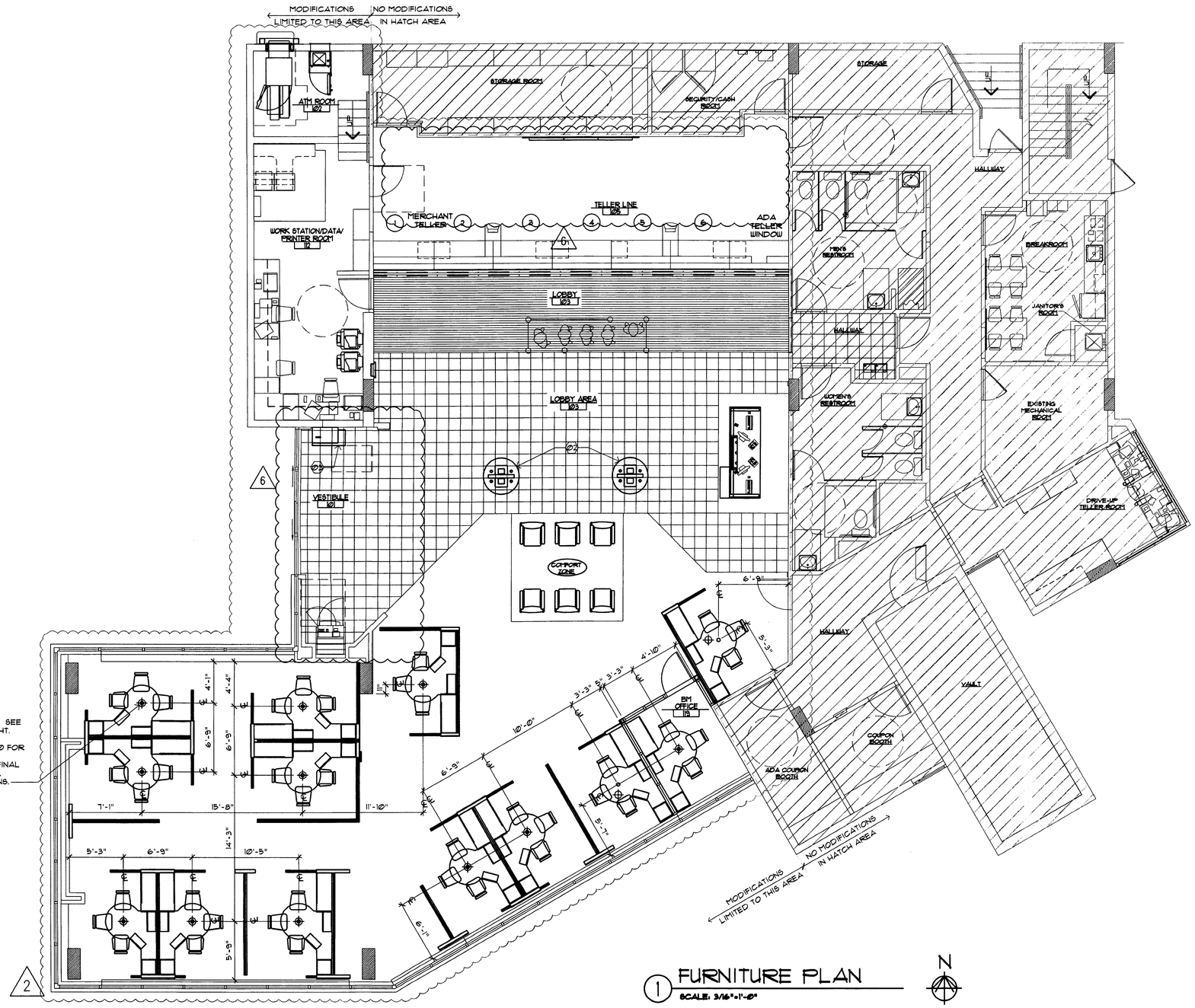

1 FURNITURE PLAN

SCALE: 3/16"=1'-0"

SYMBOL LEGEND

- (01) SHEET KEY NOTE
- (101A) DOOR SYMBOL (NEW OR MODIFIED)
- (A) WINDOW SYMBOL (NEW OR MODIFIED)
- B.E. BANK EQUIPMENT SUPPLIED AND INSTALLED BY BANK EQUIPMENT CONTRACTOR (N.I.C.)- REQUIRED OPENINGS, ELEC POWER, AND CAULKING BY GENERAL CONTR.
- O.E. OFFICE EQUIPMENT SUPPLIED AND INSTALLED BY CHASE BANK.

FURNITURE GENERAL NOTES

1. FURNITURE AND PANEL VENDORS ARE RESPONSIBLE FOR INVENTORY OF EXISTING AND TAGGING OF NEW FURNITURE AND PANELS AS SHOWN ON PLAN.
2. FURNITURE VENDOR IS COORDINATED BY FMC
3. PANEL VENDOR IS COORDINATED BY FMC
4. FURNITURE AND PANEL VENDORS SHALL PROVIDE PRODUCT TAGGING AND INFO REGARDING REUSE OF ANY EXISTING PRODUCT.
5. FURNITURE AND PANELS TO BE INSTALLED TO ALLOW APPROPRIATE ADA ACCESS AND CLEARANCES.
6. FURNITURE PLAN IS PROVIDED FOR INFORMATIONAL PURPOSES ONLY, ACTUAL FURNITURE AND PANEL VENDOR PLANS SHALL GOVERN.
7. EXISTING WAMU END MERCHANDISING AT WORKSTATIONS TO BE REMOVED AND HOLES PLUGGED BY FURNITURE VENDOR, TYPICAL.

FURNITURE KEY NOTES

FLOOR PLAN

- (01) NOT USED
- (02) RELOCATED CHECK DESK.
- (03) NEW CHECK DESK.

2

INTERPLAN LLC

ARCHITECTURE
ENGINEERING
INTERIOR DESIGN
PROJECT MANAGEMENT

AA 003420
CA8660

933 LEE ROAD, FIRST FLOOR
ORLANDO, FLORIDA 32810
PH 407.645.5008
FX 407.629.9124

SEAL:

HARVEY MOODY
DEC 07 2009

CONSULTANT:

REVISIONS:

NO.	DATE	REMARKS
2	06-09-09	OWNER REVISIONS
6	12-03-09	OWNER REVISIONS

CHASE

INTERIOR REBRANDING CONVERSION
MIAMI BEACH - ALTON ROAD
WAMU BLDG ID# 1924 CHASE STORE ID# 1742
1801 ALTON ROAD
MIAMI, FL 33139

COPYRIGHT © 2009 INTERPLAN LLC RESERVES COPYRIGHT & OTHER RIGHTS RESTRICTING THESE DOCUMENTS TO THE ORIGINAL SITE OR PURPOSE FOR WHICH THEY WERE PREPARED. REPRODUCTIONS, CHANGES OR ASSIGNMENTS ARE PROHIBITED.

PROJECT NO: 2009.0109

DATE: 04-30-09

A1.3

FURNITURE PLAN

DRAWN BY:

CHECKED BY:

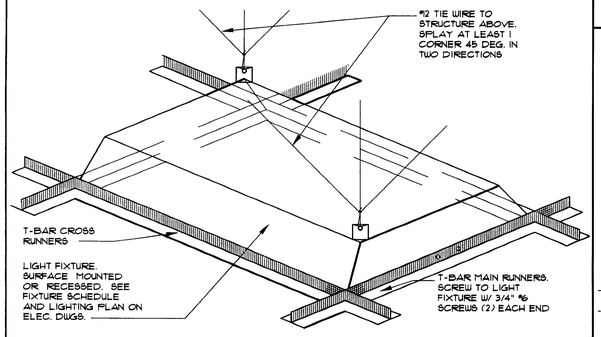

5 HANGER WIRE DETAIL
SCALE: NTS

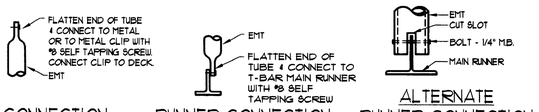

4 CONNECTION DETAILS
SCALE: NTS

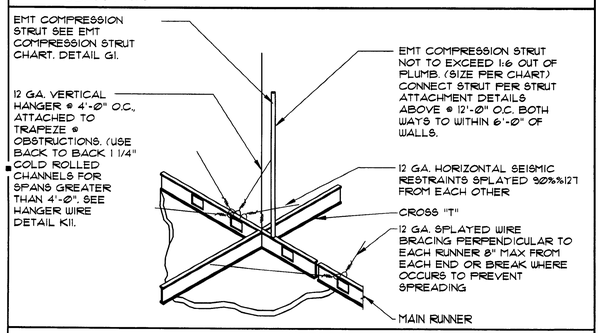

3 HANGER WIRE DETAIL
SCALE: NTS

2 NOT USED
SCALE: NTS

LEGEND

- GYP. BD., CEILING - NEW COLOR: 5/8" GYP. BD. SHEATHING
- ACT-1 — ACOUSTICAL CEILING: ALL AREAS MANUFACTURER: ARMSTRONG MODEL: ULTIMA OPEN PLAN BEVELED COLOR: WHITE SIZE: 24" x 24" x 3/4" EDGE: BEVELED TEGULAR GRID: INTERLUDE XL 9/16" EXPOSED TEE GRID FINISH: WHITE NOTE: TYP. IS TO MATCH EXISTING (USE IF MORE THAN 50% BEING REPLACED)
- ACT-2 — ACOUSTICAL CEILING: ALL AREAS MANUFACTURER: ARMSTRONG MODEL: ULTIMA OPEN PLAN BEVELED COLOR: WHITE SIZE: 24" x 48" x 3/4" EDGE: BEVELED TEGULAR GRID: INTERLUDE XL 9/16" EXPOSED TEE GRID FINISH: WHITE NOTE: TYP. IS TO MATCH EXISTING (USE IF MORE THAN 50% BEING REPLACED)
- SLEEVES THRU CEILING FOR DATA CABLES
- 2'x4' RECESSED LIGHT FIXTURE IN SUSPENDED CEILING SYSTEM,
- 1 X 4 SURFACE MOUNTED FLUORESCENT LIGHT FIXTURE.
- FLUORESCENT STRIP LIGHT FIXTURE.
- 2'x2' LAY-IN FLUORESCENT
- LED CANOPY LIGHT
- 4"X4" COMPACT FLUORESCENT DOWN LIGHT
- 4"X4" WALL WASHER
- EXIT SIGN (DIRECTIONAL)
- EXIT SIGN, LOCATE CENTRALLY OVER DOOR(S)
- EMERGENCY LIGHT, MOUNT TO CEILING
- BLUE PENDANT LIGHT FIXTURE, ALIGN W/ CENTER OF FIXTURE BELOW. RE: RCP FOR MOUNTING HEIGHT - SEE L-10 SPEC. BELOW.
- AMBER PENDANT LIGHT FIXTURE, ALIGN W/ CENTER OF FIXTURE BELOW. RE: RCP FOR MOUNTING HEIGHT - SEE L-9 SPEC. BELOW.
- AMBIENT DOWNLIGHT
- MONOPOINT SPOTLIGHT
- TRACK LIGHT MOUNTED TO BOTTOM OF CEILING
- COVE LIGHTING FIXTURE
- SURFACE MOUNTED LIGHT FIXTURE
- EXHAUST GRILLE
- SUPPLY DIFFUSER
- RETURN GRILLE
- EXHAUST FAN, RE: MECHANICAL
- SP — SPEAKER
- SPRINKLER HEAD
- E = EXISTING TO REMAIN
- D = DEMO
- DR = DEMO TO BE RELOCATED
- R = RELOCATED (NEW LOCATION)
- N = NEW

L-9 — PENDANT LIGHT, CENTER ON TELLER TRANS. WINDOW MANUFACTURER: BESA LIGHTING DESCRIPTION: AMBER PENDANT LIGHT MODEL: IT-1511B0-8NG18 (AMBER) RIVA II 120V STERN PENDANT W/ 18 WATT GU-24 LAMP INCLUDED MOUNTING HT: REFERENCE DRAWINGS G.C. TO PURCHASE FROM: CONTACT: ACCUSERV SUPPLY, BUDDY BOCKWEG PHONE: (877) 701-7378 E-MAIL: BBOCKWEG@ACCU-SERV.COM NOTES: DON'T INSTALL IN CEILINGS ABOVE 12' A.F.F. OR CEILINGS 8' A.F.F. OR LOWER

L-10 — PENDANT LIGHT, SALES AREA WORK STATIONS MANUFACTURER: BESA LIGHTING DESCRIPTION: COBALT BLUE PENDANT LIGHT MODEL: IT-1511CM-8NG18 (COBALT BLUE) RIVA II 120V STERN PENDANT W/ 18 WATT GU-24 LAMP INCLUDED MOUNTING HT: REFERENCE DRAWINGS G.C. TO PURCHASE FROM: CONTACT: ACCUSERV SUPPLY, BUDDY BOCKWEG PHONE: (877) 701-7378 E-MAIL: BBOCKWEG@ACCU-SERV.COM NOTES: DON'T INSTALL IN CEILINGS ABOVE 12' A.F.F. OR CEILINGS 8' A.F.F. OR LOWER

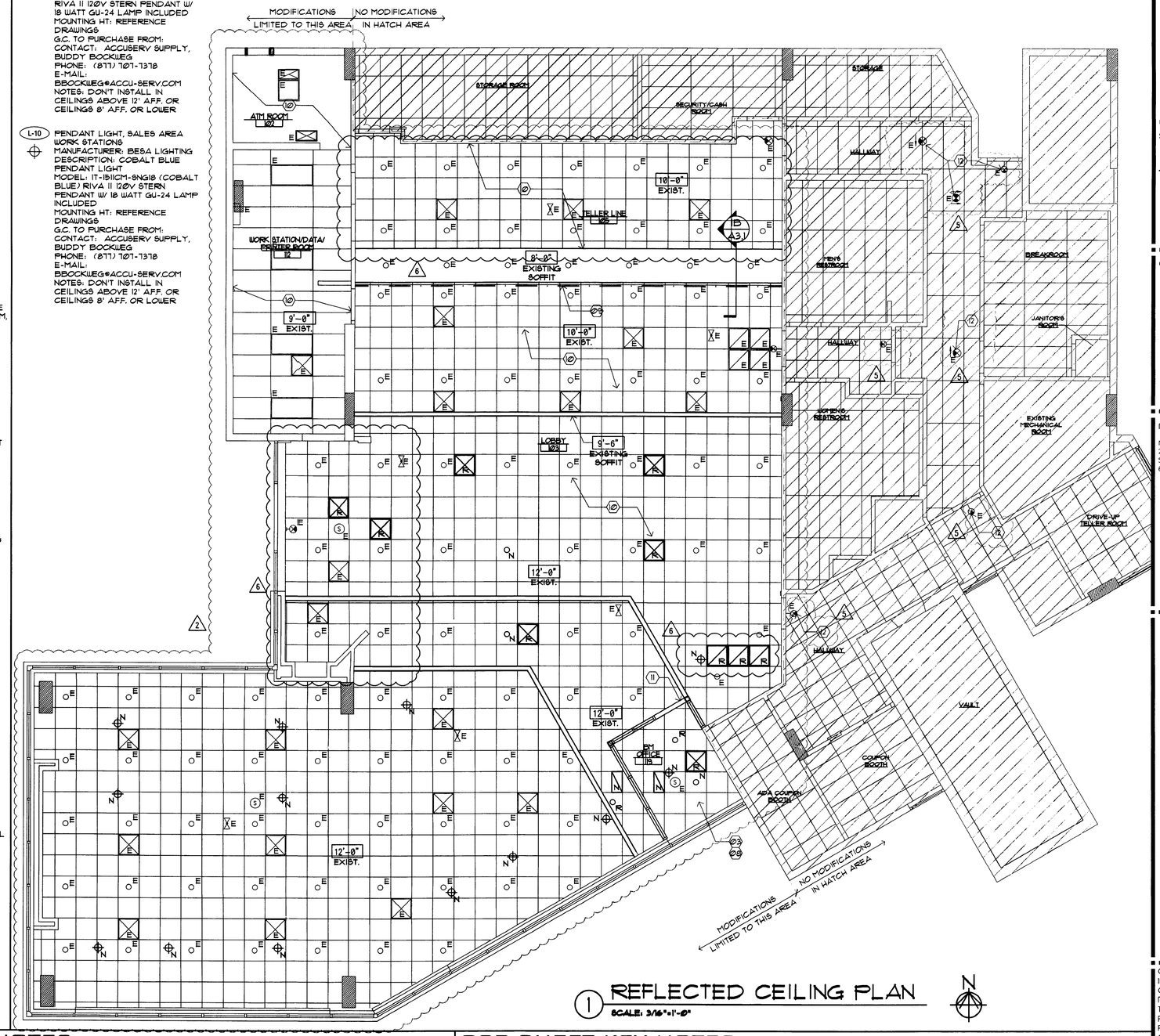

1 REFLECTED CEILING PLAN
SCALE: 3/16"=1'-0"

RCP GENERAL NOTES

1. NOT ALL NOTES, KEYNOTES OR LEGEND ITEMS MAY APPLY.
2. DIMENSIONS ARE FROM FACE OF FINISH TO FACE OF FINISH U.N.O.
3. ALL NEW SUSPENDED CEILING GRID AND CEILING TILE TO MATCH EXISTING ADJACENT SYSTEM.
4. ALL NEW GYP. BD. CEILING AND INFILL CEILING TO MATCH ADJACENT SURFACE TEXTURE AND FINISH.
5. ELECTRICAL CONTRACTOR TO ENSURE THAT MODIFIED LAYOUT OF LIGHT FIXTURES ARE PLANNED SO ELECTRICAL CAPACITY AND ENERGY USE IS CONSISTENT WITH EXISTING DESIGN.
6. CENTER LIGHT AND MECHANICAL FIXTURES WITHIN CEILING TILE TYPICAL, UNO.
7. MECHANICAL CONTRACTOR TO MOVE EXISTING SUPPLY AND RETURN GRILLS TO AVOID INTERFERENCE WITH ANY NEW WALL OR SOFFIT LOCATIONS. MECHANICAL SYSTEM SHALL BE BALANCED TO ENSURE ANY MINOR ADJUSTMENTS TO THE SYSTEM ALLOW FOR PROPER CONDITIONING OF SPACE.
8. ALL SOFFIT DESIGN AND ACCENT LIGHTING POSITIONS TO COORDINATE WITH FURNITURE LAYOUT. SEE SHEET A1.3 AND 4/A3.1.
9. ALL SECURITY DEVICES INCLUDING CAMERAS, MONITORS, ALARMS, ETC, WILL BE DESIGNED AND INSTALLED BY THE SECURITY COMPANY AND ARE NOT SHOWN ON THESE PLANS, NOR ON THE ELECTRICAL PLANS.
10. CONTRACTOR TO COORDINATE WITH FIRE SPRINKLER & FIRE ALARM DESIGN/BUILD CONTRACTORS TO ENSURE ANY MINOR MODIFICATIONS ARE ALLOWED BY CODE. THESE MINOR MODIFICATIONS ARE ASSUMED TO BE A SLIGHT RAISING, LOWERING OR REPOSITIONING ONLY.
11. REPLACE ALL DAMAGED/ DISCOLORED/ DIRTY TILE AND GRID, TYPICAL.

RCP SHEET KEY NOTES

01. NOT USED.
02. SUSPENDED METAL GRID SYSTEM W/ 24"x48" ACOUSTICAL LAY IN TILES, CENTER IN SPACE.
03. 2X2 ACT THIS AREA. FULL CEILING HEIGHT AS CLOSE TO STRUCTURE & HVAC AS POSSIBLE.
04. 5/8" GYP BD. CEILING. PROVIDE MR GYP. BD. AT WET AREAS.
05. NOT USED. (2)
06. NOT USED.
07. NOT USED.
08. INFILL EXISTING CEILING GRID/ TILE AS REQUIRED IN THIS AREA.
09. NEW SIGNAGE BY OTHERS. (2)
10. NO CEILING WORK IN THIS AREA. (2)
11. PROVIDE NEW HEADER AT 7'-0".
12. EXISTING EXIT LIGHT LOCATION. GC TO FIELD VERIFY IF EXISTING LIGHT EXISTS. IF LIGHT DOES NOT EXIST, INSTALL AS LOCATED OR AS DIRECTED BY FIRE MARSHAL.
13. NOT USED. (5)
14. NOT USED.

INTERPLAN LLC
ARCHITECTURE
ENGINEERING
INTERIOR DESIGN
PROJECT MANAGEMENT

AA 003420
CA8660

933 LEE ROAD, FIRST FLOOR
ORLANDO, FLORIDA 32810
PH 407.645.5008
FX 407.629.9124

SEAL:

DEC 07 2009

CONSULTANT:

REVISIONS:

NO.	DATE	REMARKS
2	06-09-09	OWNER REVISIONS
5	10-05-09	PERMIT COMMENTS
6	12-03-09	OWNER REVISIONS

CHASE

INTERIOR REBRANDING CONVERSION
MIAMI BEACH - ALTON ROAD
WAMU BLDG ID# 1924 CHASE STORE ID# 17-12
1801 ALTON ROAD
MIAMI, FL 33139

COPYRIGHT © 2009
INTERPLAN LLC RESERVES COPYRIGHT & OTHER RIGHTS RESTRICTING THESE DOCUMENTS TO THE ORIGINAL SITE OR PURPOSE FOR WHICH THEY WERE PREPARED. REPRODUCTIONS, CHANGES OR ASSIGNMENTS ARE PROHIBITED.

PROJECT NO: 2009.0109

DATE: 04-30-09

A2.0

REFLECTED CEILING PLAN

DRAWN BY:

CHECKED BY:

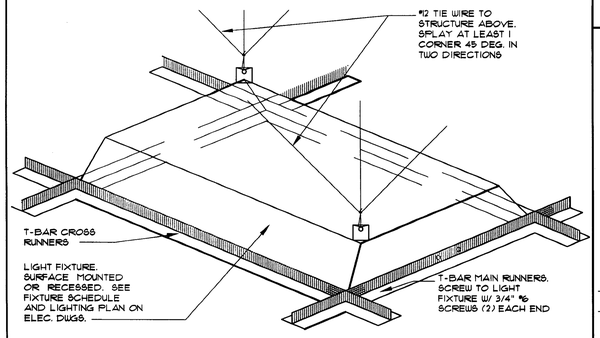

5 HANGER WIRE DETAIL
SCALE: NTS

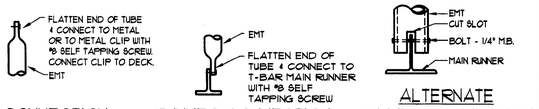

4 CONNECTION DETAILS
SCALE: NTS

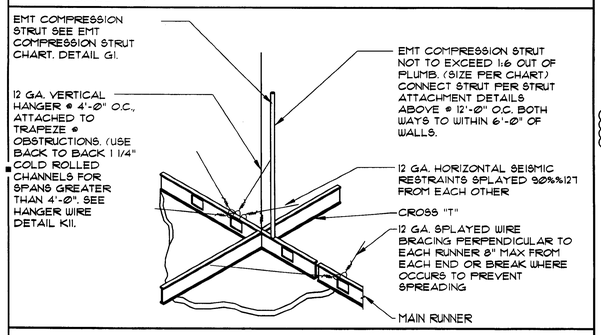

3 HANGER WIRE DETAIL
SCALE: NTS

2 NOT USED
SCALE: NTS

LEGEND

- GYP. BD. CEILING - NEW COLOR: 5/8" GYP. BD. SHEATHING
- ACT-1 — ACOUSTICAL CEILING: ALL AREAS MANUFACTURER: ARMSTRONG MODEL: ULTIMA OPEN PLAN BEVELED COLOR: WHITE SIZE: 24" x 24" x 3/4" EDGE: BEVELED TEGULAR GRID: INTERLUDE XL 9/16" EXPOSED TEE GRID FINISH: WHITE NOTE: TYP. IS TO MATCH EXISTING (USE IF MORE THAN 50% BEING REPLACED)
- ACT-2 — ACOUSTICAL CEILING: ALL AREAS MANUFACTURER: ARMSTRONG MODEL: ULTIMA OPEN PLAN BEVELED COLOR: WHITE SIZE: 24" x 48" x 3/4" EDGE: BEVELED TEGULAR GRID: INTERLUDE XL 9/16" EXPOSED TEE GRID FINISH: WHITE NOTE: TYP. IS TO MATCH EXISTING (USE IF MORE THAN 50% BEING REPLACED)
- SLEEVES THRU CEILING FOR DATA CABLES
- 2'x4' RECESSED LIGHT FIXTURE IN SUSPENDED CEILING SYSTEM.
- 1 X 4 SURFACE MOUNTED FLUORESCENT LIGHT FIXTURE.
- FLUORESCENT STRIP LIGHT FIXTURE.
- 2'x2' LAY-IN FLUORESCENT
- LED CANOPY LIGHT
- 4"X4" COMPACT FLUORESCENT DOWN LIGHT
- 4"X4" WALL WASHER
- EXIT SIGN (DIRECTIONAL)
- EXIT SIGN, LOCATE CENTRALLY OVER DOOR(S)
- EMERGENCY LIGHT, MOUNT TO CEILING
- EMERGENCY LIGHT, MOUNT TO WALL
- BLUE PENDANT LIGHT FIXTURE, ALIGN W/ CENTER OF FIXTURE BELOW. RE: RCP FOR MOUNTING HEIGHT - SEE L-10 SPEC. BELOW.
- AMBER PENDANT LIGHT FIXTURE, ALIGN W/ CENTER OF FIXTURE BELOW. RE: RCP FOR MOUNTING HEIGHT - SEE L-9 SPEC. BELOW.
- AMBIENT DOWNLIGHT
- MONOPOINT SPOTLIGHT
- TRACK LIGHT MOUNTED TO BOTTOM OF CEILING
- COVE LIGHTING FIXTURE
- SURFACE MOUNTED LIGHT FIXTURE
- EXHAUST GRILLE
- SUPPLY DIFFUSER
- RETURN GRILLE
- EXHAUST FAN, RE: MECHANICAL
- SP — SPEAKER
- SPRINKLER HEAD
- E = EXISTING TO REMAIN
- D = DEMO
- DR = DEMO TO BE RELOCATED
- R = RELOCATED (NEW LOCATION)
- N = NEW

L-9 — PENDANT LIGHT, CENTER ON TELLER TRANS. WINDOW. MANUFACTURER: BESA LIGHTING DESCRIPTION: AMBER PENDANT LIGHT MODEL: IT-1511B0-SNG18 (AMBER) RIVA II 120V STERN PENDANT W/ 18 WATT GU-24 LAMP INCLUDED MOUNTING HT: REFERENCE DRAWINGS G.C. TO PURCHASE FROM: CONTACT: ACCUSERV SUPPLY, BUDDY BOCKWEG PHONE: (877) 707-7378 E-MAIL: BBOCKWEG@ACCU-SERV.COM NOTES: DON'T INSTALL IN CEILINGS ABOVE 12' A.F.F. OR CEILINGS 8' A.F.F. OR LOWER

L-10 — PENDANT LIGHT, SALES AREA WORK STATIONS MANUFACTURER: BESA LIGHTING DESCRIPTION: COBALT BLUE PENDANT LIGHT MODEL: IT-1511CM-SNG18 (COBALT BLUE) RIVA II 120V STERN PENDANT W/ 18 WATT GU-24 LAMP INCLUDED MOUNTING HT: REFERENCE DRAWINGS G.C. TO PURCHASE FROM: CONTACT: ACCUSERV SUPPLY, BUDDY BOCKWEG PHONE: (877) 707-7378 E-MAIL: BBOCKWEG@ACCU-SERV.COM NOTES: DON'T INSTALL IN CEILINGS ABOVE 12' A.F.F. OR CEILINGS 8' A.F.F. OR LOWER

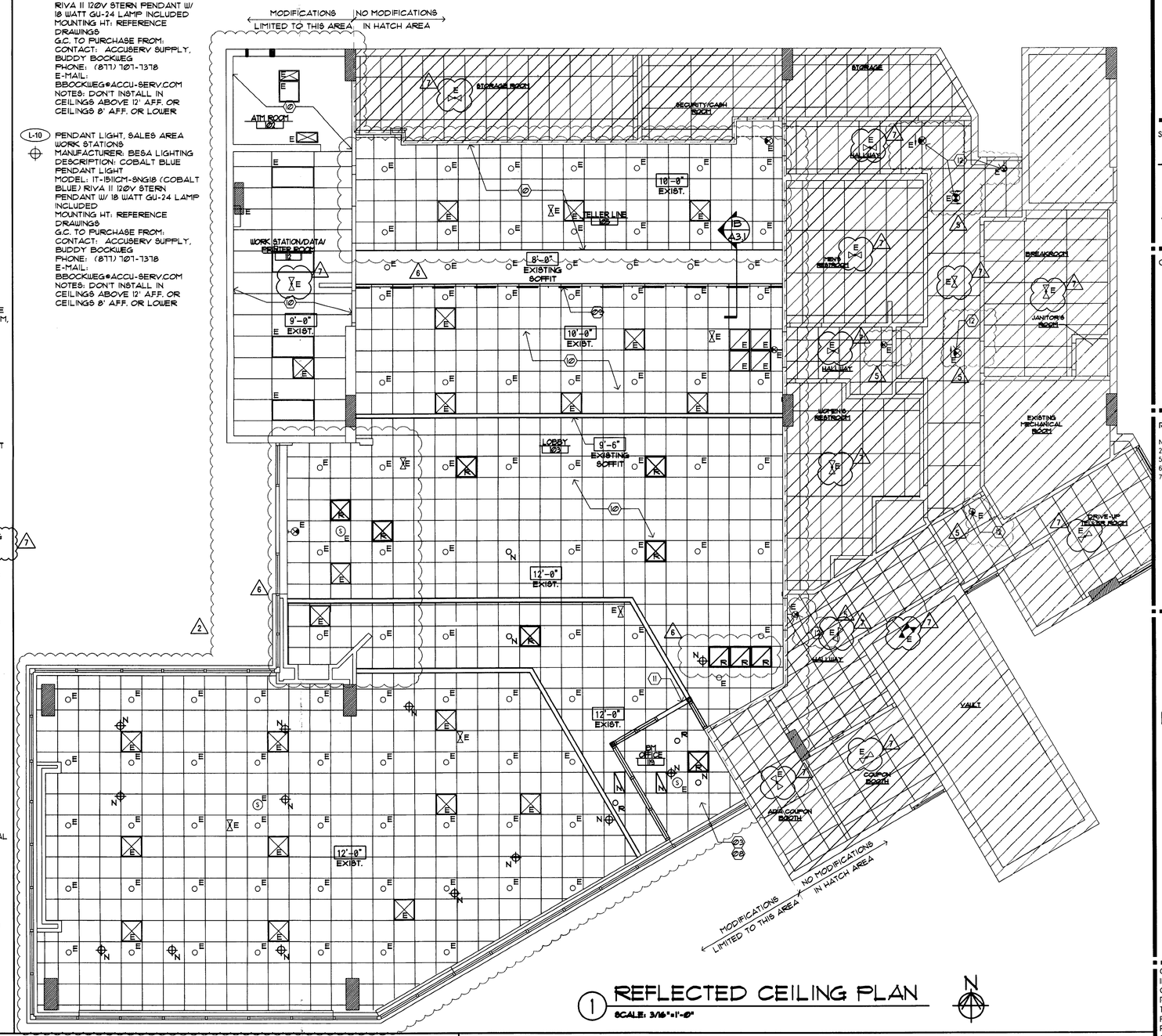

1 REFLECTED CEILING PLAN
SCALE: 3/16"=1'-0"

N

RCP GENERAL NOTES

1. NOT ALL NOTES, KEYNOTES OR LEGEND ITEMS MAY APPLY.
2. DIMENSIONS ARE FROM FACE OF FINISH TO FACE OF FINISH U.N.O.
3. ALL NEW SUSPENDED CEILING GRID AND CEILING TILE TO MATCH EXISTING ADJACENT SYSTEM.
4. ALL NEW GYP. BD. CEILING AND INFILL CEILING TO MATCH ADJACENT SURFACE TEXTURE AND FINISH.
5. ELECTRICAL CONTRACTOR TO ENSURE THAT MODIFIED LAYOUT OF LIGHT FIXTURES ARE PLANNED SO ELECTRICAL CAPACITY AND ENERGY USE IS CONSISTENT WITH EXISTING DESIGN.
6. CENTER LIGHT AND MECHANICAL FIXTURES WITHIN CEILING TILE TYPICAL, UNO.
7. MECHANICAL CONTRACTOR TO MOVE EXISTING SUPPLY AND RETURN GRILLS TO AVOID INTERFERENCE WITH ANY NEW WALL OR SOFFIT LOCATIONS. MECHANICAL SYSTEM SHALL BE BALANCED TO ENSURE ANY MINOR ADJUSTMENTS TO THE SYSTEM ALLOW FOR PROPER CONDITIONING OF SPACE.
8. ALL SOFFIT DESIGN AND ACCENT LIGHTING POSITIONS TO COORDINATE WITH FURNITURE LAYOUT. SEE SHEET A13 AND 4/A3.1.
9. ALL SECURITY DEVICES INCLUDING CAMERAS, MONITORS, ALARMS, ETC, WILL BE DESIGNED AND INSTALLED BY THE SECURITY COMPANY AND ARE NOT SHOWN ON THESE PLANS, NOR ON THE ELECTRICAL PLANS.
10. CONTRACTOR TO COORDINATE WITH FIRE SPRINKLER & FIRE ALARM DESIGN/BUILD CONTRACTORS TO ENSURE ANY MINOR MODIFICATIONS ARE ALLOWED BY CODE. THESE MINOR MODIFICATIONS ARE ASSUMED TO BE A SLIGHT RAISING, LOWERING OR REPOSITIONING ONLY.
11. REPLACE ALL DAMAGED/ DISCOLORED/ DIRTY TILE AND GRID, TYPICAL.

RCP SHEET KEY NOTES

1. NOT USED.
2. SUSPENDED METAL GRID SYSTEM W/ 24"x48" ACOUSTICAL LAY IN TILES, CENTER IN SPACE. 2X2 ACT THIS AREA. FULL CEILING HEIGHT AS CLOSE TO STRUCTURE & HVAC AS POSSIBLE. (2)
3. 5/8" GYP BD. CEILING. PROVIDE MR. GYP. BD. AT WET AREAS.
4. NOT USED.
5. NOT USED.
6. NOT USED.
7. INFILL EXISTING CEILING GRID/ TILE AS REQUIRED IN THIS AREA.
8. NEW SIGNAGE BY OTHERS. (2)
9. NO CEILING WORK IN THIS AREA. (2)
10. PROVIDE NEW HEADER AT 7'-0".
11. EXISTING EXIT LIGHT LOCATION. GC TO FIELD VERIFY IF EXISTING LIGHT EXISTS. IF LIGHT DOES NOT EXIST, INSTALL AS LOCATED OR AS DIRECTED BY FIRE MARSHAL." (5)
12. NOT USED.
13. NOT USED.
14. NOT USED.

INTERPLAN LLC
ARCHITECTURE
ENGINEERING
INTERIOR DESIGN
PROJECT MANAGEMENT

AA 003420
CA8660

933 LEE ROAD, FIRST FLOOR
ORLANDO, FLORIDA 32810
PH 407.645.5008
FX 407.629.9124

SEAL

HARVEY JACOBY
MAR 2 2 2010

CONSULTANT:

REVISIONS:

NO.	DATE	REMARKS
2	06-09-09	OWNER REVISIONS
5	10-05-09	PERMIT COMMENTS
6	12-03-09	OWNER REVISIONS
7	03-22-10	PERMIT COMMENTS

CHASE

INTERIOR REBRANDING CONVERSION
MIAMI BEACH - ALTON ROAD
WAMU BLDG ID# 1724 CHASE STORE ID# 1742
1801 ALTON ROAD
MIAMI, FL 33139

COPYRIGHT © 2009
INTERPLAN LLC RESERVES COPYRIGHT & OTHER RIGHTS RESTRICTING THESE DOCUMENTS TO THE ORIGINAL SITE OR PURPOSE FOR WHICH THEY WERE PREPARED. REPRODUCTIONS, CHANGES OR ASSIGNMENTS ARE PROHIBITED.

PROJECT NO: 2009.0109
DATE: 04-30-09

A2.0
REFLECTED CEILING PLAN

DRAWN BY:
CHECKED BY: LRM / EOB

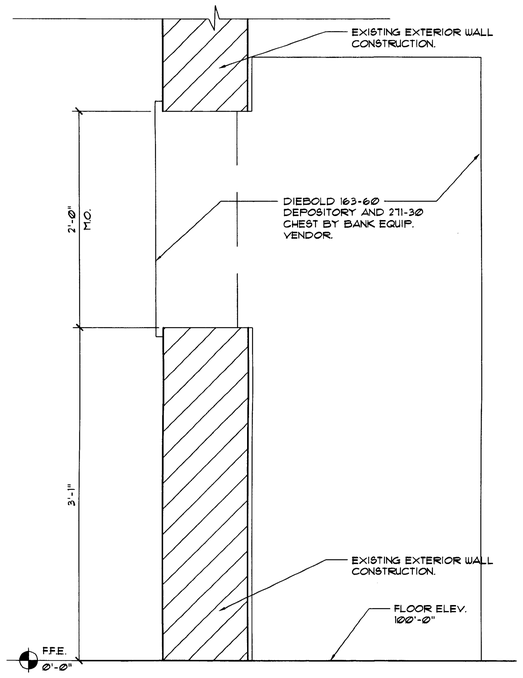

③ AFTER HOURS DEPOSITORY (AHD) DETAILS

SCALE: 1 1/2" = 1'-0"

① NOT USED

② NOT USED

③ NOT USED

④ NOT USED

SCALE: 1/4" = 1'-0"

DOOR SCHEDULE

REMARKS	DOOR NUMBER	DR. TYPE	DIMENSIONS: WIDTH	HEIGHT	THICK.	DOOR MATERIAL (AL. = ALUMINUM, GL. = GLASS, H.M. = HOLLOW METAL, S.C. = SOLID CORE, WD. = WOOD)	FRAME MATERIAL	REMARKS	SET NUMBER	TRANSITION STRIP	EL. CARD READER	REMARKS
BM OFFICE	119A	C	3'-0"	7'-0"	1-3/4"	WD/GL	WD		03			HARDWARE NOTE 2

DOOR NOTES

1. EXTERIOR METAL DOORS TO BE GALV. & INSULATED.
2. HOLLOW METAL JAMBS IN MASONRY TO BE GROUTED SOLID.
3. ALL DOORS TO MATCH EXISTING BUILDING STANDARDS.
4. UNDERCUT ATM DOOR AND PROVIDE GRILL
5. TO BE MADE OF BULLET RESISTANT MATERIAL - COORDINATE WITH PMC AND SECURITY VENDOR.

HARDWARE NOTES

1. COORDINATE PERMANENT CORE / KEYING MANF'R & INSTALLATION WITH PMC/ CHASE. PERMANENT CORE / KEYING INCLUDED IN BID KEYING ALLOWANCE. CONSTRUCTION CORES BY GENERAL CONTRACTOR.
2. MOUNT CLOSER ON PULL SIDE.
3. ALL HARDWARE TYPES AND FINISHES TO MATCH EXISTING. CHASE STANDARD HARDWARE SETS PROVIDED FOR STANDARDS REGARDING FUNCTIONS AND ITEMS TO BE FURNISHED.
4. G.C. TO EVALUATE EXISTING HARDWARE AND COORDINATE WITH PMC IF NEW SHOULD BE INSTALLED.

DOOR, STOREFRONT AND HARDWARE SPECIFICATIONS

1. ALL DOOR HARDWARE TO MEET ADA ACCESSIBILITY GUIDELINES.
2. PROVIDE KNURLED HARDWARE FOR HC ACCESSIBILITY COMPLIANCE TO DOORS 108A, 109A, & 110A

HARDWARE SCHEDULE

HARDWARE SET #02

CHASE STANDARD (FOR REFERENCE)

DOOR NUMBER	QUANTITY	DESCRIPTION	ITEM NUMBER	FINISH *	MFR.
101B	3	BUTT HINGE	5BB1 4.5 x 4.5 NRP	630	IVE
VESTIBULE	1	MULLION	KR4854	689	VON
	1	PANIC HARDWARE	CD99EO	626	VON
	1	PANIC HARDWARE	CD99NL-OP	626	VON
	1	MORTISE CYLINDER	20-001 WITH C123 KEYWAY	626	SCH
	2	MORTISE CYLINDER	20-001 X011-948 WITH C123 KEYWAY	626	SCH
	1	RIM CYLINDER	20-022	626	SCH
	2	OFFSET DOOR PULL	8190-0-0	630	IVE
	2	SURFACE CLOSER	4111 EDA	AL	LCN
	2	OVERHEAD HOLDER	104H	630	GLY
		PERMANENT CYLINDER CORES BY OWNER			

*NOTE: ALL HARDWARE FINISHES TO MATCH EXISTING. CHASE STANDARD SHOWN FOR REFERENCE ONLY.

HARDWARE SET #03

CHASE STANDARD (FOR REFERENCE)

DOOR NUMBER	QUANTITY	DESCRIPTION	ITEM NUMBER	FINISH *	MFR.
102A & 116A	3	HINGE	5BB1 4.5 x 4.5	652	IVE
ATM ROOM & FILE ROOM	1	ELECTRONIC LOCK	SCHLAGE KING COBRA MODEL KC 5106-06-626 W/ SCHLAGE STANDARD CYLINDER C123 KEYWAY	626	SCH
	1	SURFACE CLOSER	4011 WITH STOP	AL	LCN
	1	KICK PLATE (PUSH)	8400 8" x 2" LDW	630	IVE
	1	DOOR SCOPE	D62000 132 DEGREE	ALS	DSS
	3	SILENCER	SR64	GRY	IVE
		PERMANENT CYLINDER CORES BY OWNER			

*NOTE: ALL HARDWARE FINISHES TO MATCH EXISTING. CHASE STANDARD SHOWN FOR REFERENCE ONLY.

HARDWARE SET #04

CHASE STANDARD (FOR REFERENCE)

DOOR NUMBER	QUANTITY	DESCRIPTION	ITEM NUMBER	FINISH *	MFR.
105A & 112A	3	HINGE	5BB1 4.5 x 4.5	652	IVE
TELLER PRINTING	1	ELECTRONIC LOCK	SCHLAGE KING COBRA MODEL KC 5106-06-626 W/ SCHLAGE STANDARD CYLINDER C123 KEYWAY	626	SCH
	1	SURFACE CLOSER	4011	626	LCN
	1	KICK PLATE (PUSH)	8400 8" x 2" LDW	630	IVE
	1	WALL STOP	WS406CVX	626	IVE
	1	DOOR SCOPE	D62000 132 DEGREE	ALS	DSS
	3	SILENCER	SR64	GRY	IVE
		PERMANENT CYLINDER CORES BY OWNER			

*NOTE: ALL HARDWARE FINISHES TO MATCH EXISTING. CHASE STANDARD SHOWN FOR REFERENCE ONLY.

HARDWARE SET #09

CHASE STANDARD (FOR REFERENCE)

DOOR NUMBER	QUANTITY	DESCRIPTION	ITEM NUMBER	FINISH *	MFR.
119A	3	HINGE	5BB1 4.5 x 4.5	652	IVE
BM OFFICE	1	PASSAGE LATCH	ND108 ATH	626	SCH
	1	KICK PLATE (PUSH)	8400 8" x 2" LDW	630	IVE
	2	WALL STOP	WS406CVX	630	IVE
	3	SILENCER	SR64	GRY	IVE

*NOTE: ALL HARDWARE FINISHES TO MATCH EXISTING. CHASE STANDARD SHOWN FOR REFERENCE ONLY.

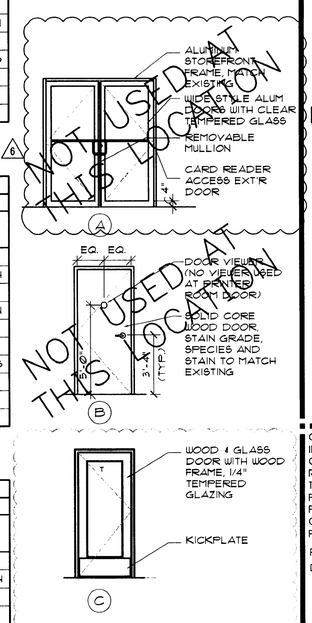

DOOR ELEVATIONS

NOT USED AT THIS LOCATION

INTERPLAN LLC
ARCHITECTURE
ENGINEERING
INTERIOR DESIGN
PROJECT MANAGEMENT

AA 003420
CA8660

933 LEE ROAD, FIRST FLOOR
ORLANDO, FLORIDA 32810
PH 407.645.5008
FX 407.629.9124

SEAL:

Thomas Jacoby
DEC 07 2009

CONSULTANT:

REVISIONS:

NO.	DATE	REMARKS
2	06-09-09	OWNER REVISIONS
6	12-03-09	OWNER REVISIONS

CHASE

INTERIOR REBRANDING CONVERSION
MIAMI BEACH - ALTON ROAD
WAMU BLDG ID# 1924 CHASE STORE ID# 17-2
1801 ALTON ROAD
MIAMI, FL 33139

COPYRIGHT © 2009
INTERPLAN LLC RESERVES COPYRIGHT & OTHER RIGHTS RESTRICTING THESE DOCUMENTS TO THE ORIGINAL SITE OR PURPOSE FOR WHICH THEY WERE PREPARED. REPRODUCTIONS, CHANGES OR ASSIGNMENTS ARE PROHIBITED.

PROJECT NO: 2009.0109

DATE: 04-30-09

A3.0

INTERIOR ELEVATIONS, SECTIONS AND DETAILS

DRAWN BY: MG
CHECKED BY: EJW

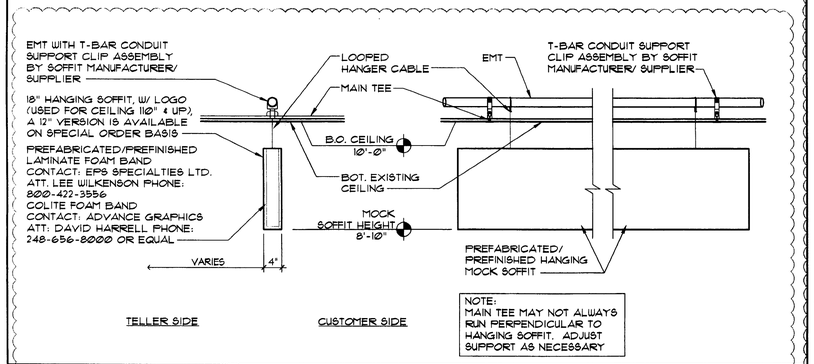

1B TELLER (MOCK) SOFFIT DETAIL

SCALE: 3/4" = 1'-0"

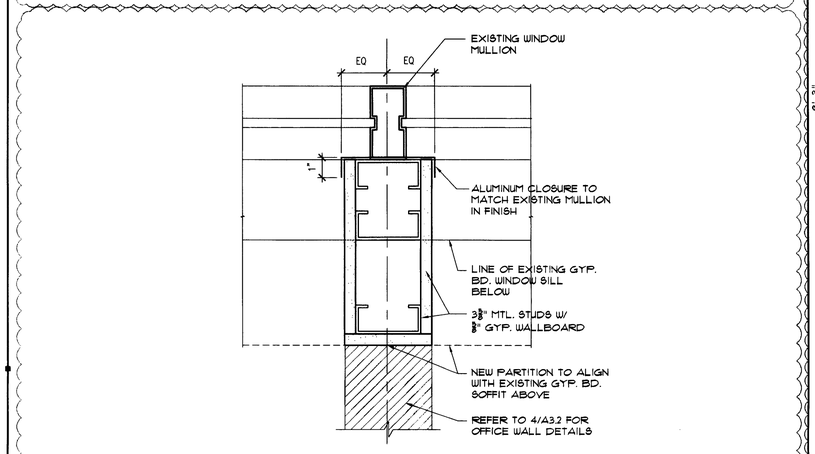

1 PARTITION DETAIL

SCALE: 3" = 1'-0"

GENERAL POWER AND DATA NOTES:

1. PROVIDE (2) DATA AND (1) DUPLEX OUTLET AT EACH TELLER STATION.
2. PROVIDE (1) DATA AND (1) DEDICATED DUPLEX OUTLET AT EACH TELLER CASH DISPENSER (T.C.D.).
3. PROVIDE (1) DATA AND (1) DUPLEX OUTLET AT EACH PRINTER STAND.

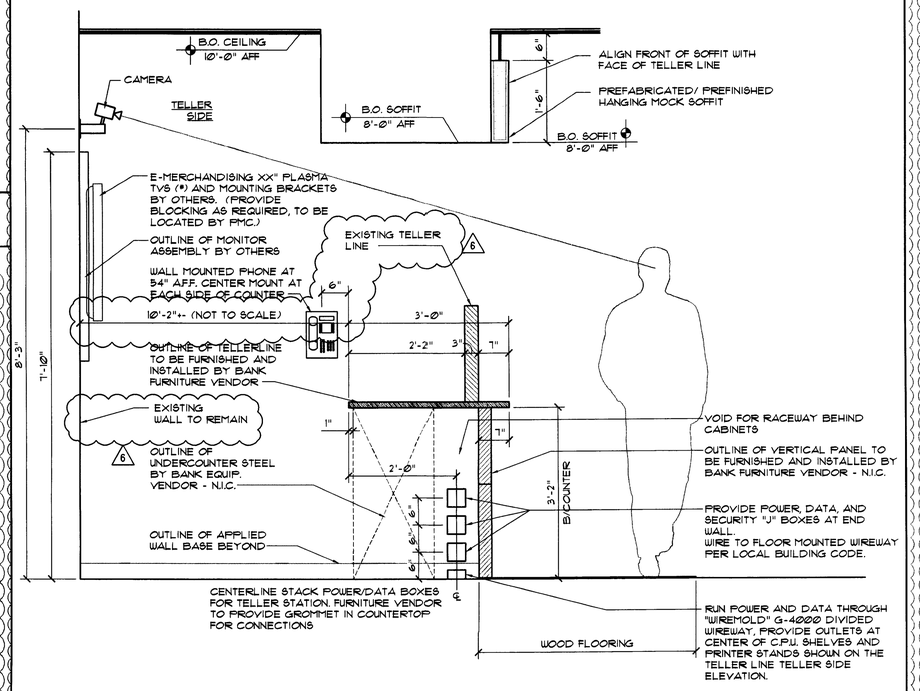

3 TELLERLINE SECTION

SCALE: 3/4" = 1'-0"

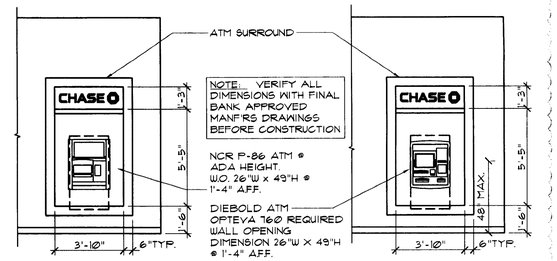

Ⓐ TYP. NCR ATM - STANDARD SURROUND

Ⓑ TYP. DIEBOLD ATM - STANDARD SURROUND

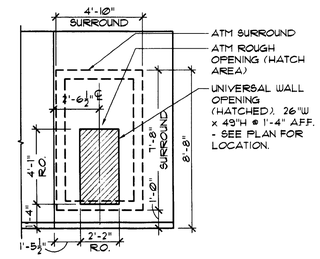

Ⓒ TYP. ATM ROUGH OPENING - STANDARD SURROUND

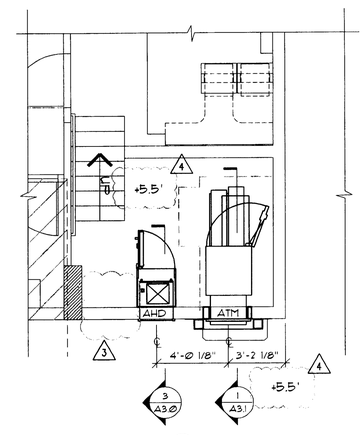

Ⓕ PLAN

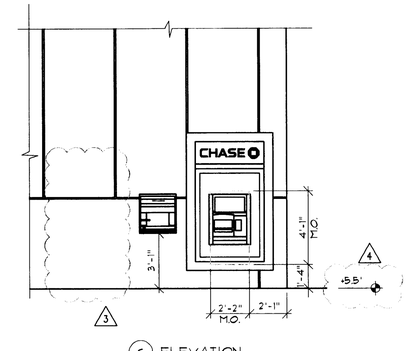

Ⓖ ELEVATION

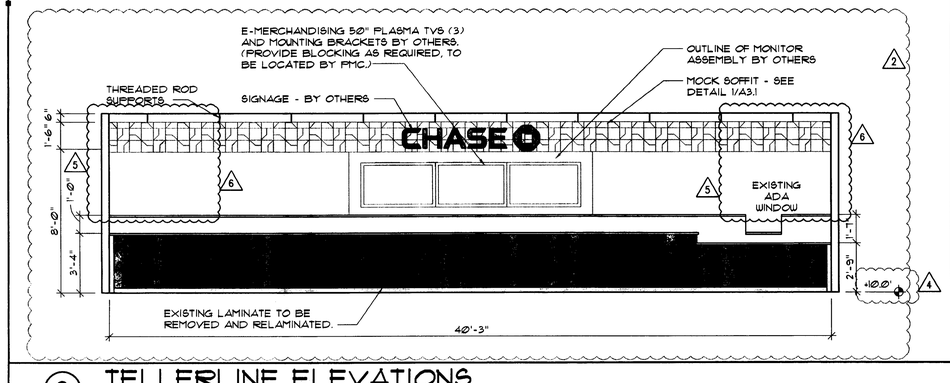

2 TELLERLINE ELEVATIONS WITHOUT BR GLASS

SCALE: 1/4" = 1'-0"

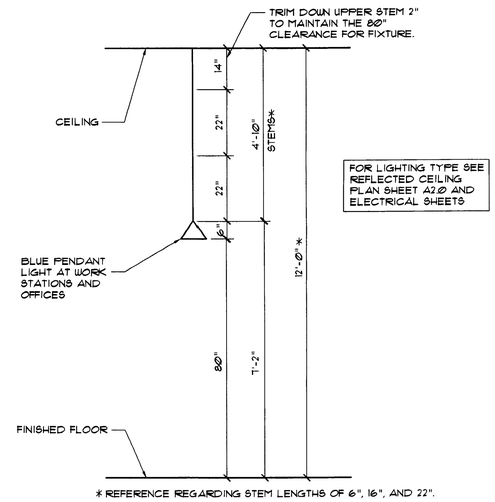

WORK STATIONS

4 PENDANT LIGHT (MOUNTING HEIGHT AND STEM SIZING)

SCALE: 1/2" = 1'-0"

5 ATM WALL OPENING DETAILS

SCALE: 1/4" = 1'-0"

INTERPLAN LLC
ARCHITECTURE
ENGINEERING
INTERIOR DESIGN
PROJECT MANAGEMENT

AA 003420
CA8660

933 LEE ROAD, FIRST FLOOR
ORLANDO, FLORIDA 32810
PH 407.645.5008
FX 407.629.9124

SEAL:

HARVEY JACOBY
DEC 07 2009

CONSULTANT:

REVISIONS:

NO.	DATE	REMARKS
2	06-09-09	OWNER REVISIONS
3	06-30-09	OWNER REVISIONS
4	07-28-09	PERMIT COMMENTS
5	10-05-09	PERMIT COMMENTS
6	12-03-09	OWNER REVISIONS

CHASE

INTERIOR REBRANDING CONVERSION
MIAMI BEACH - ALTON ROAD
WAMU BLDG ID# 1924 CHASE S'ORE ID# 1742
1801 ALTON ROAD
MIAMI, FL 33139

COPYRIGHT © 2009
INTERPLAN LLC RESERVES COPYRIGHT & OTHER RIGHTS RESTRICTING THESE DOCUMENTS TO THE ORIGINAL SITE OR PURPOSE FOR WHICH THEY WERE PREPARED. REPRODUCTIONS, CHANGES OR ASSIGNMENTS ARE PROHIBITED.

PROJECT NO: 2009.0109

DATE: 04-30-09

A3.1

INTERIOR ELEVATIONS, SECTIONS AND DETAILS

DRAWN BY:

CHECKED BY:

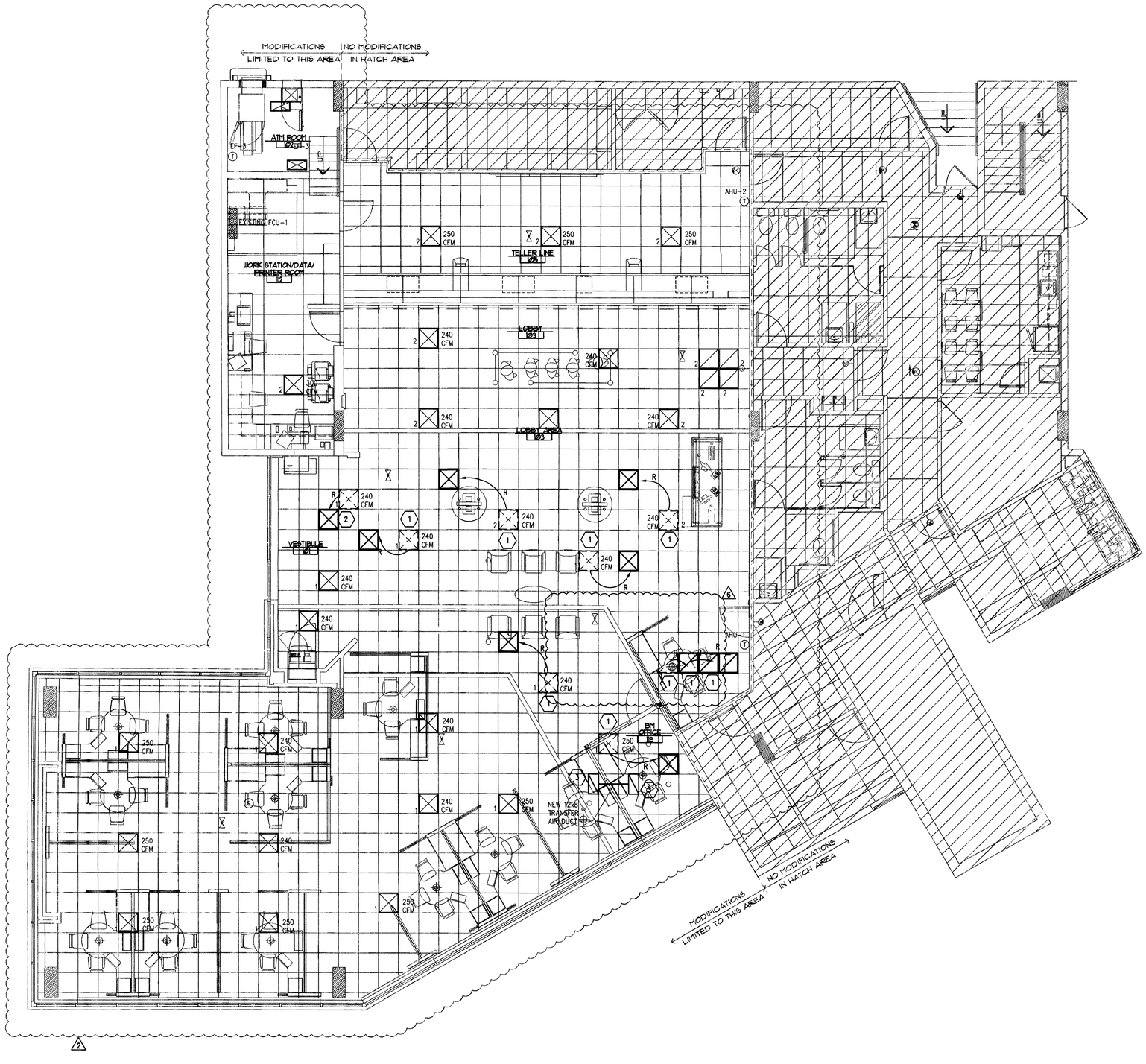

HVAC FLOOR PLAN
3/16" = 1'-0"

NORTH

KEYED NOTES

1. RELOCATE EXISTING SUPPLY/RETURN/EXHAUST AIR DIFFUSER AS SHOWN. EXTEND FLEX/DUCT AS REQUIRED. CFM'S TO REMAIN AS SHOWN.
2. EXTEND FLEX/DUCT AS REQUIRED. REPLACE EXISTING SUPPLY DIFFUSERS WITH NEW CEILING MOUNTED DIFFUSERS TO NEW LOCATION SHOWN. CFM'S TO REMAIN AS SHOWN.
3. ADD NEW 24x12 TRANSFER AIR GRILLD. MATCH EXISTING.

PLAN GENERAL NOTES

1. EXISTING SYSTEMS SHOWN ON THIS PLAN ARE BASED ON FIELD OBSERVATIONS AND AVAILABLE RECORD DRAWINGS. THESE INFORMATION IS PARTIALLY UNVERIFIED. CONTRACTOR ASSUMES RESPONSIBILITY FOR FIELD VERIFICATION AND INVESTIGATION PRIOR TO SUBMITTING BID.. DO NOT SCALE THESE PLANS.
2. EXISTING DIFFUSERS TO BE REUSED SHALL BE CLEANED AND FREE OF DEFECTS. REUSE EXISTING DIFFUSERS TO THE GREATEST EXTENT POSSIBLE.
3. ALL EXISTING DUCTWORK TO REMAIN UNLESS OTHERWISE NOTED.
4. SOME EXISTING BUILDING CONDITIONS FOR ELECTRICAL, PLUMBING, MECHANICAL AND FIRE PROTECTION SYSTEMS USED IN THE DESIGN OF THIS PROJECT ARE ASSUMED. ALL EXISTING CONDITIONS SHALL BE FIELD VERIFIED BY THE INSTALLING CONTRACTOR PRIOR TO COMMENCEMENT OF WORK. ALL NEW WORK AND EXISTING SYSTEMS OR EQUIPMENT INDICATED TO REMAIN OR BE RELOCATED SHALL BE IN COMPLIANCE WITH OWNER REQUIREMENTS AND COORDINATED WITH THE OWNER'S REPRESENTATIVE (PMC). ANY DISCREPANCIES SHALL BE REPORTED TO OWNER'S REPRESENTATIVE.

01/19/10

INTERPLAN LLC
ARCHITECTURE
ENGINEERING
INTERIOR DESIGN
PROJECT MANAGEMENT

AA 003420
CA8660

933 LEE ROAD, FIRST FLOOR
ORLANDO, FLORIDA 32810
PH 407.645.5008
FX 407.629.9124

SEAL:

CONSULTANT:

REVISIONS:

NO.	DATE	REMARKS
2	6-09-09	OWNER REVISIONS
6	12-03-09	OWNER REVISIONS

CHASE

INTERIOR REBRANDING CONVERSION
MIAMI BEACH - ALTON ROAD
WAMU BLDG ID# 1924 CHASE STORE ID# 1742
1801 ALTON ROAD
MIAMI, FL 33139

COPYRIGHT © 2009
INTERPLAN LLC RESERVES COPYRIGHT & OTHER RIGHTS RESTRICTING THESE DOCUMENTS TO THE ORIGINAL SITE OR PURPOSE FOR WHICH THEY WERE PREPARED. REPRODUCTIONS, CHANGES OR ASSIGNMENTS ARE PROHIBITED.

PROJECT NO: 2009.0109

DATE: 06/08/09

HVAC FLOOR PLAN

M1.0

DRAWN BY: GAB
CHECKED BY: MGR

SECTION 16000 – ELECTRICAL SPECIFICATIONS

DEMOLITION

I. SITE INVESTIGATION:

A. OBTAIN IN THE FIELD ALL INFORMATION RELEVANT TO THE PLACING OF ELECTRICAL WORK AND IN CASE OF INTERFERENCE WITH OTHER WORK, PROCEED AS DIRECTED BY THE OWNER REPRESENTATIVES (PMC) AND PROVIDE ALL LABOR AND MATERIALS NECESSARY TO COMPLETE THE WORK IN AN ACCEPTABLE MANNER.

C. SPECIAL CONSIDERATIONS: SPECIAL ATTENTION IS CALLED TO THE FACT THAT THERE WILL BE PIPING, FIXTURES OR OTHER ITEMS IN THE EXISTING BUILDING WHICH MUST BE REMOVED OR RELOCATED IN ORDER TO PERFORM THE ALTERATION WORK. BID SHALL INCLUDE ALL REMOVAL AND RELOCATION REQUIRED FOR COMPLETION OF THE ALTERATIONS AND THE NEW CONSTRUCTION.

D. OWNER'S SALVAGE: THE OWNER RESERVES THE RIGHT TO INSPECT THE MATERIAL SCHEDULED FOR REMOVAL AND SALVAGE ANY ITEMS HE DEEMS USABLE AS SPARE PARTS.

II. EXISTING CONDITIONS:

III. SUPPORT: ALL EXISTING CONDUIT AND CABLES WITHIN THE AREA OF RENOVATION SHALL BE PROVIDED WITH PROPER SUPPORTS AS SPECIFIED FOR NEW WORK IN OTHER SECTIONS OF THIS SPECIFICATION.

IIJ. INSTALLATION: ALL EXISTING ELECTRICAL WHICH IS DESIGNATED FOR REWORKING OR REQUIRES RELOCATION, REPAIR OR ADJUSTMENT SHALL CONFORM TO ALL APPLICABLE CODES AND SHALL BE TREATED AS NEW WORK COMPLYING TO ALL SECTIONS OF THIS SPECIFICATION.

IIK. VIOLATIONS: WHERE EXISTING CONDITIONS ARE DISCOVERED WHICH ARE NOT IN COMPLIANCE WITH THE CODES AND STANDARDS, THE CONTRACTOR SHALL SUBMIT PROPER DOCUMENTATION TO THE OWNER REPRESENTATIVES (PMC) FOR CLARIFICATION AND CORRECTIVE WORK DIRECTION. EXISTING CONDITIONS SHALL NOT REMAIN WHICH WILL CREATE A DISAPPROVAL OF THE RENOVATED AREA.

IIL. PATCHING: ALL EXISTING CONDUIT AND CABLE PENETRATIONS SHALL BE PROPERLY FIRE TREATED PER CODE AND SPECIFICATION REQUIREMENTS. THE CONTRACTOR SHALL THOROUGHLY INSPECT ALL EXISTING LOCATIONS AND INCLUDE THE COST OF PATCHING AND REPAIR IN HIS PROPOSED CONSTRUCTION COST.

GENERAL

I. GENERAL

A. THE CONTRACTOR SHALL FURNISH ALL MATERIAL, LABOR & EQUIP. NECESSARY TO COMPLETELY INSTALL ELECTRICAL & RELATED WORK INDICATED ON THE DRAWINGS AND IN THESE SPECIFICATIONS.

II. DISCREPANCIES

A. NOTIFY THE OWNER REPRESENTATIVES (PMC) OF ANY DISCREPANCIES FOUND DURING CONSTRUCTION OF THE PROJECT AND DO NOT PROCEED WITH THAT PORTION OF THE PROJECT, UNTIL A WRITTEN DEFINITIVE STATEMENT IS RECEIVED PROVIDING CLEAR DIRECTION. IF A CONFLICT EXISTS BETWEEN THE CONTRACT DOCUMENTS AND ANY APPLICABLE CODE OR STANDARD, THE MOST STRINGENT REQUIREMENT SHALL BE INCLUDED FOR THIS PROJECT. THE OWNER REPRESENTATIVES (PMC) SHALL MAKE THE DECISION REGARDING QUESTIONABLE AREAS OF CONFLICT.

III. CODE

A. ALL EQUIPMENT, WIRING AND THE ENTIRE INSTALLATION SHALL BE IN ACCORDANCE WITH THE APPLICABLE PROVISIONS OF THE LATEST EDITION OF THE NATIONAL ELECTRICAL CODE (N.E.C.), O.S.H.A. REQUIREMENTS, LIFE SAFETY CODE AND ALL APPLICABLE LOCAL AND STATE LAWS AND ORDINANCES.

B. THE CONTRACTOR SHALL PAY ALL INSPECTION FEES AND PURCHASE ALL PERMITS REQUIRED FOR THIS WORK.

IV. LOCATION OF EQUIPMENT

A. THE CONTRACTOR SHALL NOTE THAT THE ELECTRICAL DRAWINGS ARE INTENDED TO INDICATE DIAGRAMMATICALLY ONLY THE EXTENT, GENERAL CHARACTER AND LOCATION OF THE WORK. WORK INTENDED, BUT HAVING MINOR DETAILS OBVIOUSLY OMITTED, SHALL BE FURNISHED AND INSTALLED COMPLETE BY THIS CONTRACTOR.

B. THE CONTRACTOR SHALL VISIT THE SITE OF THE WORK AND THOROUGHLY FAMILIARIZE HIMSELF WITH ALL EXISTING CONDITIONS, AND SHALL THOROUGHLY REVIEW ALL DRAWINGS, SPECIFICATIONS AND PUBLISHED ADDENDA PRIOR TO BIDDING ON THIS WORK. NO EXTRAS TO HIS CONTRACT WILL BE ALLOWED FOR FAILURE TO COMPLY WITH THIS REQUIREMENT.

V. INSTALLATION

A. ALL EQUIPMENT AND MATERIALS SHALL BE INSTALLED IN A NEAT AND FIRST CLASS MANNER, LEVEL AND PLUMB, AND SECURELY SUPPORTED. THE ENTIRE INSTALLATION, AND MANNER OF INSTALLATION SHALL MEET THE COMPLETE SATISFACTION OF THE OWNER'S REPRESENTATIVE OR IT SHALL BE REMOVED AND REWORKED AS DIRECTED BY THE OWNER'S REPRESENTATIVE AT THE CONTRACTOR'S EXPENSE.

B. ALL WIRING SHALL BE IN CONDUIT. THE USE OF E.N.T., BX, NM, ETC. OR PRE-MANUFACTURED CABLE ASSEMBLIES OR ALUMINUM WIRE WILL NOT BE PERMITTED. MC CABLE IS ACCEPTABLE WHERE ALLOWED BY NEC.

VII. WIRING:

A. EACH THREE-PHASE CIRCUIT SHALL BE RUN IN A SEPARATE CONDUIT UNLESS OTHERWISE SHOWN ON THE DRAWINGS. UNLESS OTHERWISE ACCEPTED BY THE OWNER REPRESENTATIVES (PMC), CONDUIT SHALL NOT BE INSTALLED CONCEALED UNLESS SPECIFICALLY DIRECTED TO BE EXPOSED. WHERE CIRCUITS ARE SHOWN AS "HOME-RUNS" ALL NECESSARY FITTINGS AND BOXES SHALL BE PROVIDED FOR A COMPLETE RACEWAY INSTALLATION.

VIII. CUTTING AND PATCHING

A. ALL CUTTING AND PATCHING REQUIRED FOR INSTALLATION OF ELECTRICAL WORK SHALL BE THE RESPONSIBILITY OF THE ELECTRICAL CONTRACTOR.

B. NO ADDITIONAL COMPENSATION WILL BE AUTHORIZED FOR CUTTING AND PATCHING WORK THAT IS NECESSITATED BY ILL- TIMED, DEFECTIVE OR NON-CONFORMING INSTALLATIONS.

IX. IDENTIFICATION NAMEPLATES

A. FURNISH AND INSTALL NAMEPLATES ON ANY NEW ITEMS OF ELECTRICAL EQUIPMENT. NAMEPLATES SHALL MATCH EXISTING. WORDING SHALL SUITABLY DESCRIBE ITEMS AND NAMEPLATES SHALL BE ATTACHED USING PROPER SIZE AND TYPE STAINLESS STEEL BOLTS.

XI. WARRANTIES

A. GUARANTEE ALL ELECTRICAL SYSTEM MATERIALS AND WORKMANSHIP TO BE FREE FROM DEFECTS FOR A PERIOD OF ONE (1) YEAR FROM THE DATE OF FINAL ACCEPTANCE AND PROPERLY CORRECT LATENT DEFECTS ARISING WITHIN THIS PERIOD UPON NOTIFICATION BY THE OWNER'S REPRESENTATIVE WITHOUT ADDITIONAL COMPENSATION

XII. CLEANING

A. REGULARLY REMOVE REFUSE AND DEBRIS ACCUMULATING FROM ELECTRICAL CONSTRUCTION AND PRIOR TO ACCEPTANCE OF THIS WORK, LEAVE THE PREMISES "BROOM CLEAN" INSOFAR AS AFFECTED BY ELECTRICAL WORK.

B. CLEAN ALL LIGHT FIXTURES, LAMPS AND LENSES AND PANELBOARD INTERIORS PRIOR TO FINAL ACCEPTANCE.

RACEWAYS

I. RACEWAYS

A. EXTENT OF RACEWAY WORK IS INDICATED DIAGRAMMATICALLY ON THE DRAWINGS AND IN THE SCHEDULES.
1. WHEN SIZE IS NOT INDICATED ON PLANS, CONDUIT SHALL BE SIZED FOR CONDUCTORS IN ACCORDANCE WITH TABLES 4(A)(B)(C), CHAPTER 9 OF THE N.E.C..
2. THE ROUTING AND METHOD OF INSTALLATION OF ALL CONDUITS SHALL BE CO-ORDINATED SO AS NOT TO INTERFERE WITH OTHER EQUIPMENT INSTALLATIONS AND SHALL MEET WITH THE COMPLETE SATISFACTION OF THE OWNER'S REPRESENTATIVE.
3. THE USE IF INTERMEDIATE METAL CONDUIT (IMC), ELECTRICAL NON-METALLIC TUBING (ENT), ARMORED CABLE (AC), OR MANUFACTURED CABLE ASSEMBLIES SHALL NOT BE INCORPORATED INTO THE WORK. MC CABLE IS ACCEPTABLE WHERE ALLOWED BY NEC. FOR 20A, 120V CIRCUITS.
4. USE ONLY THE TYPES OF RACEWAYS SPECIFIED HERE IN.

B. TYPES OF RACEWAYS SPECIFIED IN THIS SECTION INCLUDE THE FOLLOWING:
1. ELECTRICAL METALLIC TUBING (EMT); MINIMUM TRADE SIZE 1/2".
2. FLEXIBLE METAL CONDUIT. MINIMUM TRADE SIZE 1/2".
3. LIQUID- TIGHT FLEXIBLE METAL CONDUIT (SEALTIGHT) MINIMUM TRADE SIZE 1/2".
4. RIGID METAL CONDUIT. MINIMUM TRADE SIZE 1/2".
5. RIGID NONMETALLIC CONDUIT (PVC). SCHEDULE 40, MINIMUM TRADE SIZE 1/2".

C. FITTINGS
1. FITTINGS FOR EMT SHALL BE STEEL SET SCREW OR COMPRESSION TYPE WITH FACTORY INSTALLED INSULATED THROAT CONNECTORS. DIE CAST OR POT METAL FITTINGS ARE NOT ACCEPTABLE.
2. FITTINGS FOR FLEXIBLE CONDUIT SHALL BE STEEL OR CAST IRON.
3. FITTINGS FOR RIGID CONDUIT SHALL BE STEEL THREADED TYPE.
4. FITTINGS FOR PVC SHALL BE SCHEDULE 40 GLUE-ON TYPE.

II. INSTALLATION OF RACEWAYS

A. ALL CONDUITS SHALL BE INSTALLED CONCEALED, EXCEPT IN EQUIPMENT ROOM, CHASES OR AS INDICATED ON THE DRAWINGS. ALL CONDUITS, EXPOSED AND CONCEALED SHALL BE RUN PARALLEL AND PERPENDICULAR TO BUILDING LINES AND SHALL BE GROUPED TOGETHER AS MUCH AS POSSIBLE, EVEN ABOVE LAY-IN CEILINGS.

B. A SEPARATE GROUNDING CONDUCTOR SHALL BE INSTALLED IN ALL RUNS. GROUNDING CONDUCTOR SIZES LARGER THAN #12 AWG WHERE REQUIRED BY THE NEC, SHALL BE SIZED AS INDICATED IN THE NEC. ALL GROUNDING CONDUCTORS SHALL HAVE A GREEN OUTER COVERING, OR GREEN MARKING TAPE OVER THEIR ENTIRE EXPOSED LENGTHS.

C. MECHANICALLY FASTEN TOGETHER METAL CONDUITS, ENCLOSURES, AND RACEWAYS FOR CONDUCTORS TO FORM A CONTINUOUS ELECTRICAL CONDUCTOR. CONNECT TO ELECTRICAL BOXES, FITTINGS AND CABINETS TO PROVIDE ELECTRICAL CONTINUITY AND FIRM MECHANICAL ASSEMBLY.

D. AVOID USE OF DISSIMILAR METALS THROUGH SYSTEM TO ELIMINATE POSSIBILITY OF ELECTROLYSIS.

E. INSTALL EXPANSION FITTINGS IN RACEWAYS EVERY 200' LINEAR RUN OR WHEREVER STRUCTURAL EXPANSION JOINTS ARE CROSSED.

F. PROVIDE NYLON PULL CORD IN ALL EMPTY CONDUITS.

G. CONDUIT INSTALLATION
1. USE E.M.T. FOR ALL INTERIOR CONCEALED AND FOR EXPOSED WORK NOT SUBJECT TO MECHANICAL INJURY.
2. USE P.V.C. FOR ALL UNDER SLAB WORK OR WORK INSTALLED IN CONCRETE. USE RIGID METAL CONDUIT ELBOW AT STUP-UP LOCATIONS.
3. USE FLEXIBLE METAL CONDUIT FROM OUTLET BOXES TO RECESSED LIGHTING FIXTURE AND FINAL 24" OF CONNECTION TO ITEMS SUBJECT TO MOVEMENT OR VIBRATION.
4. USE LIQUID-TIGHT FLEXIBLE CONDUIT FOR FINAL 24" CONNECTION TO ITEMS WHERE SUBJECTED TO ONE OR MORE OF THE FOLLOWING CONDITIONS:
   a. MOIST OR HUMID ATMOSPHERE WHERE CONDENSATE CAN BE EXPECTED TO ACCUMULATE.
   b. CORROSIVE ATMOSPHERE.
   c. SUBJECTED TO WATER SPRAY OR DRIPPING OIL, WATER OR GREASE.
   d. FINAL CONNECTION TO ROTATING OR VIBRATING EQUIPMENT.
5. CUT CONDUITS STRAIGHT, PROPERLY REAM AND CUT THREADS FOR HEAVY WALL CONDUIT DEEP AND CLEAN.
6. FIELD BEND CONDUIT WITH BENDERS DESIGNED FOR THE PURPOSE SO AS NOT TO DISTORT NOR VARY INTERNAL DIAMETER.

CONDUCTORS

I. CONDUCTORS

A. ALL WIRE SHALL BE COPPER WITH THWN INSULATION.

B. THE USE OF ARMORED , BX, NM, OR ANY MANUFACTURED CABLE ASSEMBLY (EXCEPT MC) SHALL NOT BE INCORPORATED INTO THE WORK.

C. MC CABLE SHALL BE ACCEPTABLE FOR USE ON ALL 20 AMP 120V BREAKER CIRCUITS, ALL CIRCUITS 30 AMPS AND ABOVE AND ALL 208 VOLTS SHALL BE IN RACEWAY.

D. ALL WIRING SHALL BE IN CONDUIT.

E. COLOR CODING OF CONDUCTORS SHALL BE AS FOLLOWS:
1. 120/208V SYSTEMS: PHASE A- BLACK, PHASE B- RED, PHASE C- BLUE, NEUT. - WHITE, GND. - GREEN.

F. AWG #10 AND SMALLER SHALL BE SOLID. AWG #8 AND LARGER SHALL BE STRANDED.

II. WIRE CONNECTIONS

A. ALL FEEDER AND SUB-FEEDER WIRING CONNECTIONS SHALL BE MADE WITH COMPRESSION CONNECTORS BY SQUARE D OR ACCEPTABLE EQUIVALENT.

B. ALL BRANCH WIRING CONNECTIONS SHALL BE 3M SCOTCH LOCK CONNECTORS OR ACCEPTABLE EQUIVALENT.

C. WHERE CABLE CONNECTIONS REQUIRE INSULATION, SCOTCH #33, ELECTRICAL TAPE SHALL BE USED FOR WRAPPING.

BOXES AND FITTINGS

I. BOXES AND FITTINGS

A. EXTENT OF ELECTRICAL BOX AND ASSOCIATED FITTING WORK IS INDICATED BY DRAWINGS AND SCHEDULES.

II. OUTLET BOXES

A. CEILING: 4" SQUARE, 2-1/8" DEEP FOR EXPOSED OR FURRED WORK: 3" DEEP FOR BOXES POURED IN CONCRETE. PROVIDE CONCRETE POUR BOXES OF THE TYPE SPECIALLY DESIGNED FOR THE APPLICATION. PROVIDE PLASTER RINGS WHERE REQUIRED.

B. WALL: 4" SQUARE, 2-1/8" DEEP BOXES: PROVIDE EXTENSION RINGS OR COVERS OF SUFFICIENT DEPTH TO BRING COVERS FLUSH WITH THE FINISHED SURFACE.

C. MASONRY: FOR FLUSH MOUNTED BOXES IN EXPOSED MASONRY OR TILE, PROVIDE COVERS WITH SQUARE CORNERS ON THE RAISED PORTION AND WITH SUFFICIENT DEPTH TO TRIM OUT FLUSH WITH FINISHED SURFACE.

III. PULL AND JUNCTION BOXES

A. PROVIDE BOXES WHERE REQUIRED TO FACILITATE THE PULLING OF WIRES OR CABLES. BOXES SHALL BE IN ACCORDANCE WITH ARTICLE 314 OF N.E.C..

IV. ACCESSORIES

A. PROVIDE CORROSION-RESISTANT KNOCKOUT CLOSURES, CONDUIT LOCKNUTS AND MALLEABLE IRON CONDUIT BUSHINGS, OFFSET CONNECTORS, OF TYPES AND SIZES, TO SUIT RESPECTIVE INSTALLATION REQUIREMENTS AND APPLICATIONS.

V. INSTALLATION OF BOXES AND FITTINGS

A. POSITION RECESSED OUTLET BOXES ACCURATELY TO ALLOW FOR SURFACE FINISH THICKNESS.

B. FASTEN ELECTRICAL BOXES FIRMLY AND RIGIDLY TO SUBSTRATES OR STRUCTURAL SURFACES TO WHICH ATTACHED OR SOLIDLY EMBED ELECTRICAL BOXES IN CONCRETE OR MASONRY.

VI. LOCATIONS OF OUTLETS

A. IN GENERAL THE VARIOUS OUTLETS ARE TO BE LOCATED AT THE FOLLOWING HEIGHTS ABOVE FINISHED FLOOR TO THE CENTER LINE OF BOX, UNLESS NOTED OTHERWISE AT AN INDIVIDUAL OUTLET ON THE DRAWINGS:

A. WALL SWITCHES (VERT. MTD.) 48"

B. RECEPTACLES (VERT. MTD.) 18"

C. PHONE OUTLETS (VERT. MTD.) 18"

B. OUTLET MOUNTING HEIGHTS INDICATED ON THE DRAWINGS TAKE PRECEDENCE. REFER TO DRAWINGS FOR DETAILS OF OTHER EQUIPMENT MOUNTING HEIGHTS. MOUNTING HEIGHTS FOR FLUSH OUTLETS IN BLOCK WALLS MAY BE CHANGED FOR INSTALLATION. CONSULT OWNER'S REPRESENTATIVE IN FIELD PRIOR TO ANY SUCH INSTALLATION.

CONNECTIONS FOR EQUIPMENT

I. CONNECTIONS FOR EQUIPMENT

A. GENERAL: FOR EACH ELECTRICAL CONNECTION INDICATED PROVIDE COMPLETE ASSEMBLY OF MATERIALS, INCLUDING BUT NOT NECESSARILY LIMITED TO, PRESSURE CONNECTORS, TERMINALS (LUGS), ELECTRICAL INSULATING TAPE, HEAT-SHRINKABLE INSULATING TUBING, CABLE TIES, SOLDERLESS WIRE-NUTS, AND OTHER ITEMS AND ACCESSORIES AS NEEDED TO COMPLETE SPLICES AND TERMINATIONS OF TYPES INDICATED.

WIRING DEVICES

I. WIRING DEVICES

A. THE EXTENT OF WIRING DEVICE WORK IS INDICATED BY THE DRAWINGS AND SCHEDULES.

B. PROVIDE WIRING DEVICES WHICH ARE U.L. LISTED AND LABELED.

II. ACCEPTABLE MANUFACTURERS

A. HUBBELL CO.

B. GENERAL ELECTRIC CO.

C. LEVITON MFG. CO.

III. FABRICATED WIRING DEVICES

A. SWITCHES SHALL BE 20 AMP. 120/277 VOLT RATED, HUBBELL #1221 - IVORY OR BROWN. (MATCH EXISTING)

B. RECEPTACLES SHALL BE 20 AMP 125 VOLT RATED, HUBBELL #5362 - IVORY OR BROWN. (MATCH EXISTING) FOR OTHER APPLICATIONS REFER TO THE DRAWINGS.

C. PROVIDE SMOOTH FINISH PLATES FOR ALL DEVICES WITH APPROPRIATE MOUNTING ARRANGEMENTS FOR GANGED DEVICES. FOR TELEPHONE AND DATA OUTLETS PROVIDE BUSHED HOLE COVER PLATES. PLATES SHALL BE IVORY, BROWN OR GRAY STAINLESS STEEL. (MATCH EXISTING)
1. IVORY PLATES FOR ALL AREAS, EXCEPT BROWN PLATES ON WOOD OR DARK SURFACES. (MATCH EXISTING)
2. IVORY DEVICES WHERE 302 STAINLESS STEEL OR IVORY PLATES ARE USED.
3. BROWN DEVICES WHERE BROWN PLATES ARE USED.

LIGHTING FIXTURES

I. LIGHTING FIXTURES

A. HANDLE LIGHTING FIXTURES CAREFULLY TO PREVENT DAMAGE, BREAKING AND SCORING. DO NOT INSTALL DAMAGED FIXTURES OR COMPONENTS, REPLACE WITH NEW.

B. SHIP FIXTURES FACTORY ASSEMBLED, WITH PARTS REQUIRED FOR A COMPLETE INSTALLATION.

C. FLUORESCENT BALLAST SHALL BE CLASS P, LOW-ENERGY RAPID START SOUND RATED A.

D. PROVIDE FLUORESCENT LAMPS OF TYPES INDICATED.

E. PROVIDE FIXTURES AND/OR FIXTURE OUTLET BOXES WITH HANGERS TO PROPERLY SUPPORT FIXTURE WEIGHT.

F. INSTALL FLUSH MOUNTED FIXTURES TO ELIMINATE LIGHT LEAKAGE BETWEEN FRAME AND FINISHED SURFACE.

G. AT DATE OF SUBSTANTIAL COMPLETION REPLACE LAMPS IN ALL FIXTURES WHICH ARE OBSERVED TO BE INOPERATIVE OR NOTICEABLY DIMMED AFTER CONTRACTORS USE AS JUDGED BY THE OWNER'S REPRESENTATIVE

LOAD SUMMARY

PANEL		DECREASE (AMPS)	INCREASE (AMPS)	TOTAL LOAD (AMPS)
P - ORIGINAL LOAD	200			132.0
P - REMOVED LOAD		4.3		
P - ADDED LOAD			8.3	
P - NEW LOAD				136.0
L - ORIGINAL LOAD	100			82.0
L - REMOVED LOAD		3.0		
L - ADDED LOAD			4.0	
L - NEW LOAD				83.0

NOTE: DO NOT SHARE THE NEUTRAL OR ISOLATED GROUND WIRES OF AN ISOLATED GROUND RECEPTACLE CIRCUIT WITH ANY OTHER CIRCUIT UNLESS IT IS A CIRCUIT SERVING ONLY ISOLATED GROUND RECEPTACLES.

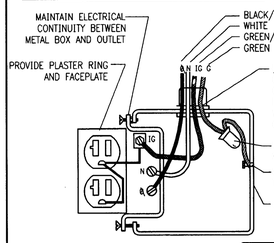

NOTE: THE ISOLATED GROUND CONDUCTOR SHALL ORIGINATE AT THE ISOLATED GROUND BAR OF PANEL.

PROVIDE WIRE NUT ON PHASE CONDUCTOR WHERE CONDUCTOR IS CUT

1 I. G. RECEPTACLE GROUNDING DETAIL
NTS

NOTICE

THIS PROJECT DOES NOT HAVE AN EXISTING FIRE ALARM SYSTEM OR AN EXISTING FIRE SPRINKLER SYSTEM. THESE ITEMS ARE NOT REQUIRED FOR THIS PROJECT.

1

LEGEND

- RECESSED FLUORESCENT LIGHTING FIXTURE
- RECESSED LIGHTING FIXTURE
- EXIT LIGHT (HATCHING DENOTES FACE)
- WALL MOUNTED LIGHTING FIXTURE. SEE SCHEDULE FOR MOUNTING HEIGHT.
- SURFACE OR PENDANT MOUNTED FLUORESCENT LIGHTING FIXTURE
- PENDANT FIXTURE
- SURFACE MOUNTED OR RECESSED EMERGENCY LIGHTING FIXTURE
- $ SINGLE POLE TOGGLE SWITCH
- $2 TWO POLE TOGGLE SWITCH
- $3 THREE-WAY TOGGLE SWITCH
- DUPLEX RECEPTACLE WITH ISOLATED GROUND
- DUPLEX RECEPTACLE
- DUPLEX RECEPTACLE: MOUNTED HORIZONTALLY U.N.O
- QUADRUPLEX RECEPTACLE
- QUADRUPLEX RECEPTACLE WITH ISOLATED GROUND
- SPECIAL PURPOSE RECEPTACLE
- SINGLE RECEPTACLE
- VOICE/DATA JUNCTION BOX
- JUNCTION BOX
- MOTOR, FAN, PUMP OR AIR CONDITIONING UNIT
- LIGHTING AND/OR POWER PANELBOARD
- DISCONNECT SWITCH, RATING AS NOTED.
- NON-FUSED DISCONNECT SWITCH, RATING AS NOTED.
- HOMERUN TO PANELBOARD
- SD CEILING MOUNTED SMOKE DETECTOR
- SP CEILING MOUNTED SPEAKER

ABBREVIATIONS

WP	WEATHERPROOF
AFF	ABOVE FINISHED FLOOR
UNO	UNLESS NOTED OTHERWISE
GFI	GROUND FAULT INTERRUPT
O.C.	ON CENTER
ETR	EXISTING TO REMAIN
PMC	PROJECT MANAGEMENT COMPANY

CONTINUITY OF SERVICE

CONTINUED OPERATION OF EXISTING ELECTRICAL SHALL BE MAINTAINED DURING RENOVATION CONSTRUCTION TO THE MAXIMUM EXTENT POSSIBLE. ANY INTERRUPTION TO NORMAL BANKING OPERATIONS SHALL BE COORDINATED WITH THE OWNERS REPRESENTATIVE (PMC) AND SHALL OCCUR ONLY WHEN APPROVED AND SCHEDULED WITH THE OWNER.

Electrical Plans Examiner

ELECTRICAL DRAWING INDEX

SHEET	DESCRIPTION
E0.0	SPECIFICATIONS, SYMBOL LEGEND AND DRAWING INDEX
E1.0	ELECTRICAL PLAN - LIGHTING
E2.0	ELECTRICAL PLAN - POWER
E3.0	ELECTRICAL PLAN - SYSTEMS
E4.0	ELECTRICAL RISER DIAGRAM AND PANEL SCHEDULES

1

INTERPLAN LLC
ARCHITECTURE
ENGINEERING
INTERIOR DESIGN
PROJECT MANAGEMENT

AA 003420
CA8660

933 LEE ROAD, FIRST FLOOR
ORLANDO, FLORIDA 32810
PH 407.645.5008
FX 407.629.9124

SEAL: MALCOLM S. GUSSO LICENSED PROFESSIONAL ENGINEER No. 16836 STATE OF FLORIDA MAY 22 2009

CONSULTANT:

REVISIONS:

NO.	DATE	REMARKS
1	06-10-09	PERMIT COMMENTS
7	03-22-10	PERMIT COMMENTS

CHASE

INTERIOR REBRANDING CONVERSION
MIAMI BEACH - ALTON ROAD
WAMU BLDG ID# 1924 CHASE STORE ID# 1742
1801 ALTON ROAD
MIAMI, FL 33139

COPYRIGHT © 2009
INTERPLAN LLC RESERVES COPYRIGHT & OTHER RIGHTS RESTRICTING THESE DOCUMENTS TO THE ORIGINAL SITE OR PURPOSE FOR WHICH THEY WERE PREPARED. REPRODUCTIONS, CHANGES OR ASSIGNMENTS ARE PROHIBITED.

PROJECT NO: 2009.0109

DATE: 04/30/2009

SPECS., SYMBOL LEGEND AND DRAWING INDEX

E0.0

DRAWN BY: SN

CHECKED BY: MGR

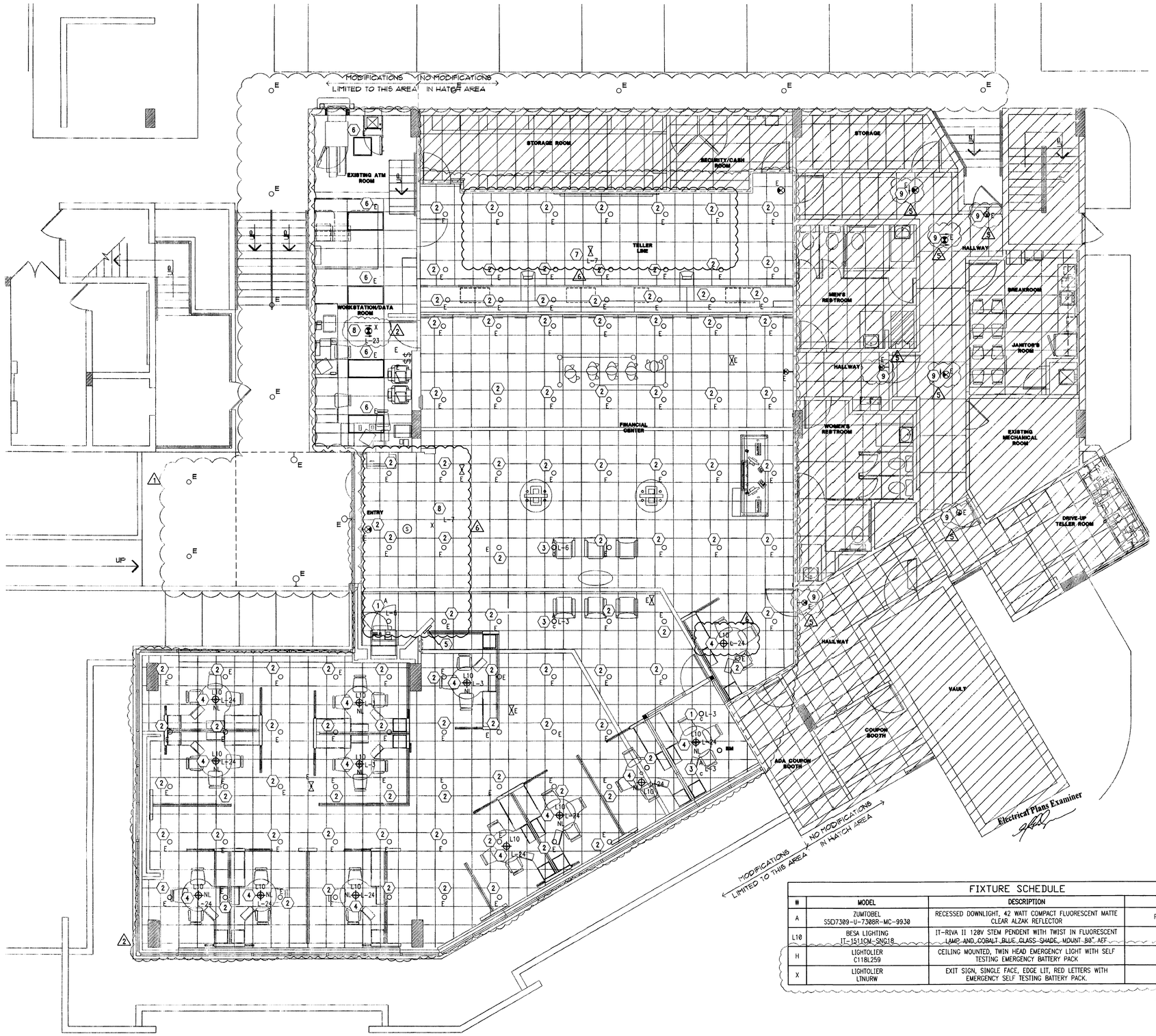

FIXTURE SCHEDULE

#	MODEL	DESCRIPTION	LAMP
A	ZUMTOBEL SSD7309-U-7308R-MC-9930	RECESSED DOWNLIGHT, 42 WATT COMPACT FLUORESCENT MATTE CLEAR ALZAK REFLECTOR	PL-T42W/30/4P/ALTO
L10	BESA LIGHTING IT-1511CM-SNG18	IT-RIVA II 120V STEM PENDENT WITH TWIST IN FLUORESCENT LAMP AND COBALT BLUE GLASS SHADE, MOUNT 80" AFF	18W LAMP
H	LIGHTOLIER C118L259	CEILING MOUNTED, TWIN HEAD EMERGENCY LIGHT WITH SELF TESTING EMERGENCY BATTERY PACK	(2) 7.2W INCLUDED
X	LIGHTOLIER L1NURW	EXIT SIGN, SINGLE FACE, EDGE LIT, RED LETTERS WITH EMERGENCY SELF TESTING BATTERY PACK.	LED INCLUDED

ELECTRICAL PLAN - LIGHTING
3/16" = 1'-0"

NORTH

LIGHTING - DEMO GENERAL NOTES

1. REFER TO ARCHITECTURAL DEMOLITION PLANS FOR EXISTING LIGHTING TO BE REMOVED OR RELOCATED.
2. ALL DEVICES SHOWN ON PLAN ARE EXISTING UNLESS OTHERWISE NOTED. REFER TO SYMBOL LEGEND FOR DEVICE DESCRIPTION.
3. EXISTING CONDITIONS SHOWN ON THIS DRAWING ARE TAKEN FROM ORIGINAL DRAWINGS AND FIELD INVESTIGATION. ALL EXISTING CONDITIONS MUST BE VERIFIED PRIOR TO BID. FIELD CONDITIONS SHALL GOVERN.
4. THE DEMOLITION PLAN IS NOT INCLUSIVE OF ALL ELECTRICAL DEVICES WITHIN THE PROJECT AREA. IT IS INTENDED TO PROVIDE THE CONTRACTOR WITH A GENERAL KNOWLEDGE OF THE EXISTING CONDITIONS WITHIN THE PROJECT AREA. ANY DISCREPANCIES OR CONDITIONS NOT SHOWN ON THIS PLAN SHALL BE BROUGHT TO THE ATTENTION OF THE ENGINEER. THE CONTRACTOR IS RESPONSIBLE FOR ALL REQUIRED DEMOLITION WHETHER SHOWN ON THE PLANS OR NOT.
5. ALL CONDUITS SERVING OTHER SPACES THAT RUN THROUGH THE PROJECT AREA SHALL REMAIN ACTIVE DURING CONSTRUCTION, SO AS NOT TO CAUSE ANY DISRUPTION TO THESE OTHER SPACES. IT IS THE CONTRACTOR'S RESPONSIBILITY TO INSURE THAT ALL CONDUITS, NEW OR EXISTING, WITHIN THE PROJECT AREA ARE PROPERLY SUPPORTED AND PROVIDED W/ BONDING BUSHINGS IN ACCORDANCE WITH THE NATIONAL ELECTRIC CODE.
6. ALL ITEMS REMOVED UNDER THIS PROJECT SHALL BE DISPOSED OF OR TURNED OVER TO THE OWNER AT THE OWNER'S DISCRETION.
7. THIS CONTRACTOR SHALL PROVIDE ELECTRICAL FOR PHASING WORK AS REQUIRED OR DIRECTED BY THE ARCHITECT, REFER TO ARCHITECTURAL PHASING PLAN. TEMPORARY ELECTRICAL SERVICES (POWER, LIGHTING, FIRE ALARM, ETC.) SHALL BE PROVIDED WHEN NEW WORK AFFECTS SERVICES NEEDING TO REMAIN ACTIVE.
8. THE CONTRACTOR SHALL INVESTIGATE THE PROJECT AREA PRIOR TO BID TO DETERMINE ALL REQUIRED DEMOLITION.
9. NO WORK BEING DONE ON EXTERIOR BUILDING DEVICES.

LIGHTING - NEW GENERAL NOTES

1. ALL FIXTURES SHALL BE CIRCUITED TO EXISTING CIRCUITS UNLESS OTHERWISE NOTED. NUMBERS INDICATE CIRCUITING. CONTRACTOR SHALL VERIFY ACTUAL CIRCUITING IN THE FIELD.
2. ALL WIRING SHALL BE IN CONDUIT. CONDUIT SIZE IS 1/2" MINIMUM UNLESS OTHERWISE NOTED. MC CABLE (MIN. 3/8") IS ALLOWED, HOWEVER, ALL HOMERUNS SHALL BE IN CONDUIT. ENT IS NOT PERMITTED. PVC IS ACCEPTABLE WHERE ALLOWED BY CODE. CONTRACTOR MAY USE EMT OR GRS AS ALLOWED BY CODE.
3. WIRE SIZE SHALL BE MINIMUM #12 AWG, THWN SOLID COPPER UNLESS OTHERWISE NOTED. PROVIDE GROUND WIRE IN ALL RACEWAYS AND ANYWHERE REQUIRED BY CODE. INCREASE WIRE SIZE TO COMPENSATE FOR VOLTAGE DROP WHERE TOTAL LENGTH OF ANY BRANCH EXCEEDS 100 FEET.
4. WIRE SIZE SHALL NOT BE LESS THAN CORRESPONDING CIRCUIT BREAKER RATING AS REQUIRED BY CODE.
5. MAXIMUM NUMBER OF UNGROUNDED CONDUCTORS IN ANY CONDUIT SHALL BE THREE. ADDITIONAL WIRES ARE ACCEPTABLE IF WIRE SIZE IS INCREASED TO ALLOW FOR DERATING PER CODE. PROVIDE ADDITIONAL WIRES FOR SWITCHING AS REQUIRED.
6. CONDUIT SHALL BE SIZED IN ACCORDANCE WITH THE NATIONAL ELECTRIC CODE.
7. TWO OR THREE LIGHTING CIRCUITS MAY SHARE A COMMON NEUTRAL.
8. VERIFY MOUNTING AND LOCATION OF ALL FIXTURES WITH ARCHITECT PRIOR TO INSTALLATION. REFER TO ARCHITECTURAL DRAWING A2.0 FOR DIMENSIONED LOCATIONS OF PENDANT FIXTURES.
9. ALL EMERGENCY LIGHTS AND EXIT SIGN BATTERY UNITS SHALL BE PROVIDED WITH UNSWITCHED HOT AND CONNECTED TO LOCAL LIGHTING CIRCUIT. PROVIDE ALL NIGHT LIGHTS WITH AN UNSWITCHED HOT.
10. CONTRACTOR SHALL CLEAN AND RE-LAMP ALL FIXTURES THAT ARE EXISTING TO REMAIN.

LIGHTING - NEW PLAN NOTES

1. EXISTING FIXTURE BEING REUSED AND RELOCATED AS SHOWN. CONNECT TO CIRCUITING AND SWITCHING AS INDICATED. CONTRACTOR IS TO FIELD VERIFY EXISTING REFLECTOR IN FIXTURE. IF FOUND TO BE THE 45° CUTOFF REFLECTOR, CONTRACTOR IS TO REPLACE IT WITH THE STANDARD DOWNLIGHT REFLECTOR #7308R FROM ZUMTOBEL. CONTRACTOR IS TO INFORM PMC OF THIS CHANGE AND RECEIVE CONSENT PRIOR TO INSTALLATION. CLEAN AND RE-LAMP FIXTURE WITH TRIPLE TUBE 42W COMPACT FLUORESCENT LAMP.
2. EXISTING FIXTURE BEING REUSED. EXISTING CIRCUITING AND SWITCHING TO REMAIN. CONTRACTOR IS TO FIELD VERIFY EXISTING REFLECTOR IN FIXTURE. IF FOUND TO BE THE 45° CUTOFF REFLECTOR, CONTRACTOR IS TO REPLACE IT WITH THE STANDARD DOWNLIGHT REFLECTOR #7308R FROM ZUMTOBEL. CONTRACTOR IS TO INFORM PMC OF THIS CHANGE AND RECEIVE CONSENT PRIOR TO INSTALLATION. CLEAN AND RE-LAMP FIXTURE WITH TRIPLE TUBE 42W COMPACT FLUORESCENT LAMP.
3. PROVIDE NEW RECESSED DOWNLIGHT PER FIXTURE SCHEDULE. CONNECT TO CIRCUITING AND SWITCHING AS INDICATED.
4. PROVIDE NEW PENDANT FIXTURE AS SHOWN. REFER TO FIXTURE SCHEDULE FOR MOUNTING HEIGHT. COORDINATE WITH ARCHITECTURAL PLANS. CONNECT TO CIRCUITING AS INDICATED. PENDANTS SHALL OPERATE AS NIGHT LIGHTING.
5. EXISTING SWITCHBANK TO REMAIN.
6. EXISTING FIXTURE BEING RE-USED. EXISTING CIRCUITING AND SWITCHING TO REMAIN. CONTRACTOR IS TO CLEAN AND RE-LAMP ALL FIXTURES.
7. EXISTING EMERGENCY FIXTURE BEING REUSED AND/OR RELOCATED AS SHOWN. CONNECT TO CIRCUITING AS INDICATED. PROVIDE UNSWITCHED HOT TO BATTERY PACK. CLEAN AND RE-LAMP FIXTURE IF NECESSARY.
8. PROVIDE NEW EMERGENCY FIXTURE AS SHOWN. CONNECT TO CIRCUITING AS INDICATED. PROVIDE UNSWITCHED HOT TO BATTERY PACK.
9. EXISTING EXIT LIGHT LOCATION. CC TO FIELD VERIFY IF EXISTING LIGHT EXISTS. IF LIGHT DOES NOT EXIST, INSTALL AS LOCATED OR AS DIRECTED BY FIRE MARSHAL.

INTERPLAN LLC
ARCHITECTURE
ENGINEERING
INTERIOR DESIGN
PROJECT MANAGEMENT

AA 003420
CA8660

933 LEE ROAD, FIRST FLOOR
ORLANDO, FLORIDA 32810
PH 407.645.5008
FX 407.629.9124

SEAL:

MARCO W. G. RUSSO
LICENSE NO. 16636
STATE OF FLORIDA
PROFESSIONAL ENGINEER

CONSULTANT:

REVISIONS:

NO.	DATE	REMARKS
1	6-10-09	PERMIT COMMENTS
2	6-10-09	OWNER REVISIONS
5	10-05-09	PERMIT COMMENTS
6	12-03-09	OWNER REVISIONS

CHASE

INTERIOR REBRANDING CONVERSION
MIAMI BEACH - ALTON ROAD
WAMU BLDG ID# 1924 CHASE SIORE ID# 1742
1801 ALTON ROAD
MIAMI, FL 33139

COPYRIGHT © 2009
INTERPLAN LLC RESERVES
COPYRIGHT & OTHER RIGHTS
RESTRICTING THESE DOCUMENTS
TO THE ORIGINAL SITE OR
PURPOSE FOR WHICH THEY WERE
PREPARED. REPRODUCTIONS,
CHANGES OR ASSIGNMENTS ARE
PROHIBITED.

PROJECT NO: 2009.0109

DATE: 04/30/2009

ELECTRICAL PLAN-
LIGHTING

E1.0

DRAWN BY: SN

CHECKED BY: MGR

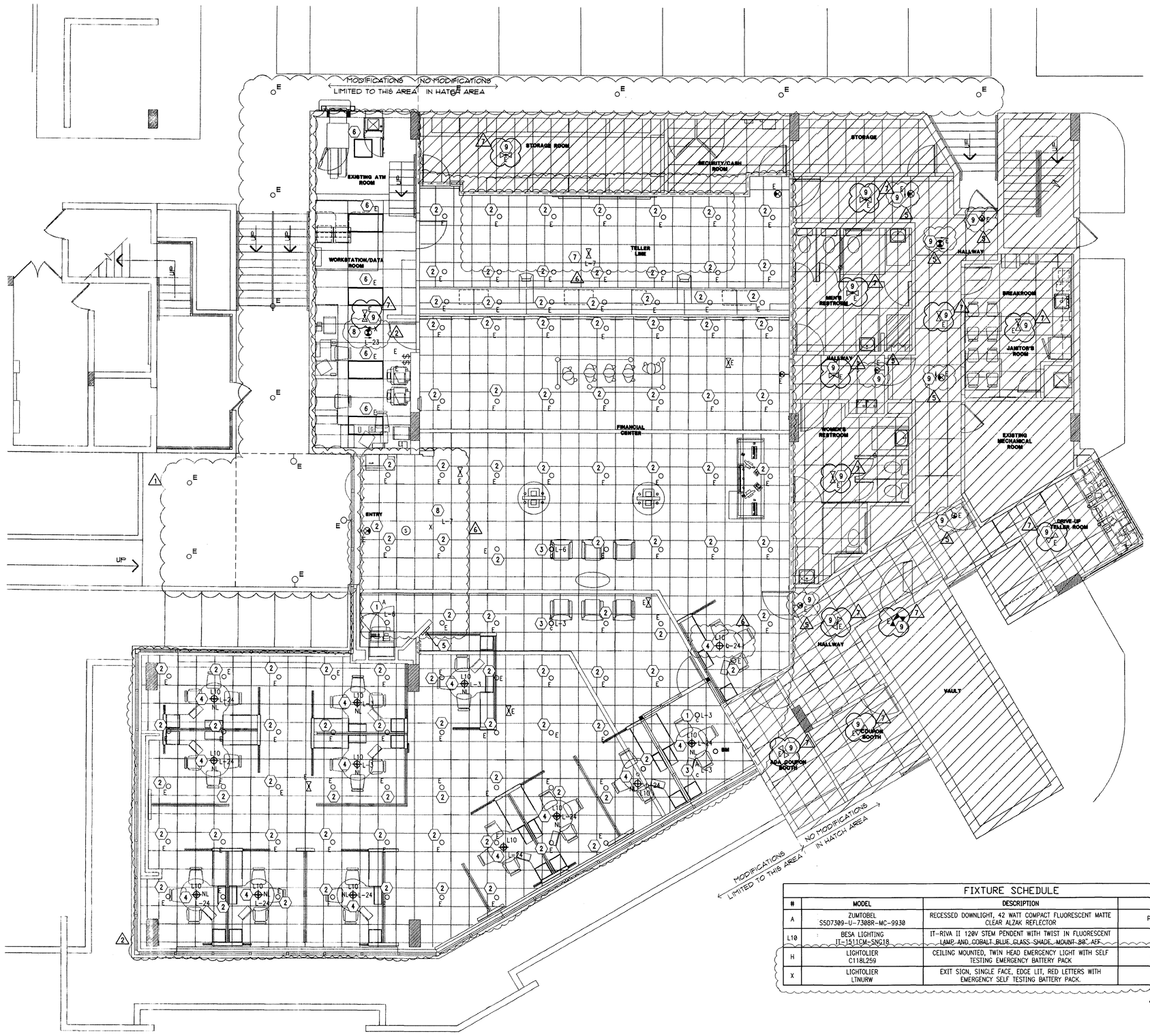

FIXTURE SCHEDULE			
#	MODEL	DESCRIPTION	LAMP
A	ZUMTOBEL S5D7309-U-7308R-MC-9930	RECESSED DOWNLIGHT, 42 WATT COMPACT FLUORESCENT MATTE CLEAR ALZAK REFLECTOR	PL-T42W/30/4P/ALTO
L10	BESA LIGHTING IT-1511CM-SNG18	IT-RIVA II 120V STEM PENDENT WITH TWIST IN FLUORESCENT LAMP AND COBALT BLUE GLASS SHADE. MOUNT 80" AFF.	18W LAMP
H	LIGHTOLIER C118L259	CEILING MOUNTED, TWIN HEAD EMERGENCY LIGHT WITH SELF TESTING EMERGENCY BATTERY PACK	(2) 7.2W INCLUDED
X	LIGHTOLIER LTNURW	EXIT SIGN, SINGLE FACE, EDGE LIT, RED LETTERS WITH EMERGENCY SELF TESTING BATTERY PACK.	LED INCLUDED

ELECTRICAL PLAN - LIGHTING
3/16" = 1'-0"

NORTH

LIGHTING - DEMO GENERAL NOTES

1. REFER TO ARCHITECTURAL DEMOLITION PLANS FOR EXISTING LIGHTING TO BE REMOVED OR RELOCATED.
2. ALL DEVICES SHOWN ON PLAN ARE EXISTING UNLESS OTHERWISE NOTED. REFER TO SYMBOL LEGEND FOR DEVICE DESCRIPTION.
3. EXISTING CONDITIONS SHOWN ON THIS DRAWING ARE TAKEN FROM ORIGINAL DRAWINGS AND FIELD INVESTIGATION. ALL EXISTING CONDITIONS MUST BE VERIFIED PRIOR TO BID. FIELD CONDITIONS SHALL GOVERN.
4. THE DEMOLITION PLAN IS NOT INCLUSIVE OF ALL ELECTRICAL DEVICES WITHIN THE PROJECT AREA. IT IS INTENDED TO PROVIDE THE CONTRACTOR WITH A GENERAL KNOWLEDGE OF THE EXISTING CONDITIONS WITHIN THE PROJECT AREA. ANY DISCREPANCIES OR CONDITIONS NOT SHOWN ON THIS PLAN SHALL BE BROUGHT TO THE ATTENTION OF THE ENGINEER. THE CONTRACTOR IS RESPONSIBLE FOR ALL REQUIRED DEMOLITION WHETHER SHOWN ON THE PLANS OR NOT.
5. ALL CONDUITS SERVING OTHER SPACES THAT RUN THROUGH THE PROJECT AREA SHALL REMAIN ACTIVE DURING CONSTRUCTION, SO AS NOT TO CAUSE ANY DISRUPTION TO THESE OTHER SPACES. IT IS THE CONTRACTOR'S RESPONSIBILITY TO INSURE THAT ALL CONDUITS, NEW OR EXISTING, WITHIN THE PROJECT AREA ARE PROPERLY SUPPORTED AND PROVIDED W/ BONDING BUSHINGS IN ACCORDANCE WITH THE NATIONAL ELECTRIC CODE.
6. ALL ITEMS REMOVED UNDER THIS PROJECT SHALL BE DISPOSED OF OR TURNED OVER TO THE OWNER AT THE OWNER'S DISCRETION.
7. THIS CONTRACTOR SHALL PROVIDE ELECTRICAL FOR PHASING WORK AS REQUIRED OR DIRECTED BY THE ARCHITECT, REFER TO ARCHITECTURAL PHASING PLAN. TEMPORARY ELECTRICAL SERVICES (POWER, LIGHTING, FIRE ALARM, ETC.) SHALL BE PROVIDED WHEN NEW WORK AFFECTS SERVICES NEEDING TO REMAIN ACTIVE.
8. THE CONTRACTOR SHALL INVESTIGATE THE PROJECT AREA PRIOR TO BID TO DETERMINE ALL REQUIRED DEMOLITION.
9. NO WORK BEING DONE ON EXTERIOR BUILDING DEVICES.

LIGHTING - NEW GENERAL NOTES

1. ALL FIXTURES SHALL BE CIRCUITED TO EXISTING CIRCUITS UNLESS OTHERWISE NOTED. NUMBERS INDICATE CIRCUITING. CONTRACTOR SHALL VERIFY ACTUAL CIRCUITING IN THE FIELD.
2. ALL WIRING SHALL BE IN CONDUIT. CONDUIT SIZE IS 1/2" MINIMUM UNLESS OTHERWISE NOTED. MC CABLE (MIN. 3/8") IS ALLOWED, HOWEVER, ALL HOMERUNS SHALL BE IN CONDUIT. ENT IS NOT PERMITTED. PVC IS ACCEPTABLE WHERE ALLOWED BY CODE. CONTRACTOR MAY USE EMT OR GRS AS ALLOWED BY CODE.
3. WIRE SIZE SHALL BE MINIMUM #12 AWG, THWN SOLID COPPER UNLESS OTHERWISE NOTED. PROVIDE GROUND WIRE IN ALL RACEWAYS AND ANYWHERE REQUIRED BY CODE. INCREASE WIRE SIZE TO COMPENSATE FOR VOLTAGE DROP WHERE TOTAL LENGTH OF ANY BRANCH EXCEEDS 100 FEET.
4. WIRE SIZE SHALL NOT BE LESS THAN CORRESPONDING CIRCUIT BREAKER RATING AS REQUIRED BY CODE.
5. MAXIMUM NUMBER OF UNGROUNDED CONDUCTORS IN ANY CONDUIT SHALL BE THREE. ADDITIONAL WIRES ARE ACCEPTABLE IF WIRE SIZE IS INCREASED TO ALLOW FOR DERATING PER CODE. PROVIDE ADDITIONAL WIRES FOR SWITCHING AS REQUIRED.
6. CONDUIT SHALL BE SIZED IN ACCORDANCE WITH THE NATIONAL ELECTRIC CODE.
7. TWO OR THREE LIGHTING CIRCUITS MAY SHARE A COMMON NEUTRAL.
8. VERIFY MOUNTING AND LOCATION OF ALL FIXTURES WITH ARCHITECT PRIOR TO INSTALLATION. REFER TO ARCHITECTURAL DRAWING A2.0 FOR DIMENSIONED LOCATIONS OF PENDANT FIXTURES.
9. ALL EMERGENCY LIGHTS AND EXIT SIGN BATTERY UNITS SHALL BE PROVIDED WITH UNSWITCHED HOT AND CONNECTED TO LOCAL LIGHTING CIRCUIT. PROVIDE ALL NIGHT LIGHTS WITH AN UNSWITCHED HOT.
10. CONTRACTOR SHALL CLEAN AND RE-LAMP ALL FIXTURES THAT ARE EXISTING TO REMAIN.

LIGHTING - NEW PLAN NOTES

1. EXISTING FIXTURE BEING REUSED AND RELOCATED AS SHOWN. CONNECT TO CIRCUITING AND SWITCHING AS INDICATED. CONTRACTOR IS TO FIELD VERIFY EXISTING REFLECTOR IN FIXTURE. IF FOUND TO BE THE 45° CUTOFF REFLECTOR, CONTRACTOR IS TO REPLACE IT WITH THE STANDARD DOWNLIGHT REFLECTOR #7308R FROM ZUMTOBEL. CONTRACTOR IS TO INFORM PMC OF THIS CHANGE AND RECEIVE CONSENT PRIOR TO INSTALLATION. CLEAN AND RE-LAMP FIXTURE WITH TRIPLE TUBE 42W COMPACT FLUORESCENT LAMP.
2. EXISTING FIXTURE BEING REUSED. EXISTING CIRCUITING AND SWITCHING TO REMAIN. CONTRACTOR IS TO FIELD VERIFY EXISTING REFLECTOR IN FIXTURE. IF FOUND TO BE THE 45° CUTOFF REFLECTOR, CONTRACTOR IS TO REPLACE IT WITH THE STANDARD DOWNLIGHT REFLECTOR #7308R FROM ZUMTOBEL. CONTRACTOR IS TO INFORM PMC OF THIS CHANGE AND RECEIVE CONSENT PRIOR TO INSTALLATION. CLEAN AND RE-LAMP FIXTURE WITH TRIPLE TUBE 42W COMPACT FLUORESCENT LAMP.
3. PROVIDE NEW RECESSED DOWNLIGHT PER FIXTURE SCHEDULE. CONNECT TO CIRCUITING AND SWITCHING AS INDICATED.
4. PROVIDE NEW PENDANT FIXTURE AS SHOWN. REFER TO FIXTURE SCHEDULE FOR MOUNTING HEIGHT. COORDINATE WITH ARCHITECTURAL PLANS. CONNECT TO CIRCUITING AS INDICATED. PENDANTS SHALL OPERATE AS NIGHT LIGHTING.
5. EXISTING SWITCHBANK TO REMAIN.
6. EXISTING FIXTURE BEING RE-USED. EXISTING CIRCUITING AND SWITCHING TO REMAIN. CONTRACTOR IS TO CLEAN AND RE-LAMP ALL FIXTURES.
7. EXISTING EMERGENCY FIXTURE BEING REUSED AND/OR RELOCATED AS SHOWN. CONNECT TO CIRCUITING AS INDICATED. PROVIDE UNSWITCHED HOT TO BATTERY PACK. CLEAN AND RE-LAMP FIXTURE IF NECESSARY.
8. PROVIDE NEW EMERGENCY FIXTURE AS SHOWN. CONNECT TO CIRCUITING AS INDICATED. PROVIDE UNSWITCHED HOT TO BATTERY PACK.
9. EXISTING EXIT/EMERGENCY LIGHT LOCATION. GC TO FIELD VERIFY IF EXISTING LIGHT EXISTS. IF LIGHT DOES NOT EXIST, INSTALL AS LOCATED OR AS DIRECTED BY FIRE MARSHAL.

Electrical Plans Examiner

INTERPLAN LLC
ARCHITECTURE
ENGINEERING
INTERIOR DESIGN
PROJECT MANAGEMENT

AA 003420
CA8660

933 LEE ROAD, FIRST FLOOR
ORLANDO, FLORIDA 32810
PH 407.645.5008
FX 407.629.9124

SEAL:

CONSULTANT:

REVISIONS:

NO.	DATE	REMARKS
1	6-10-09	PERMIT COMMENTS
2	6-10-09	OWNER REVISIONS
5	10-05-09	PERMIT COMMENTS
6	12-03-09	OWNER REVISIONS
7	03-22-10	PERMIT COMMENTS

CHASE

INTERIOR REBRANDING CONVERSION
MIAMI BEACH - ALTON ROAD
WAMU BLDG D# 1924 CHASE STORE D# 1742
1801 ALTON ROAD
MIAMI, FL 33139

COPYRIGHT © 2009
INTERPLAN LLC RESERVEC
COPYRIGHT & OTHER RIGHTS
RESTRICTING THESE DOCUMENTS
TO THE ORIGINAL SITE OR
PURPOSE FOR WHICH THEY WERE
PREPARED. REPRODUCTIONS,
CHANGES OR ASSIGNMENTS ARE
PROHIBITED.

PROJECT NO: 2009.0109

DATE: 04/30/2009

ELECTRICAL PLAN-
LIGHTING

E1.0

DRAWN BY: SN

CHECKED BY: MGR

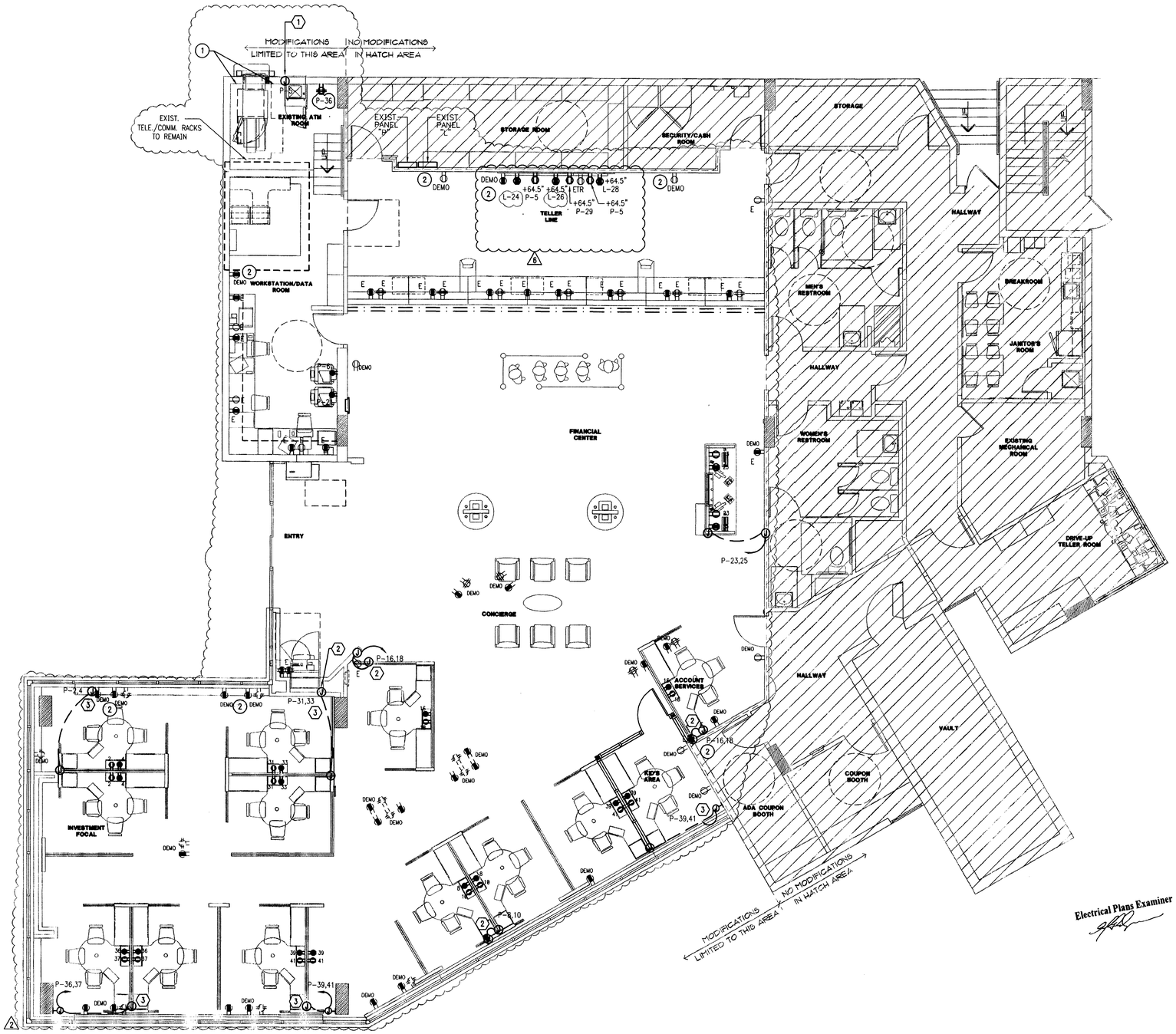

Electrical Plans Examiner

ELECTRICAL PLAN - POWER
3/16" = 1'-0"

NORTH

POWER - DEMO GENERAL NOTES

1. REFER TO ARCHITECTURAL DEMOLITION PLANS FOR EXISTING ITEMS TO BE REMOVED OR RELOCATED. REMOVE ASSOCIATED ELECTRICAL.
2. REMOVE ALL DEVICES, JUNCTION BOXES (IF POSSIBLE), CONDUIT (IF NECESSARY) AND WIRING BACK TO NEAREST JUNCTION BOX THAT IS TO REMAIN IN ALL AREAS BEING DEMOLISHED OR RENOVATED UNLESS OTHERWISE NOTED. FLOOR BOXES AND CONDUIT IN FLOOR SLAB WILL NOT BE REMOVED. TURN OVER ALL REMOVED MATERIALS TO OWNER AT OWNER'S DISCRETION.
3. ALL DEVICES SHOWN ON PLAN ARE EXISTING UNLESS OTHERWISE NOTED. REFER TO SYMBOL LEGEND FOR DEVICE DESCRIPTION.
4. EXISTING CONDITIONS SHOWN ON THIS DRAWING ARE TAKEN FROM ORIGINAL DRAWINGS AND FIELD INVESTIGATION. ALL EXISTING CONDITIONS MUST BE VERIFIED PRIOR TO BID. FIELD CONDITIONS SHALL GOVERN.
5. THE DEMOLITION PLAN IS NOT INCLUSIVE OF ALL ELECTRICAL DEVICES WITHIN THE PROJECT AREA. IT IS INTENDED TO PROVIDE THE CONTRACTOR WITH A GENERAL KNOWLEDGE OF THE EXISTING CONDITIONS WITHIN THE PROJECT AREA. ANY DISCREPANCIES OR CONDITIONS NOT SHOWN ON THIS PLAN SHALL BE BROUGHT TO THE ATTENTION OF THE PMC. THE CONTRACTOR IS RESPONSIBLE FOR ALL REQUIRED DEMOLITION WHETHER SHOWN ON THE PLANS OR NOT.
6. ALL CONDUITS SERVING OTHER SPACES, THAT RUN THROUGH THE PROJECT AREA SHALL REMAIN ACTIVE DURING CONSTRUCTION, SO AS NOT TO CAUSE ANY DISRUPTION TO THESE OTHER SPACES. IT IS THE CONTRACTOR'S RESPONSIBILITY TO INSURE THAT ALL CONDUITS, NEW OR EXISTING, WITHIN THE PROJECT AREA ARE PROPERLY SUPPORTED AND PROVIDED W/ BONDING BUSHINGS IN ACCORDANCE WITH THE NATIONAL ELECTRIC CODE.
7. ALL ITEMS REMOVED UNDER THIS PROJECT SHALL BE DISPOSED OF OR TURNED OVER TO THE OWNER AT THE OWNER'S DISCRETION.
8. THIS CONTRACTOR SHALL PROVIDE ELECTRICAL FOR PHASING WORK AS REQUIRED OR AS DIRECTED BY THE ARCHITECT. REFER TO ARCHITECTURAL PHASING PLAN. TEMPORARY ELECTRICAL SERVICES (POWER, LIGHTING, FIRE ALARM, ETC.) SHALL BE PROVIDED WHEN NEW WORK AFFECTS SERVICES NEEDING TO REMAIN ACTIVE.
9. THE CONTRACTOR SHALL INVESTIGATE THE PROJECT AREA PRIOR TO BID TO DETERMINE ALL REQUIRED DEMOLITION.
10. NO WORK BEING DONE ON EXTERIOR BUILDING DEVICES.

POWER - DEMO PLAN NOTES (−)

(1) RELOCATE POWER ON THIS WALL AS NECESSARY TO AVOID CONFLICTS DUE TO WALL RENOVATION. REUTILIZE EXISTING OUTLET AND CIRCUIT.

(2) DEVICE TO BE REMOVED. REMOVE WIRING BACK TO NEAREST JUNCTION BOX THAT IS TO REMAIN. PROVIDE BLANK COVER AND PATCH TO MATCH SURROUNDING WALL. COORDINATE WITH ARCHITECTURAL.

POWER - NEW GENERAL NOTES

1. ALL OUTLETS AND EQUIPMENT SHALL BE CIRCUITED TO EXISTING CIRCUITS UNLESS OTHERWISE NOTED. NUMBERS INDICATE CIRCUITING. CONTRACTOR SHALL VERIFY ACTUAL CIRCUITS IN THE FIELD.
2. CONTRACTOR SHALL INTERCEPT AND EXTEND CONDUIT AND WIRING FOR ALL CIRCUITS BEING RE-USED TO NEW DEVICE LOCATIONS AS NECESSARY.
3. ALL WIRING SHALL BE IN CONDUIT. CONDUIT SIZE IS 1/2" MINIMUM UNLESS OTHERWISE NOTED. MC CABLE (MIN. 3/8") IS ALLOWED, HOWEVER, ALL HOMERUNS SHALL BE IN CONDUIT. ENT IS NOT PERMITTED. PVC IS ACCEPTABLE WHERE ALLOWED BY CODE. CONTRACTOR MAY USE EMT OR GRS AS ALLOWED BY CODE.
4. WIRE SIZE SHALL BE MINIMUM #12 AWG, THWN SOLID COPPER UNLESS OTHERWISE NOTED. PROVIDE GROUND WIRE IN ALL RACEWAYS AND ANYWHERE REQUIRED BY CODE. INCREASE WIRE SIZE TO COMPENSATE FOR VOLTAGE DROP WHERE TOTAL LENGTH OF ANY BRANCH EXCEEDS 100 FEET.
5. WIRE SIZE SHALL NOT BE LESS THAN CORRESPONDING CIRCUIT BREAKER RATING AS REQUIRED BY CODE.
6. MAXIMUM NUMBER OF UNGROUNDED CONDUCTORS IN ANY CONDUIT SHALL BE THREE. ADDITIONAL WIRES ARE ACCEPTABLE IF WIRE SIZE IS INCREASED TO ALLOW FOR DERATING PER CODE. PROVIDE ADDITIONAL WIRES FOR SWITCHING AS REQUIRED.
7. CONDUIT SHALL BE SIZED IN ACCORDANCE WITH THE NATIONAL ELECTRIC CODE.
8. EACH RECEPTACLE CIRCUIT DOES NOT REQUIRE A DEDICATED NEUTRAL. SHARED NEUTRALS ARE ALLOWED EXCEPT FOR ISOLATED GROUND CIRCUITS.
9. VERIFY MOUNTING AND LOCATION OF ALL OUTLETS WITH ARCHITECT PRIOR TO INSTALLATION.
10. REFER TO DETAIL 1 SHEET E0.0 FOR ISOLATED GROUND RECEPTACLE DETAILS.

POWER - NEW PLAN NOTES (+)

(1) JUNCTION BOX FOR BLUE GLOWING WALL SURROUNDING ATM. VERIFY EXACT ELECTRICAL REQUIREMENTS WITH EQUIPMENT VENDOR. COORDINATE WITH ARCHITECTURAL.

(2) JUNCTION BOX FOR CONNECTION OF POWER TO PRE-WIRED WORKSTATION. COORDINATE ACTUAL ELECTRICAL CONNECTION WITH FURNITURE INSTALLATION REQUIREMENTS.

(3) JUNCTION BOX FOR CONNECTION OF POWER TO PRE-WIRED WORKSTATION. COORDINATE ACTUAL ELECTRICAL CONNECTION WITH FURNITURE INSTALLATION REQUIREMENTS. SAW AND CUT AND PATCH AS NECESSARY.

INTERPLAN LLC
ARCHITECTURE
ENGINEERING
INTERIOR DESIGN
PROJECT MANAGEMENT

AA 003420
CA8660

933 LEE ROAD, FIRST FLOOR
ORLANDO, FLORIDA 32810
PH 407.645.5008
FX 407.629.9124

SEAL:

CONSULTANT:

REVISIONS:

NO.	DATE	REMARKS
1	6-18-09	PERMIT COMMENTS
2	6-18-09	OWNER REVISIONS
6	12-03-09	OWNER REVISIONS

CHASE

INTERIOR REBRANDING CONVERSION
MIAMI BEACH - ALTON ROAD
WAMU BLDG ID# 1924 CHAS: SIOKE ID# 1742
1801 ALTON ROAD
MIAMI, FL 33139

COPYRIGHT © 2009
INTERPLAN LLC RESERVES COPYRIGHT & OTHER RIGHTS RESTRICTING THESE DOCUMENTS TO THE ORIGINAL SITE OR PURPOSE FOR WHICH THEY WERE PREPARED. REPRODUCTIONS, CHANGES, OR ASSIGNMENTS ARE PROHIBITED.

PROJECT NO: 2009.0109
DATE: 04/30/2009

ELECTRICAL PLAN-POWER

E2.0

DRAWN BY: SN
CHECKED BY: MGR

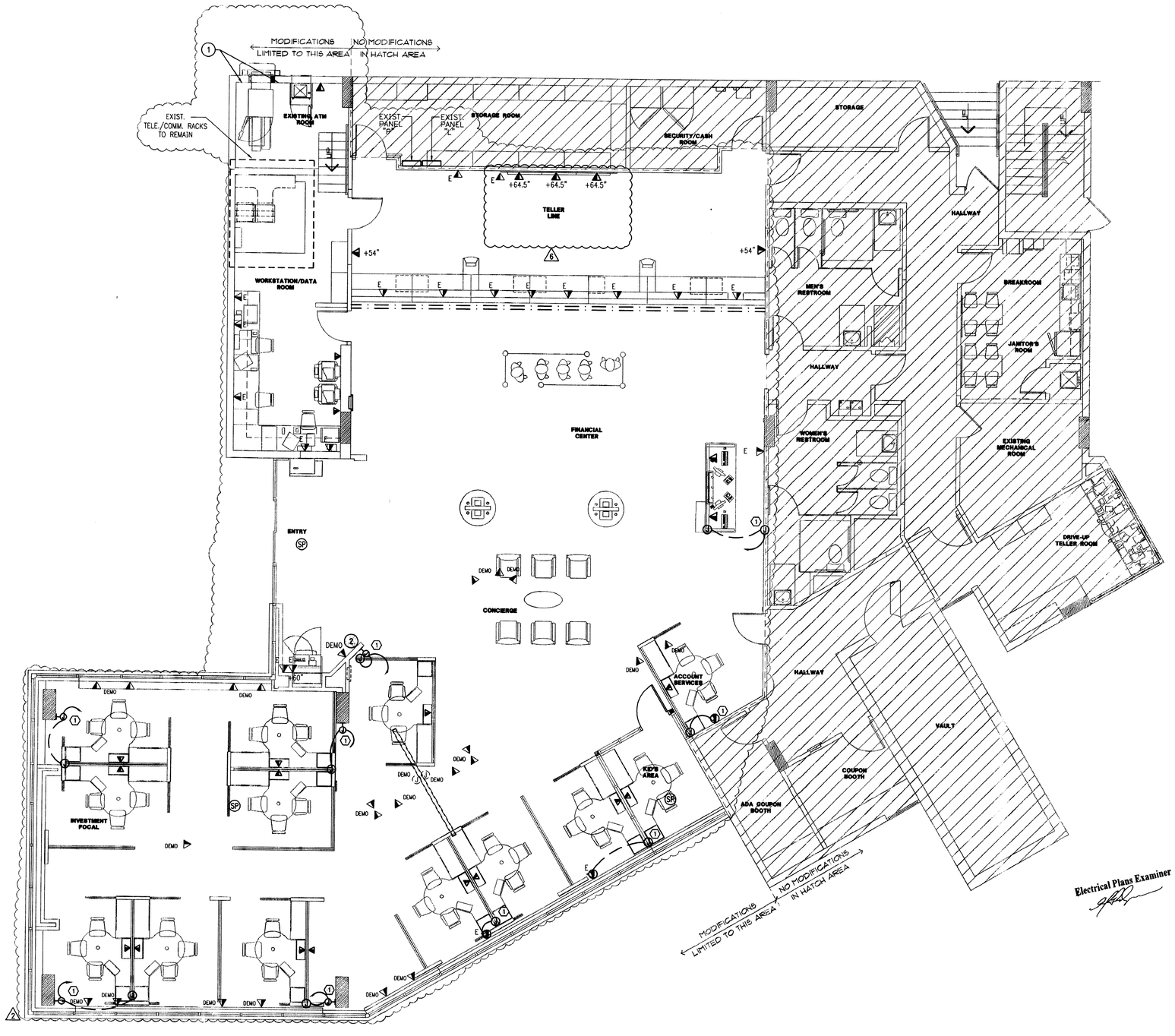

Electrical Plans Examiner

ELECTRICAL PLAN - SYSTEMS
3/16" = 1'-0"

NORTH

SYSTEM - DEMO GENERAL NOTES

1. REFER TO ARCHITECTURAL DEMOLITION PLANS FOR EXISTING TO BE REMOVED OR RELOCATED. REMOVE ASSOCIATED SYSTEMS DEVICES AND WIRING.
2. REMOVE ALL DEVICES, JUNCTION BOXES (IF POSSIBLE), CONDUIT (IF NECESSARY) AND WIRING BACK TO NEAREST JUNCTION BOX THAT IS TO REMAIN IN ALL AREAS BEING DEMOLISHED OR RENOVATED UNLESS OTHERWISE NOTED. FLOOR BOXES AND CONDUIT IN FLOOR SLAB WILL NOT BE REMOVED. TURN OVER ALL REMOVED MATERIALS TO OWNER AT OWNER'S DISCRETION.
3. ALL DEVICES SHOWN ON PLAN ARE EXISTING. REFER TO SYMBOL LEGEND FOR DEVICE DESCRIPTION.
4. EXISTING CONDITIONS SHOWN ON THIS DRAWING ARE TAKEN FROM ORIGINAL DRAWINGS AND FIELD INVESTIGATION. ALL EXISTING CONDITIONS MUST BE VERIFIED PRIOR TO BID. FIELD CONDITIONS SHALL GOVERN.
5. THE DEMOLITION PLAN IS NOT INCLUSIVE OF ALL ELECTRICAL DEVICES WITHIN THE PROJECT AREA. IT IS INTENDED TO PROVIDE THE CONTRACTOR WITH A GENERAL KNOWLEDGE OF THE EXISTING CONDITIONS WITHIN THE PROJECT AREA. ANY DISCREPANCIES OR CONDITIONS NOT SHOWN ON THIS PLAN SHALL BE BROUGHT TO THE ATTENTION OF THE PMC. THE CONTRACTOR IS RESPONSIBLE FOR ALL REQUIRED DEMOLITION WHETHER SHOWN ON THE PLANS OR NOT.
6. ALL CONDUITS SERVING OTHER SPACES THAT RUN THROUGH THE PROJECT AREA SHALL REMAIN ACTIVE DURING CONSTRUCTION SO AS NOT TO CAUSE ANY DISRUPTION TO THESE OTHER SPACES. IT IS THE CONTRACTOR'S RESPONSIBILITY TO INSURE THAT ALL CONDUITS, NEW OR EXISTING, WITHIN THE PROJECT AREA ARE PROPERLY SUPPORTED AND PROVIDED W/ BONDING BUSHINGS IN ACCORDANCE WITH THE NATIONAL ELECTRIC CODE.
7. ALL ITEMS REMOVED UNDER THIS PROJECT SHALL BE DISPOSED OF OR TURNED OVER TO THE OWNER AT THE OWNER'S DISCRETION.
8. THIS CONTRACTOR SHALL PROVIDE ELECTRICAL FOR PHASING WORK AS REQUIRED OR DIRECTED BY THE ARCHITECT, REFER TO ARCHITECTURAL PHASING PLAN. TEMPORARY ELECTRICAL SERVICES (POWER, LIGHTING, FIRE ALARM, ETC.) SHALL BE PROVIDED WHEN NEW WORK AFFECTS SERVICES NEEDING TO REMAIN ACTIVE.
9. THE CONTRACTOR SHALL INVESTIGATE THE PROJECT AREA PRIOR TO BID TO DETERMINE ALL REQUIRED DEMOLITION.

SYSTEM - DEMO PLAN NOTES

1. RELOCATE TELE./COMM. ON THIS WALL AS NECESSARY TO AVOID CONFLICTS DUE TO WALL RENOVATION. REUTILIZE EXISTING OUTLETS.
2. DEVICE TO BE REMOVED. REMOVE WIRING BACK TO NEAREST JUNCTION BOX THAT IS TO REMAIN. PROVIDE BLANK COVER AND PATCH TO MATCH SURROUNDING WALL. COORDINATE WITH ARCHITECTURAL.

SYSTEMS - NEW GENERAL NOTES

1. ALL SYSTEMS DEVICE LOCATIONS SHOWN ON PLAN SHALL CONSIST OF JUNCTION BOX AND CONDUIT ONLY. DEVICE, FACEPLATE AND WIRING TO BE PROVIDED BY OTHERS.
2. ALL SYSTEMS CONDUITS IN WALL SHALL BE MINIMUM 1" C, STUBBED UP AT LEAST 6" ABOVE TOP OF ACCESSIBLE CEILING GRID AND PROVIDED WITH A 90° BEND TOWARD SYSTEMS RACKS AND END BUSHINGS.
3. VERIFY MOUNTING AND LOCATION OF ALL OUTLETS WITH ARCHITECT PRIOR TO INSTALLATION.

SYSTEMS - NEW PLAN NOTES

1. JUNCTION BOX AND/OR CONDUIT IN FLOOR FOR FEED TO WORKSTATION. ROUTE 1" CONDUIT DOWN COLUMN INTO JUNCTION BOX OR SLAB. SAWCUT AND PATCH SLAB AS NECESSARY. COORDINATE CONNECTION WITH FURNITURE INSTALLATION REQUIREMENTS.

INTERPLAN LLC
ARCHITECTURE
ENGINEERING
INTERIOR DESIGN
PROJECT MANAGEMENT
CA0003120
CA8675
933 LEE ROAD, FIRST FLOOR
ORLANDO, FLORIDA 32810
PH 407.645.5008
FX 407.629.9124

SEAL:

MALCOLM G. RUSSO
LICENSE NUMBER
STATE OF FLORIDA
PROFESSIONAL ENGINEER
DEC 10 2009

CONSULTANT:

REVISIONS:

NO.	DATE	REMARKS
2	6-10-09	OWNER REVISIONS
6	12-03-09	OWNER REVISIONS

CHASE

INTERIOR REBRANDING CONVERSION
MIAMI BEACH - ALTON ROAD
WAMU BLDG D# 1924 CHASE SOURCE ID# 1742
1801 ALTON ROAD
MIAMI, FL 33139

COPYRIGHT © 2009
INTERPLAN LLC RESERVES COPYRIGHT & OTHER RIGHTS RESTRICTING THESE DOCUMENTS TO THE ORIGINAL SITE OR PURPOSE FOR WHICH THEY WERE PREPARED. REPRODUCTIONS, CHANGES OR ASSIGNMENTS ARE PROHIBITED.

PROJECT NO: 2009.0109

DATE: 04/30/2009

ELECTRICAL PLAN-SYSTEMS

E3.0

DRAWN BY: SN

CHECKED BY: MGR

1801 ALTON ROAD.
B09029 23/BMS1000950

In addition to the requirement of this permit there may be additional restrictions applicable to this property that may be found in the recorded covenants, or Public Records of this County and there may be additional permits required from other government entities such as water management districts, state agencies, or federal agencies. The City does not assume any responsibility for accuracy of or compliance with covenants or restrictions which are recorded. These plans are approved subject to compliance with the Miami-Dade County Zoning, Code, and Labor Laws, Rules, and Regulations.

OFFICE COPY
CITY OF MIAMI BEACH
APPROVED FOR ISSUANCE
THE FOLLOWING
BUILDING
ROOF
CONSTRUCTION
FIRE
LA
FIRE
ENGINEERING
PUBLIC WORKS
STRUCTURAL
ELEVATOR

MIAMIBEACH
BUILDING DEPARTMENT
1700 Convention Center Drive, 2nd Floor
Miami Beach, Fl, 33139
Phone: (305) 673-7610 Fax: (305) 673-7857

Owner/ Qualifier / Contractor Estimate Construction Cost Affidavit
(To be submitted for the main/master permits or the stand alone permits)

Permit Number: B1103915 **Date:** 08-11-11

Job Address: 1801 Alton Rd, M.B. **Folio No.:** 02-3233-012-0090

The construction cost should include the work under the main Permit and all associated permits.

Part I: FEMA 50% Related Construction Cost		
Items to be excluded from Estimate Construction Cost for Part I (FEMA 50% Related Construction Cost): *Plan and Specification, Survey Cost, Permit Fees, Swimming Pools, detached structures (garages, storages, cabanas), Landscaping, Fences, Yard light , Not Built-ins Appliances and Furniture.*		
Estimated Construction Cost	**General Contractor Cost**	**Owner Cost**
Demolition & Removal	$12,000	
Building & Structural Elements	$10,000	
Roofing	—	
Doors & Windows	$15,000	
Railing	—	
Interior Finish, Floor Covering, Painting	$80,000	
Cabinets and Furniture-Built-Ins	$8,000	
Appliances-Built-Ins	—	
Other Building related Items	—	
Electrical including Fixtures	$140,000	
Elevator	—	
Mechanical-HVAC-equipments	$15,000	
Plumbing including Fixtures	—	
Overhead and Profit	$20,000	
Sub Total Construction Cost	$ $200,000	$
Sub Total Construction Cost Estimate for FEMA 50% Rule Purposes	$	

MIAMIBEACH
BUILDING DEPARTMENT
1700 Convention Center Drive, 2nd Floor
Miami Beach, Fl, 33139
Phone: (305) 673-7610 Fax: (305) 673-7857

Part II: Non Related FEMA 50% Construction Cost		
Estimated Construction Cost	**General Contractor Cost**	**Owner Cost**
Swimming Pools	—	
Fences, Pavers, Sidewalks, Site Improvements	—	
Yard Light	—	
Other and detached: garages, storage and cabanas	—	
Sub Total Cost	$ —	$
Sub Total Construction Cost Estimate for non FEMA 50% Rule Purposes	$	

Part III: Total Construction Cost (Note: The construction cost will be validated by Plan Examiners)	
Estimated Construction Cost	
Sub Total Construction Cost Estimate for FEMA 50% Rule Purposes-Part I	$ 200,000
Sub Total Construction Cost Estimate for Non FEMA 50% Rule Purposes- Part II	$ —
Total Construction Cost Estimate. (Add Part I and Part II of Construction Cost)	$ $200,000

Part IV: Signature Required

If the improvements cost will increase at any point during the proposed construction, It is Owner and the Contractor of Record responsibility to submit the revised improvements cost to the Building Department for review and approval.

Signature of Owner

STATE OF FLORIDA
COUNTY OF Miami-Dade

Sworn to and Subscribed before me this 15th day of August 2011, by:

Mauricio Delgado

[X] Personally known [ ] Produced Identification - Type of

Identification

Jennifer Montero.
Signature of Notary Public

NOTARY PUBLIC STATE OF FLORIDA
JENNIFER R. MONTERO
MY COMMISSION # DD 937095
EXPIRES: November 1, 2013
Bonded Thru Budget Notary Services

MIAMIBEACH
BUILDING DEPARTMENT
1700 Convention Center Drive, 2nd Floor
Miami Beach, Fl, 33139
Phone: (305) 673-7610 Fax: (305) 673-7857

Signature of Qualifier / Contractor

STATE OF FLORIDA
COUNTY OF Miam-Dade

Sworn to and Subscribed before me this 11th day of August 2011, by: Raul de la Sierra

[X] Personally known [ ] Produced Identification - Type of Identification

NOTARY PUBLIC STATE OF FLORIDA
JENNIFER R. MONTERO
MY COMMISSION # DD 937095
EXPIRES: November 1, 2013
Bonded Thru Budget Notary Services

Jennifer Montero.
Signature of Notary Public

Part V: Building Department Use Only

A	**Sub Total Construction Cost Estimate for FEMA 50% Rule Purposes.**	$ 200,000
B	**Over Five Year Improvements**	$ 333,384.23
C	**Total Improvements**	$ 533,384.23
D	**Building Tax Assessed Value**	$ 998,722
E	**Building Appraised Market Value**	$
F	**Improvements Cost Ratio (C/E or C/D)**	% 53.4

If improvements cost exceed 40% of the Building Tax Value, a building appraised market Value is required for evaluation of Improvement Cost Ratio.

Check one box:

☑ **New Construction and Substantial Improvement** ☐ **Existing Building and Non Substantial Improvement**

Carlos Fernandez
Engineering Inspector Name

08/17/11
Engineering Inspector Signature and Date

Note: Over $1,000,000.00 Improvements Cost requires Chief Governmental Compliance Division Approval, over $50,000,000.00 Improvements Cost requires Building Director Approval.

Name

Signature and Date

U.S. DEPARTMENT OF HOMELAND SECURITY
Federal Emergency Management Agency
National Flood Insurance Program

ELEVATION CERTIFICATE

OMB No. 1660-0008
Expires March 31, 2012

Important: Read the instructions on pages 1-9.

SECTION A - PROPERTY INFORMATION

For Insurance Company Use:
Policy Number
Company NAIC Number

A1. Building Owner's Name

A2. Building Street Address (including Apt., Unit, Suite, and/or Bldg. No.) or P.O. Route and Box No.
1801 ALTON ROAD
City MIAMI BEACH State FL ZIP Code 33139

A3. Property Description (Lot and Block Numbers, Tax Parcel Number, Legal Description, etc.)
Portion of Block 11 of Island View Subdivision, PB 6, PG 115, Miami-Dade County OR 14848 PG 0576 (Folio#02-3233-012-0090)

A4. Building Use (e.g., Residential, Non-Residential, Addition, Accessory, etc.) NON-RESIDENTIAL

A5. Latitude/Longitude: Lat. 25.794032 Long. -80.141268 Horizontal Datum: ☐ NAD 1927 ☒ NAD 1983

A6. Attach at least 2 photographs of the building if the Certificate is being used to obtain flood insurance.

A7. Building Diagram Number 1A

A8. For a building with a crawlspace or enclosure(s):
a) Square footage of crawlspace or enclosure(s) N/A sq ft
b) No. of permanent flood openings in the crawlspace or enclosure(s) within 1.0 foot above adjacent grade N/A
c) Total net area of flood openings in A8.b N/A sq in
d) Engineered flood openings? ☐ Yes ☐ No

A9. For a building with an attached garage:
a) Square footage of attached garage N/A sq ft
b) No. of permanent flood openings in the attached garage within 1.0 foot above adjacent grade N/A
c) Total net area of flood openings in A9.b N/A sq in
d) Engineered flood openings? ☐ Yes ☐ No

SECTION B - FLOOD INSURANCE RATE MAP (FIRM) INFORMATION

B1. NFIP Community Name & Community Number	B2. County Name	B3. State
CITY OF MIAMI BEACH 120651	DADE	FLORIDA

B4. Map/Panel Number	B5. Suffix	B6. FIRM Index Date	B7. FIRM Panel Effective/Revised Date	B8. Flood Zone(s)	B9. Base Flood Elevation(s) (Zone AO, use base flood depth)
12025C0184	J	01/20/1993	03/02/1994	AE	EL8

B10. Indicate the source of the Base Flood Elevation (BFE) data or base flood depth entered in Item B9.
☐ FIS Profile ☒ FIRM ☐ Community Determined ☐ Other (Describe) ____

B11. Indicate elevation datum used for BFE in Item B9: ☒ NGVD 1929 ☐ NAVD 1988 ☐ Other (Describe) ____

B12. Is the building located in a Coastal Barrier Resources System (CBRS) area or Otherwise Protected Area (OPA)? ☐ Yes ☒ No
Designation Date ____ ☐ CBRS ☐ OPA

SECTION C - BUILDING ELEVATION INFORMATION (SURVEY REQUIRED)

C1. Building elevations are based on: ☐ Construction Drawings* ☐ Building Under Construction* ☒ Finished Construction
*A new Elevation Certificate will be required when construction of the building is complete.

C2. Elevations – Zones A1-A30, AE, AH, A (with BFE), VE, V1-V30, V (with BFE), AR, AR/A, AR/AE, AR/A1-A30, AR/AH, AR/AO. Complete Items C2.a-h below according to the building diagram specified in Item A7. Use the same datum as the BFE.
Benchmark Utilized A-36 Vertical Datum 7.33
Conversion/Comments N/A

			Check the measurement used.	
a)	Top of bottom floor (including basement, crawlspace, or enclosure floor)	10.04	☒ feet	☐ meters (Puerto Rico only)
b)	Top of the next higher floor	19.80	☒ feet	☐ meters (Puerto Rico only)
c)	Bottom of the lowest horizontal structural member (V Zones only)	N/A	☐ feet	☐ meters (Puerto Rico only)
d)	Attached garage (top of slab)	N/A	☐ feet	☐ meters (Puerto Rico only)
e)	Lowest elevation of machinery or equipment servicing the building (Describe type of equipment and location in Comments)	N/A	☐ feet	☐ meters (Puerto Rico only)
f)	Lowest adjacent (finished) grade next to building (LAG)	9.73	☒ feet	☐ meters (Puerto Rico only)
g)	Highest adjacent (finished) grade next to building (HAG)	10.03	☒ feet	☐ meters (Puerto Rico only)
h)	Lowest adjacent grade at lowest elevation of deck or stairs, including structural support	9.47	☒ feet	☐ meters (Puerto Rico only)

SECTION D - SURVEYOR, ENGINEER, OR ARCHITECT CERTIFICATION

This certification is to be signed and sealed by a land surveyor, engineer, or architect authorized by law to certify elevation information. *I certify that the information on this Certificate represents my best efforts to interpret the data available. I understand that any false statement may be punishable by fine or imprisonment under 18 U.S. Code, Section 1001.*

☐ Check here if comments are provided on back of form. Were latitude and longitude in Section A provided by a licensed land surveyor? ☒ Yes ☐ No

Certifier's Name LOU BOUDREAU License Number PLS 2451

Title PROFESSIONAL LAND SURVEYOR Company Name BOCK & CLARK CORPORATION LB 7386

Address 8111 BLAIKIE COURT, SUITE B City SARASOTA State FL ZIP Code 34240

Signature Date 08/10/2009 Telephone 1-800-787-8397

LOU BOUDREAU
PLS #2451
LOUIS BOUDREAU
CERTIFICATE No. 2451
08/10/2009
STATE OF FLORIDA
REGISTERED LAND SURVEYOR

IMPORTANT: In these spaces, copy the corresponding information from Section A.	For Insurance Company Use:
Building Street Address (including Apt., Unit, Suite, and/or Bldg. No.) or P.O. Route and Box No. 1801 ALTON ROAD	Policy Number
City MIAMI BEACH State FL ZIP Code 33139	Company NAIC Number

SECTION D - SURVEYOR, ENGINEER, OR ARCHITECT CERTIFICATION (CONTINUED)

Copy both sides of this Elevation Certificate for (1) community official, (2) insurance agent/company, and (3) building owner.

Comments C 2 - Benchmark Report retrieval dated 8/9/2009 from Miami Dade County Published Benchmarks; C-2 - (e) air conditioning unit not observed at ground level, assumed to be on rooftop.

Signature Date 08/10/2009

☐ Check here if attachments

SECTION E - BUILDING ELEVATION INFORMATION (SURVEY NOT REQUIRED) FOR ZONE AO AND ZONE A (WITHOUT BFE)

For Zones AO and A (without BFE), complete Items E1-E5. If the Certificate is intended to support a LOMA or LOMR-F request, complete Sections A, B, and C. For Items E1-E4, use natural grade, if available. Check the measurement used. In Puerto Rico only, enter meters.

E1. Provide elevation information for the following and check the appropriate boxes to show whether the elevation is above or below the highest adjacent grade (HAG) and the lowest adjacent grade (LAG).
a) Top of bottom floor (including basement, crawlspace, or enclosure) is ____.____ ☐ feet ☐ meters ☐ above or ☐ below the HAG.
b) Top of bottom floor (including basement, crawlspace, or enclosure) is ____.____ ☐ feet ☐ meters ☐ above or ☐ below the LAG.

E2. For Building Diagrams 6-9 with permanent flood openings provided in Section A Items 8 and/or 9 (see pages 8-9 of instructions), the next higher floor (elevation C2.b in the diagrams) of the building is ____.____ ☐ feet ☐ meters ☐ above or ☐ below the HAG.

E3. Attached garage (top of slab) is ____.____ ☐ feet ☐ meters ☐ above or ☐ below the HAG.

E4. Top of platform of machinery and/or equipment servicing the building is ____.____ ☐ feet ☐ meters ☐ above or ☐ below the HAG.

E5. Zone AO only: If no flood depth number is available, is the top of the bottom floor elevated in accordance with the community's floodplain management ordinance? ☐ Yes ☐ No ☐ Unknown. The local official must certify this information in Section G.

SECTION F - PROPERTY OWNER (OR OWNER'S REPRESENTATIVE) CERTIFICATION

The property owner or owner's authorized representative who completes Sections A, B, and E for Zone A (without a FEMA-issued or community-issued BFE) or Zone AO must sign here. *The statements in Sections A, B, and E are correct to the best of my knowledge.*

Property Owner's or Owner's Authorized Representative's Name

Address City State ZIP Code

Signature Date Telephone

Comments

☐ Check here if attachments

SECTION G - COMMUNITY INFORMATION (OPTIONAL)

The local official who is authorized by law or ordinance to administer the community's floodplain management ordinance can complete Sections A, B, C (or E), and G of this Elevation Certificate. Complete the applicable item(s) and sign below. Check the measurement used in Items G8 and G9.

G1. ☐ The information in Section C was taken from other documentation that has been signed and sealed by a licensed surveyor, engineer, or architect who is authorized by law to certify elevation information. (Indicate the source and date of the elevation data in the Comments area below.)

G2. ☐ A community official completed Section E for a building located in Zone A (without a FEMA-issued or community-issued BFE) or Zone AO.

G3. ☐ The following information (Items G4-G9) is provided for community floodplain management purposes.

G4. Permit Number	G5. Date Permit Issued	G6. Date Certificate Of Compliance/Occupancy Issued

G7 This permit has been issued for: ☐ New Construction ☐ Substantial Improvement

G8. Elevation of as-built lowest floor (including basement) of the building: ____.____ ☐ feet ☐ meters (PR) Datum ____

G9. BFE or (in Zone AO) depth of flooding at the building site: ____.____ ☐ feet ☐ meters (PR) Datum ____

G10. Community's design flood elevation ____.____ ☐ feet ☐ meters (PR) Datum ____

Local Official's Name Title LOU BOUDREAU PLS #2451

Community Name Telephone

Signature Date

Comments

LOU BOUDREAU
08/10/2009
No. 2451
STATE OF
REGISTERED LAND SURVEYOR

☐ Check here if attachments

Building Photographs

See Instructions for Item A6.

	For Insurance Company Use:
Building Street Address (including Apt., Unit, Suite, and/or Bldg. No.) or P.O. Route and Box No. 1801 ALTON ROAD	Policy Number
City MIAMI BEACH State FL ZIP Code 33139	Company NAIC Number

If using the Elevation Certificate to obtain NFIP flood insurance, affix at least two building photographs below according to the instructions for Item A6. Identify all photographs with: date taken; "Front View" and "Rear View"; and, if required, "Right Side View" and "Left Side View." If submitting more photographs than will fit on this page, use the Continuation Page on the reverse.

DATE TAKEN: 08/10/2009
FRONT VIEW

Building Photographs

Continuation Page

	For Insurance Company Use:
Building Street Address (including Apt., Unit, Suite, and/or Bldg. No.) or P.O. Route and Box No. 1801 ALTON ROAD	Policy Number
City MIAMI BEACH State FL ZIP Code 33139	Company NAIC Number

If submitting more photographs than will fit on the preceding page, affix the additional photographs below. Identify all photographs with: date taken; "Front View" and "Rear View"; and, if required, "Right Side View" and "Left Side View."

DATE TAKEN 08/10/2009
REAR VIEW

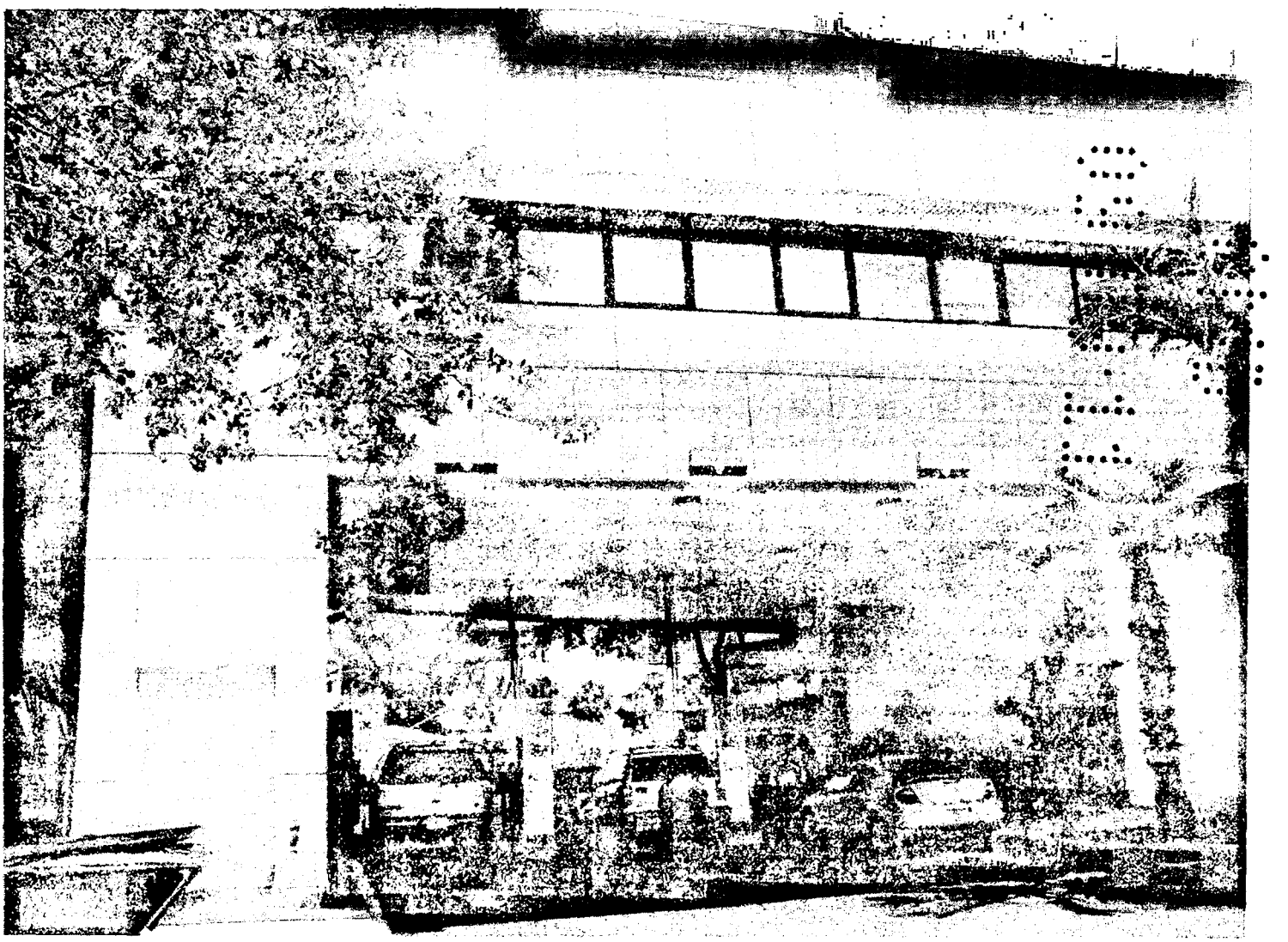

DATE TAKEN: 08/10/2009
SIDE VIEW

DATE TAKEN: 08/10/2009
SIDE VIEW

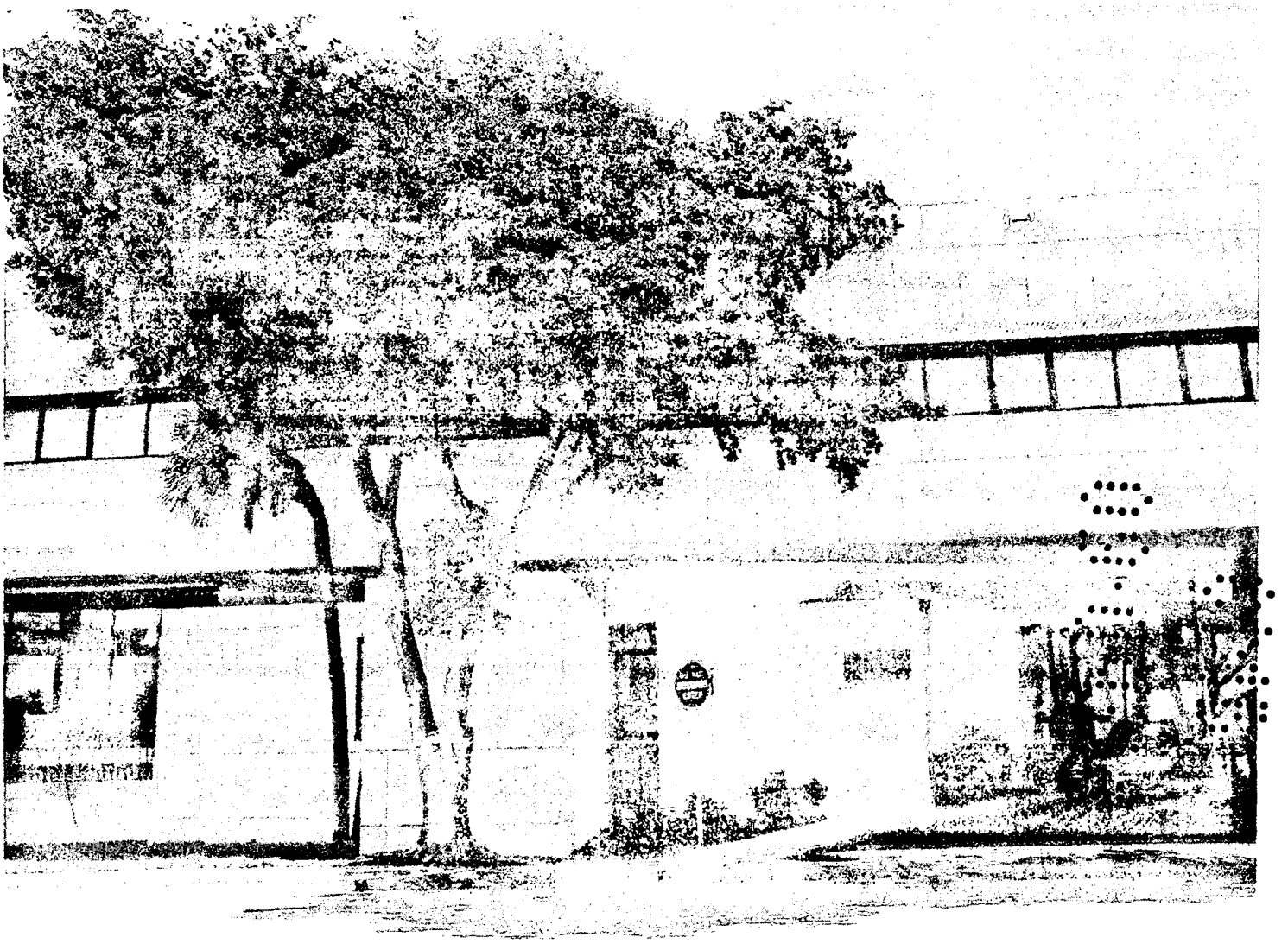

Department of Environmental Resources Management
Miami-Dade County
Plan Review Summary

Process Number: M2011007516

FINAL CORE REVIEW DATE: 7/14/2011 **OVERALL STATUS: Overall Approval**

PROJECT DETAILS:

FOLIO: 02-3234-017-0150

ADDRESS: 1201 LINCOLN RD, , FL

PERMIT TYPE DESC.: INTERIOR BUILD OUT

CONTACT DETAILS:

NAME: DEBRA MENDEZ

EMAIL:

PHONE #: 9545797929

DISAPPROVAL CODES:

TASK	REVIEWED BY	STATUS DATE	STATUS
Initial Core Review	Miriam Negrin	07/13/2011	Reviewed
ASBES Review	Anthony Hung	07/14/2011	Approved
Comments: Jul 14,2011: Asbestos affidavit submitted. A-0.3 Demolition interior partitions and floor finishes > 160 sf surface area.			
Final Core Review	Miriam Negrin	07/14/2011	Overall Approval
Comments: ~~city of~~ miami pc#bd110187 no change of use from shoe store to sprint retail store.			

PLAN CONDITIONS:

NO CONDITIONS

Allocation Letter is not required, as per Miriam Negrin

8/22/11

PLAN REVIEW FEES (FEES ARE SUBJECT TO CHANGE PENDING FINAL APPROVAL):

FEE CODE	DESCRIPTION	USER	DATE	UNIT	TOTAL
D015	Asbestos Review	MIRIAM	07/14/2011	1	$175.00
D034	FastTrack Fee	ADMIN	07/01/2011	1	$80.00
D034R	FastTrack Fee	ADMIN	07/01/2011	1	($80.00)
D062	Commercial & Multifam Min Review	MIRIAM	07/14/2011	1	$90.00
Total					**$265.00**

FOR MORE INFORMATION PLEASE CONTACT:

YOUR DERM CORE REVIEWER: hadadm@miamidade.gov

DERM PERMITTING AND INPECTION CENTER, 11805 SW 26 ST, 786-315-2800

DERM OVERTOWN TRANSIT CENTER, 701 NW 1 CT, 305-372-6899

Coastal: dermcr@miamidade.gov

EEOS - Environmental
Enterprise Operations System

Menu | Favorites | Help | Logout | PlanReview

User ID: SHAHIN

Admin Tools | Daily | ACCELA AUTOMATION®

SmartManager | Application | Property | People | Fees | Cashier | Workflow | Attachments | Reports | Preference | Condition

Workflow

Application Name: M2011007516
Application Type: PlanReview / WD-Unincorporated Plan Review / Commercial / Addition
Application: 2011-WDU-PR-08064

- Quality Control
- ✔ Plan Intake
- Hold Codes
- FLOOD Review
- ✔ Initial Core Review
- AIR Review
- COAST Review
- GREASE Review
- INDUST Review
- P D Review
- POLREM Review
- PRETRT Review
- TANKS Review
- TREES Review
- WETLAND Review
- AIRPORT Review
- WATER TREATMENT Review
- PRED Review
- ✔ ASBES Review
- ✔ Final Core Review

Task Details - Initial Core Review

Assigned Date: 06/30/2011
Assigned To:
Current Status: Reviewed
Action By: Miriam Negrin
Status Comment:

Due Date: 06/30/
Department: MDPIC
Status Date: 07/13/
Department: MDPIC

☑ **Display Comment in ACA**

Comment Display in ACA

- All ACA Users
- CAP Creator
- Licensed Professional
- Contact
- Owner

Task Specific Information - Initial Core Review

GENERAL

Proposed Improvement Type * Alteration Interior
Proposed Sq. Ft. * 0 (Number)
Current Use * retail
ERP# *

End of Process

	n/a	(Text)
ERP Condition (4000 char max)		

FLOOD

Flood Zone *	NA	
Base Flood Elevation *	Unknown	
County Flood Criteria *	0	(Number)
Unit Type *	NA	
Unit Description		(Text)

ASBESTOS

Total Demolition		
Number of Adjacent Demolition Projects		(Number)
Asbestos Affidavit for SFH Submitted		

ALLOCATION

Allocation *	NA	
Allocation # *	n/a	(Text)

As per Miriam Negrin; Allocation Letter is not required! 8/22/11

WATER SUPPLY

Potable Water *	Public	
PWO #		(Text)
Location of Water Main *	abutting	(Text)
Feasible Distance (Water) *	n/a	(Text)
Water Utility Name *	mb	(Text)
Water Extension # *	n/a	(Text)

WASTEWATER

Wastewater Disposal * Gravity Sewer

DWO # (Text)

Sewage Loading (4000 char max)

Location Of Sewer Main * abutting (Text)

Feasible Sewer (Distance) * n/a (Text)

Sewer Utility Name * wasd (Text)

Sewer Extension # * n/a (Text)

Holding Tank Permit # (Text)

Septic Tank Covenant Filed Under * n/a (Text)

MDR Approval * ○ Yes ◉ No

MDR # (Text)

AAST Approval * ○ Yes ◉ No

AAST # (Text)

COI

COI * ○ Yes ◉ No

COI Identifier * None

COI Zone * NA

COI Covenant Filed Under * n/a (Text)

OTHER

Contaminated Site * ○ Yes ◉ No

EQCB * ○ Yes ◉ No

NFC * ○ Yes ◉ No

EEL * ○ Yes ◉ No

Pinelands * ○ Yes ◉ No

Wetlands * ○ Yes ◉ No

Superfund Site * ○ Yes ◉ No

Dump Site * ○ Yes ◉ No

Solid Waste Site * ○ Yes ◉ No

Hydric Soil * ○ Yes ◉ No

Soil Type * N/A

Annual Operating Permit(s) (Text)

DISAPPROVAL CODES

Disapproval Code 01

Release Disapproval Code 01 ○ Yes ◉ No

Disapproval Code 02

Release Disapproval Code 02 ○ Yes ◉ No

Disapproval Code 03

Release Disapproval Code 03 ○ Yes ◉ No

Disapproval Code 04

Release Disapproval Code 04 ○ Yes ◉ No

Disapproval Code 05

Release Disapproval Code 05 ○ Yes ◉ No

11.60.60

9:40

SECOND LOOK
RECYCLED WALLCOVERING

March 4, 2009

D.L. Couch Wallcovering
3900 S. Memorial Drive
New Castle, IN 47362

To Whom It May Concern:

This will certify that LSI custom strike off patterns #31268 & #31950, produced with *Second- Look* construction, are Class A Fire Rated and meet or exceed all Type II requirements of CCC-W-408A/D, and Industry Voluntary Standard CFFA-W-101A/D.

Performance Specifications

Total Weight	20 oz./ly (452 gr/M2)
Width	52/54" (132/137 cm)
Fabric	Osnaburg
Breaking Strength (Avg.)	115 x 100
Tear Strength (Avg.)	55 x 75

Fire Hazard Classification (ASTM E-84)

Flame spread	10
Smoke Density Factor	40

Second-Look®

- Contains 20% recycled content by weight
- Minimum 10% post-consumer

LSI Wallcovering

Vicki Schweitzer

Vicki Schweitzer
Customer Service Manager

daltile

NATURAL STONE COLLECTION

Emperador Dark (Polished) M725

Marble

Tile

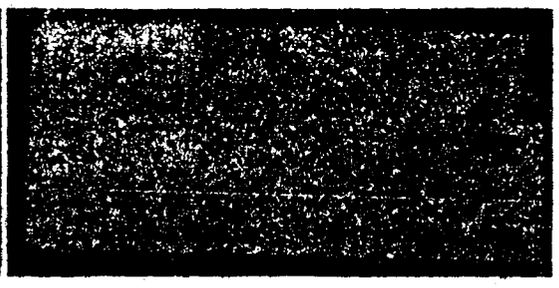

Country of Origin	Spain	Indicates country in which stone was originally quarried. Further processing and cutting may have taken place in countries other than those listed.
Durability	2	Medium/Light Commercial - Suitable for light commercial and residential use.
Soundness	Group C	These stones may contain holes, voids, lines or separation and structural flaws. It is standard practice to repair these stones by filling them or reinforcing them.
Shade Variation	M	Medium: Background color contains slight variations.
Exterior Usage	EW Suitable for covered exterior walls in freezing and non-freezing climates.	
Commercial Exterior Usage	EW Suitable for covered exterior walls in freezing and non-freezing climates.	
Stock Tile Sizes and Finishes	16" x 16" x 5/8" Polished 12" x 12" x 3/8" Polished	
Stock Slab Sizes and Finishes	1 1/4" (3 cm) Polished 3/4"	
Special Order Sizes Available	Yes	Consult your Daltile Architectural Representative for more information on special sizes.
Cut-To-Size Available	N/A	
Alternate Finishes Available by Special Order	Tumbled Honed	Some finishes may require extended lead times.

Special Notes

- Not recommended in wet areas.
- Might contain dry seams, pits, fossils, and glass veins that are filled at the factory or during installation. These are all inherent characteristics of the stone. Since these voids can sometimes lose their fillings, they should be refilled as part of normal maintenance.
- A sealer is recommended. (Note: Some limestone and tumbled stone should be sealed prior to grouting.)

Consult your Daltile Architectural Representative for more information on special sizes. Some finishes may require extended lead times.

Technical Information	ASTM Test Method	Value *
Absorption by Weight, %	C97	0.197
Density, lbs/ft	C97	163.8
Compressive Strength, psi	C170	12,708.0
Abrasion Resistance, hardness	C241	38.04
Flexural Strength, psi	C880	834.0
Weather Resistance	C217	N/A
Modulus of Rupture, psi	C120	N/A

* Technical values supplied by the Marble Institute of America (MIA) and American Society for Testing and Materials (ASTM); and provide a frame of reference only. Actual performance may vary.

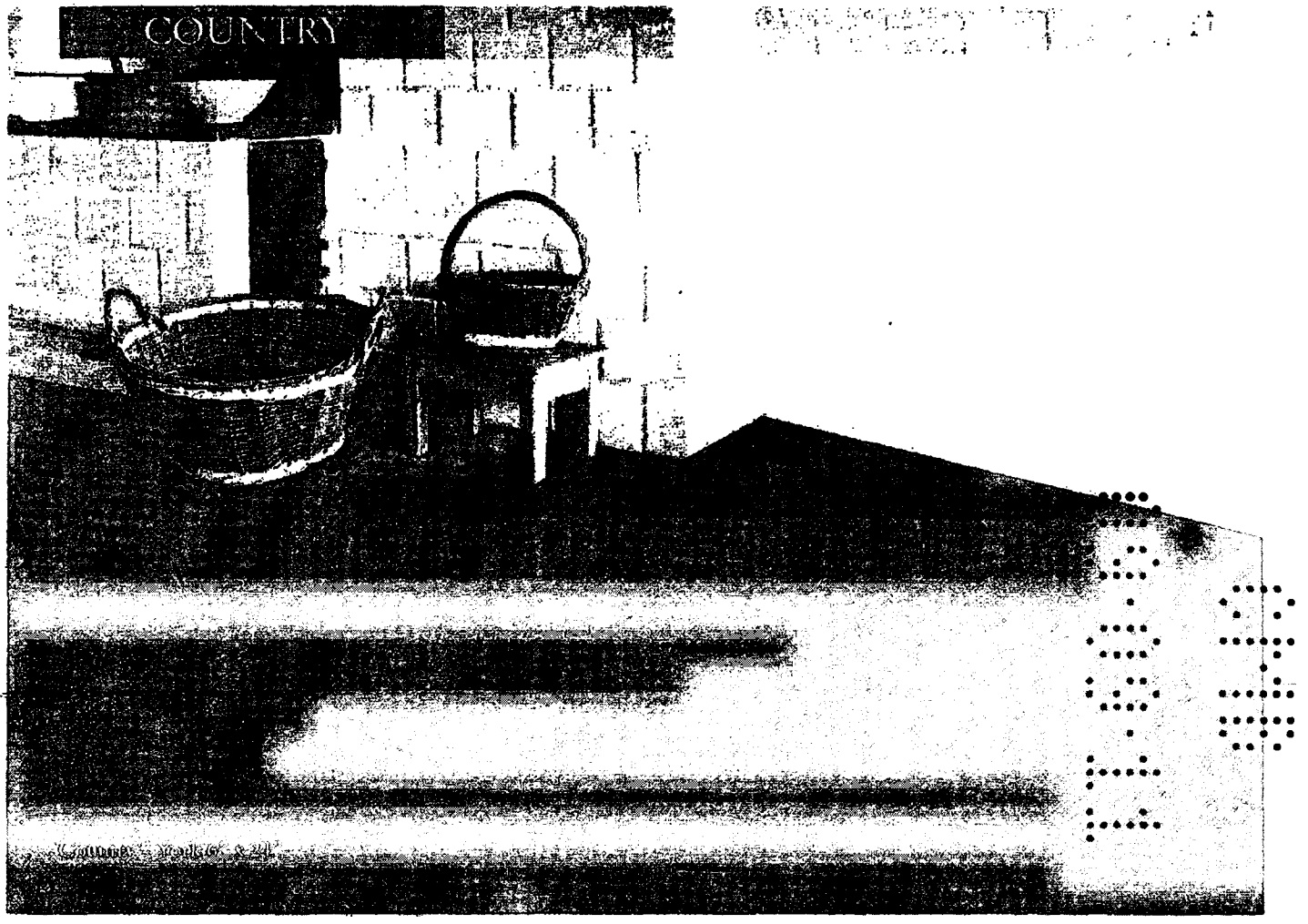

AVAILABLE SIZES

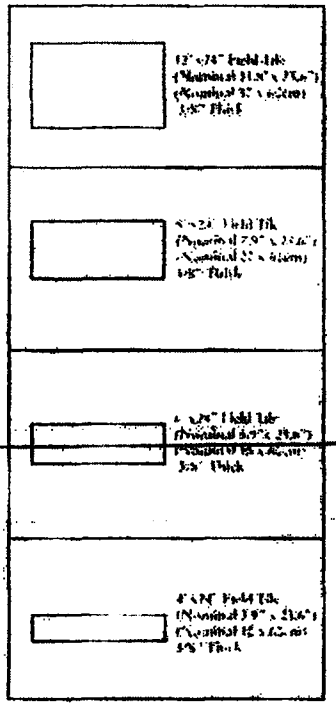

SUGGESTED PATTERNS

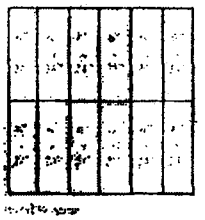

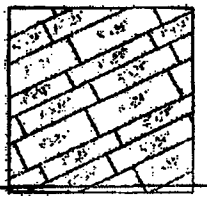

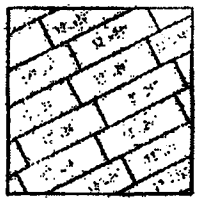

COLOR SHADE VARIATION

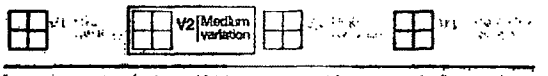

Variations in color, shade and texture are inherent in ceramic tile. Several pieces should be examined collectively prior to installation.

Grout Joint Recommendations: Approximately 3/16"

APPLICATION

Appropriate for interior and exterior floors and walls in freezing and non-freezing temperatures. Porcelain tile floors, like other types of glazed floors, can become slippery when wet. Take precautions when selecting a floor product that will be exposed to conditions such as liquids, grease, or oil. Always follow proper installation methods.

TECHNICAL SPECIFICATIONS

TEST NAME	ASTM TEST	TEST RESULTS
Abrasion Resistance	ASTM C-1027	III
Breaking Strength	ASTM C-648	438 lbs
Chemical Resistance	ASTM C-650	Resistant
Coefficient of Friction	ASTM C-1028	Dry Neolite ≥0.60 Wet Neolite ≥0.60
Frost Resistance	ASTM C-1026	Resistant
Scratch Hardness	MOHS SCALE	7
Water Absorption	ASTM C-373	≤.5%

Care and Maintenance and Limited Warranty

General Care and Maintenance of Porcelain and Ceramic Tiles

- Sweep or vacuum your floors regularly
- Tend to spills quickly, floors may be slippery when wet, spills may discolor grout
- Wash tiles with clean water – if using soap or mild detergent make sure it is pH balanced
- Never use any cleaners that contain acid. Acidic or bleach based products may strip pigment from grout and will cause sanded grouts to deteriorate.

General Care and Maintenance of Natural Stone floor and wall

All finishes of natural stone whether honed, polished, or tumbled, look beautiful and are very durable when protected and maintained properly. Natural stone products are inherently porous and therefore require a different maintenance than ceramic or porcelain tile. By following some simple guidelines, the life of the floor and/or wall can be extended.

- Sweep or vacuum your floors regularly, dirt and dust can scratch the surface
- Wash with clean water – if you use a soap make sure it is pH balanced
- It is recommended to only use cleansers specifically designed for cleaning natural stone.
- Never use any cleaners that contain ACID – when in doubt don't
- Never use bleach, vinegar, or lemon juice as these can etch and eventually damage the stones surface
- Tend to spills quickly – Sealers do not prevent 100% of damage due to spills
- Never apply wax or acrylics – this will damage the stone

General Care and Maintenance of Natural Stone Countertops

Natural stone is an excellent choice for kitchen, bathroom, and bar countertops. By following some simple guidelines, the life of the countertop can be extended.

- Never cut directly on the surface of the countertop
- Use coasters, tablecloths or placemats to avoid stains
- Clean up liquid spills quickly especially from acids like orange or lemon juice and oils like olive oil or other condiments which can harm your stone
- Do not place any hot cookware directly on top of the stone- Use a trivet or a hot pad between the counter and very hot cookware
- As with floor care do not use heavy abrasive cleansers or cleaning pads, use a soft sponge or cloth

Sealing Natural Stone

Sealing is essential to protect the beauty and ensure the longevity of any natural stone product. A penetrating sealer is highly recommended for polished or honed marble, limestone, sandstone, tumbled stone, onyx and granite. A stone enhancer sealer may be used to enhance the color of the stone to its fullest potential. As part of routine maintenance procedure, all Emser Tile products require resealing on a regular basis.

Corporate Headquarters 8431 Santa Monica Blvd. Los Angeles, CA 90069-4209
Phone 323-650-2000 Fax 323-654-3190 Email:info@emser.com
www.emser.com

General Warning

Emser Tile does not manufacture installation products or natural stone cleaning / maintenance products. Please contact chemical and/or grout manufacturers directly prior to usage to obtain proper handling and application instructions. Emser Tile also strongly advises testing a small area prior to the full application of any chemical product to verify that unexpected discoloration does not occur.

Application of a sealer to the natural stone surface should never be done as an attempt to add a shine to a honed, scratched, or non-polished stone product. This will possibly create either maintenance or slip resistance problems. Consult the manufacturer of any surface altering product for more detailed information about the impact of its specific product on safety, or appearance.

Emser Tile® 1- Year Limited Warranty and Limitations on Liability

Emser offers a warranty on its products to the original purchaser, for one year from the date of purchase, to be free of manufacturing defects.

Emser warrants only to its immediate customers and to no other person that its products will, on the date of ship, meet the foregoing terms of Emser's Bid Confirmation, Order Acknowledgement, or Sales Order pursuant to which such products were sold.

Tile and natural stone are subject to standard variances resulting from the manufacturing process or origin. Emser does not provide warranty on products that are within the industry standard variance levels.

Defects and Claims.

In the event of a defect within any product distributed to Customer by Emser, Customer agrees to notify Emser immediately upon becoming aware of such defect. If a defect in manufacturing or coloring is identified in advance of installation, Customer agrees to not install any defective product without the written agreement of Emser.

Emser reserves the right to inspect any and all defects prior to any repair, remediation or settlement of such defect. In the event that Emser is requested to participate in the repair, remediation or settlement of any defect, Emser must be included in all discussions and decisions related to such repair, remediation and/or settlement. In the event that Customer fails to notify Emser on a timely basis, or fails to allow Emser the right of inspection, discussion or decision making in advance of repair, remediation or settlement of any defect, Customer agrees to release Emser from any liability for the defect or claim.

Customer misuse including negligence, physical or chemical abuse is not covered by this warranty. Improper installation, installation defects or errors are not covered by this warranty. Warranty claims must be submitted in writing 30 days upon discovery of the proposed defect.

Corporate Headquarters 8431 Santa Monica Blvd. Los Angeles, CA 90069-4209
Phone 323-650-2000 Fax 323-654-3190 Email:info@emser.com
www.emser.com

Emser Tile® 1- Year Limited Warranty and Limitations on Liability

Limited Warranty - Emser offers a warranty on its products to the original purchaser, for one year from the date of purchase, to be free of manufacturing defects.

Emser warrants only to its immediate customers and to no other person that its products will, on the date of ship, meet the foregoing terms of Emser's Bid Confirmation, Order Acknowledgement, or Sales Order pursuant to which such products were sold.

Tile and natural stone are subject to standard variances resulting from the manufacturing process or origin. Emser does not provide warranty on products that are within the industry standard variance levels.

1. **Defects and Claims**. In the event of a defect within any product distributed to Customer by Emser, Customer agrees to notify Emser immediately upon becoming aware of such defect. If a defect in manufacturing or coloring is identified in advance of installation, Customer agrees to not install any defective product without the written agreement of Emser.

   Emser reserves the right to inspect any and all defects prior to any repair, remediation or settlement of such defect. In the event that Emser is requested to participate in the repair, remediation or settlement of any defect, Emser must be included in all discussions and decisions related to such repair, remediation and/or settlement. In the event that Customer fails to notify Emser on a timely basis, or fails to allow Emser the right of inspection, discussion or decision making in advance of repair, remediation or settlement of any defect, Customer agrees to release Emser from any liability for the defect or claim.

   Customer misuse including negligence, physical or chemical abuse is not covered by this warranty. Improper installation, installation defects or errors are not covered by this warranty. Warranty claims must be submitted in writing 30 days upon discovery of the proposed defect.

8431 Santa Monica Boulevard Los Angeles, CA 90069
Tel: 323-650-2000 www.emser.com

Florida Energy Efficiency Code For Building Construction

Florida Department of Community Affairs

EnergyGauge Summit® Fla/Com-2008, Effective: March 1, 2009 -- Form 400B-2008

Method B: Prescriptive Compliance for Renovations, Occupancy Change, etc.

PROJECT SUMMARY

Short Desc:	Chase CPC Alton Rd	**Description:**	Chase CPC Alton Rd
Owner:	Chase		
Address1:	1801 Alton Rd	**City:**	Miami Beach
Address2:		**State:**	FL
		Zip:	33139
Type:	Retail	**Class:**	Renovation to existing buildi
Jurisdiction:	MIAMI BEACH, MIAMI-DADE COUNTY, FL (232500)		
Conditioned Area:	846 SF	**Conditioned & UnConditioned Area:**	846 SF
No of Stories:	1	**Area entered from Plans**	0 SF
Permit No:	0	**Max Tonnage**	0
		If different, write in:	

TIMOTHY L. FAFERDING
PROFESSIONAL ENGINEER
JUN 03 2011

Compliance Summary

Component	Design	Criteria	Result
RENOVATED ENVELOPE PRESCRIPTIVE			**PASSES**
LIGHTING POWER	1,169.0	1,206.5	**PASSES**
LIGHTING CONTROLS			**PASSES**
EXTERNAL LIGHTING			**None Entered**
HVAC SYSTEM			**None Entered**
PLANT			**None Entered**
WATER HEATING SYSTEMS			**None Entered**
PIPING SYSTEMS			**PASSES**
Met all required compliance from Check List?			**Yes/No/NA**

IMPORTANT MESSAGE
Info 5009 -- -- -- An input report of this design building must be submitted along with this Compliance Report

CERTIFICATIONS

TIMOTHY L. RABERDING CERTIFICATE NO. 62078 STATE OF FLORIDA PROFESSIONAL ENGINEER

I hereby certify that the plans and specifications covered by this calculation are in compliance with the Florida Energy Code

Prepared By: Design Forum — Building Official: _____

Date: JUN 03 2011 — Date: _____

I certify that this building is in compliance with the FLorida Energy Efficiency Code

Owner Agent: _____ — Date: _____

If Required by Florida law, I hereby certify (*) that the system design is in compliance with the FLorida Energy Efficiency Code

Architect:	Don Rethman	Reg No:	Architect - 17505
Electrical Designer:	Tim Raberding	Reg No:	Engineer - 62078
Lighting Designer:	Tim Raberding	Reg No:	Engineer - 62078
Mechanical Designer:	Tim Raberding	Reg No:	Engineer - 62078
Plumbing Designer:	Tim Raberding	Reg No:	Engineer - 62078

(*) Signature is required where Florida Law requires design to be performed by registered design professionals.

Project: Chase CPC Alton Rd
Title: Chase CPC Alton Rd
Type: Retail
(WEA File: FL_MIAMI_INTL_AP.tm3)

Prescriptive Envelope Compliance

Item	Zone	Description	Design	Criteria	Meet Req.
Glass	Second Floor	Percent glass Max allowed	.000	50.000	Yes
Skylights	Second Floor	Percent Skylight Max allowed	.000	5.000	Yes

Meets Shell Envelope Requirements -- PASSES

External Lighting Compliance

Description	Category	Tradable?	Allowance (W/Unit)	Area or Length or No. of Units (Sqft or ft)	ELPA (W)	CLP (W)

None

Project: Chase CPC Alton Rd
Title: Chase CPC Alton Rd
Type: Retail
(WEA File: FL_MIAMI_INTL_AP.tm3)

Lighting Power Compliance

Space	Ashrae ID	Description	Area (sq.ft)	Height (ft)	No. of Spaces	Design (W)	Effective (W)	Allowance (W)
SSA Area	18,001	Bank/Office Banking Activity Area	353	10.0	1	442	442	529
Conference	15	Conference/meeting (Multiple Functions)	215	10.0	1	363	363	280
Banker's Ar	18,001	Bank/Office Banking Activity Area	258	10.0	1	312	312	388
Coat Closet	5	Corridor	10	10.0	1	26	26	5
Coat Closet	5	Corridor	10	10.0	1	26	26	5

Design : 1169 (W)
Effective: 1169 (W)
Allowance: 1206.52 (W)
Passing requires Design to be at most 100% of Criteria

PASSES

Project: Chase CPC Alton Rd
Title: Chase CPC Alton Rd
Type: Retail
(WEA File: FL_MIAMI_INTL_AP.tm3)

Lighting Controls Compliance

Acronym	Ashrae ID	Description	Area (sq.ft)	Design CP	Min CP	Compli-ance
SSA Area	18,001	Bank/Office Banking Activity Area	353	2	1	PASSES
Conference #1	15	Conference/meeting (Multiple Functions)	215	3	1	PASSES
Banker's Area	18,001	Bank/Office Banking Activity Area	258	2	1	PASSES
Coat Closet	5	Corridor	10	1	1	PASSES
Coat Closet	5	Corridor	10	1	1	PASSES

PASSES

System Report Compliance

No. of Units

Component	Category	Capacity	Design Eff	Eff Criteria	Design IPLV	IPLV Criteria	Comp-liance

None

Plant Compliance

Description	Installed No	Size	Design Eff	Min Eff	Design IPLV	Min IPLV	Category	Comp liance

None

Water Heater Compliance

Description	Type	Category	Design Eff	Min Eff	Design Loss	Max Loss	Compliance

None

Project: Chase CPC Alton Rd
Title: Chase CPC Alton Rd
Type: Retail
(WEA File: FL_MIAMI_INTL_AP.tm3)

Piping System Compliance

Category	Pipe Dia [inches]	Is Runout?	Operating Temp [F]	Ins Cond [Btu-in/hr .SF.F]	Ins Thick [in]	Req Ins Thick [in]	Compliance
Domestic and Service Hot Water Systems	0.50	False	105.00	0.28	0.50	0.50	PASSES
Domestic and Service Hot Water Systems	0.74	False	105.00	0.28	0.50	0.50	PASSES
Domestic and Service Hot Water Systems	1.00	False	105.00	0.28	0.50	0.50	PASSES

PASSES

Project: Chase CPC Alton Rd
Title: Chase CPC Alton Rd
Type: Retail
(WEA File: FL_MIAMI_INTL_AP.tm3)

Other Required Compliance

Category	Section	Requirement (write N/A in box if not applicable)	Check
Report	13-101	Input Report Print-Out from EnergyGauge FlaCom attached	☐
Operations Manual	13-102.1, 13-410, 13-413	Operations manual provided to owner	☐
Windows & Doors	13-406.AB.1.1	Glazed swinging entrance & revolving doors: max. 1.0 cfm/ft²; all other products: 0.4 cfm/ft²	☐
Joints/Cracks	13-406.AB.1.2	To be caulked, gasketed, weather-stripped or otherwise sealed	☐
Dropped Ceiling Cavity	13-406.AB.3	Vented: seal & insulated ceiling. Unvented seal & insulate roof & side walls	☐
System	13-407	HVAC Load sizing has been performed	☐
Reheat	13-407.B	Electric resistance reheat prohibited	☐
HVAC Efficiency	13-407, 13-408	Minimum efficiences: Cooling Tables 13-407.AB.3.2.1A-D; Heating Tables 13-407.AB.3.2.1B, 13-407.AB.3.2.1D, 13-408.AB.3.2.1E, 13-408.AB.3.2F	☐
HVAC Controls	13-407.AB.2	Zone controls prevent reheat (exceptions); simultaneous heating and cooling in each zone; combined HAC deadband of at least 5°F (exceptions)	☐
Ventilation Controls	13-409.AB.3	Motorized dampers reqd, except gravity dampers OK in: 1) exhaust systems and 2) systems with design outside air intake or exhaust capacity ≤300 cfm	☐
ADS	13-410	Duct sizing and Design have been performed	☐
HVAC Ducts	13-410.AB	Air ducts, fittings, mechanical equipment & plenum chambers shall be mechanically attached, sealed, insulated & installed per Sec. 13-410 Air Distribution Systems	☐
Balancing	13-410.AB.4	HVAC distribution system(s) tested & balanced. Report in construction documents	☐
Piping Insulation	13-411.AB	In accordance with Table 13-411.AB.2	☐
Water Heaters	13-412.AB	Performance requirements in accordance with Table 13-412.AB.3. Heat trap required	☐
Swimming Pools	13-412.AB.2.6	Cover on heated swimming pools: Time switch (exceptions); Readily accessible on/off switch	☐
Hot Water Pipe Insulation	13-411.AB.3	Table 13-411.AB.2 for circulating systems, first 8 feet of outlet pipe from storage tank and between inlet pipe and heat trap	☐
Water Fixtures	13-412.AB.2.5	Shower hot water flow restricted to 2.5 gpm at 80 psi. Public lavatory fixture how water flow 0.5 gpm max; if self-closing valve 0.25 gallon recirculating, 0.5 gallon non recirculating	☐
Motors	13-414	Motor efficiency criteria have been met	☐
Lighting Controls	13-415.AB	Automatic control required for interior lighting in buildings >5,000 s.f.; Space control; Exterior photo sensor; Tandom wiring with 1 or 3 linear fluuorescent lamps>30W	☐

Interface FLOR®

Material Safety Data Sheet

NON-Hazardous Substance, NON-Dangerous Goods

1. MATERIAL AND SUPPLY COMPANY IDENTIFICATION

Product name: NYLON TUFTED CARPET TILE ON CUSHIONBAC™ BACKING

Recommended use: Carpet floor covering.

Supplier: Interface Aust Pty Limited
ACN: 000 692 026
Street Address: 4 Henry Street
Picton, NSW 2571
Australia
Telephone: + 61 1800 008 101

Website: www.InterfaceFLOR.com.au

24/7 Emergency telephone number: +61 1800 785 277

2. HAZARDS IDENTIFICATION

Based on available information, this material is not classified as hazardous according to criteria of NOHSC Australia.

Not classified as Dangerous Goods by the criteria of the Australian Dangerous Goods Code (ADG Code) for transport by Road and Rail.

Poisons Schedule (Aust): Not applicable

3. COMPOSITION INFORMATION

CHEMICAL	ENTITY CAS NO.	PROPORTION
Nylon carpet fibre	-	25-50%
Polyvinyl chloride	-	8-25%
SBR Foam	-	15-25%
Non-hazardous ingredients	-	<8%
		100%

4. FIRST AID MEASURES

If poisoning occurs, contact a doctor or Poisons Information Centre (Phone Australia 131 126, New Zealand 03 474 7000).

Inhalation: Not applicable.

Skin contact: Not applicable.

Eye contact: Not applicable.

Ingestion: If obstruction persists seek medical advice.

Notes to physician: Treat symptomatically

Material Safety Data Sheet

5. FIRE-FIGHTING MEASURES

Specific hazards: Not readily combustible, but will support combustion of other materials.

Fire fighting further advice: Fire fighters to wear self-contained breathing apparatus and suitable protective clothing if risk of exposure to vapour or products of combustion.

Hazchem Code: Not applicable

Suitable extinguishing media: Not readily combustible, however, if material is involved in a fire use; water fog (or if unavailable fine water spray), foam, dry agent (carbon dioxide, dry chemical powder).

6. ACCIDENTAL RELEASE MEASURES

Pick up large pieces. Sweep up, but avoid generating dust.

Dangerous Goods – Initial Emergency Response Guide No: Not applicable.

7. HANDLING AND STORAGE

Handling: Not applicable

Storage: Store in a clean, dry place.

8. EXPOSURE CONTROLS / PERSONAL PROTECTION

National occupational exposure limits:
No value assigned for this specific material by the National Occupational Health and Safety Commission (NOHSC Australia).

Biological Limit Values: As per the "National Model Regulations for the Control of Workplace Hazardous Substances [NOHSC: 1005 (1994)]" the ingredients in this material do not have a Biological Limit Allocated.

Engineering measures: Natural ventilation should be adequate under normal use conditions.

Personal protection equipment: During handling and installation wear standard safety equipment - overalls and safety shoes. Always wash hands before smoking, eating, drinking or using the toilet.

9. PHYSICAL AND CHEMICAL PROPERTIES

Form / Colour / Odour: Carpet tile, various colours.

Solubility: Insoluble in water.

Specific Gravity (20 °C): N Av

Relative Vapour Density (air=1): N App

Vapour Pressure (20 °C): N App

Flash Point:	N App
Flammability Limits (%):	N App
Autoignition Temperature (°C):	N Av
Melting Point/Range (°C):	N App
Boiling Point/Range (°C):	N App
pH:	N App

(Typical values only - consult specification sheet)
N Av = Not available N App = Not applicable

10. STABILITY AND REACTIVITY

Chemical stability:	This material is thermally stable.
Conditions to avoid:	Extreme heat.
Incompatible:	No information available.
Hazardous decomposition products:	No information available.
Hazardous reactions:	No information available.

11. TOXICOLOGICAL INFORMATION

No adverse health effects expected if the product is handled in accordance with this Safety Data Sheet and the product label. Symptoms or effects that may arise if the product is mishandled and overexposure occurs are:

Acute Effects

Inhalation:	Not expected to cause respiratory irritation.
Skin contact:	Not expected to be a skin irritant.
Eye contact:	Not expected to be an eye irritant.
Ingestion:	Not a likely source of exposure. May cause physical obstruction if ingested.
Long Term Effects:	No information available for product.

Acute toxicity / Chronic toxicity
No LD50 data available for the product.

12. ECOLOGICAL INFORMATION

Avoid contaminating waterways.

Ecotoxicity: No information available.

Persistence and degradability: No information available.

Mobility: No information available.

13. DISPOSAL CONSIDERATIONS

Best practice is to recover and recycle. For disposal refer to State/Territory Land Waste Management Authority.

14. TRANSPORT INFORMATION

ROAD AND RAIL TRANSPORT
Not classified as Dangerous Goods by the criteria of the Australian Dangerous Goods Code (ADG Code) for transport by Road and Rail.

MARINE TRANSPORT
Not classified as Dangerous Goods by the criteria of the International Maritime Dangerous Goods Code (IMDG Code) for transport by sea.

AIR TRANSPORT
Not classified as Dangerous Goods by the criteria of the International Air Transport Association (IATA) Dangerous Goods Regulations for transport by air.

15. REGULATORY INFORMATION

Poisons Schedule (Aust): Not applicable

All the constituents of this material are listed on the Australian Inventory of Chemical Substances (AICS).

16. OTHER INFORMATION

Literary reference

This Material Safety Data Sheet has been prepared by Chemical Data Services Pty Ltd on behalf of its client.

For further information about this product;

Contact: Interface Aust Pty Limited, Technical Manager

Telephone: + 612 4677 8801

Email: enquiries.AP@InterfaceFLOR.com

Reason(s) For Issue: New Contact Details

Material Safety Data Sheets are updated frequently. Please ensure that you have a current copy.

Material Safety Data Sheet

This MSDS summarises at the date of issue our best knowledge of the health and safety hazard information of the product, and in particular how to safely handle and use the product in the workplace. Since Interface Australia Pty Ltd cannot anticipate or control the conditions under which the product may be used, each user must, prior to usage, review this MSDS in the context of how the user intends to handle and use the product in the workplace.

If clarification or further information is needed to ensure that an appropriate assessment can be made, the user should contact this company.

Our responsibility for product as sold is subject to our standard terms and conditions, a copy of which is sent to our customers and is also available upon request.

MATERIAL SAFETY DATA SHEET

Armstrong

Resilient Sheet Flooring Products and Resilient Tile Flooring Products

Prepared 6/09

Armstrong World Industries, Inc.
P. O. Box 3001
Lancaster, PA 17604
www.armstrong.com
MSDS: www.floorexpert.com
Technical Services:
1-877-276-7876, Option 2,3,3

I. PRODUCT IDENTIFICATION

Name: Armstrong Resilient Sheet Flooring Products and Armstrong Resilient Tile Flooring Products
Description: Vinyl Flooring

II. DEPARTMENT OF TRANSPORTATION INFORMATION

Shipping name: Not Classified. Hazard Class: N/A. ID #: N/A
EMERGENCY ONLY CONTACT: CHEM-TEL -1-800-255-3924

III. HMIS (0=minimal hazard; 4 = severe hazard)

Health = 0 Flammability = 1 Reactivity = 0

IV. PRODUCT CONTENT

This product does not contain chemicals subject to the reporting requirements of Section 313 of SARA Title III and 40 CFR 372. All components are on TSCA inventory. This product does NOT contain asbestos.

V. HAZARDOUS INGREDIENTS

(Chemical Identity; Common Name)	C.A.S. No.	%	OSHA PEL	ACGIH TLV
None	N/A	N/A	N/A	N/A

DESCRIPTION AND INGREDIENT INFORMATION

These vinyl flooring products are produced for residential and commercial (architectural) marketplace use. They come in a wide variety of aesthetic designs, styles, colors, surface finishes, and sizes.

MISCELLANEOUS INFORMATION

Each of these products is classified as an "article" according to Title 29 of the Code of Federal Regulations, OSHA Part 1910.1200(c). They are formed to a specific shape or design during manufacture, have end use functions dependent upon their shape or design, and do not release any hazardous chemical under normal conditions of use.

VI. PHYSICAL DATA

APPEARANCE: Material dependent. BOILING POINT (degrees F): N/A. VAPOR PRESSURE (mm Hg @ 20 degrees C): N/A. VAPOR DENSITY (Air = 1): N/A. PERCENT VOLATILE BY WEIGHT (30 min. @ 275 degrees F): N/A. EVAPORATION RATE (Butyl Acetate = 1): N/A. SOLUBILITY IN WATER: N/A. SPECIFIC GRAVITY (H_2O = 1): N/A. pH: N/A.

VII. FIRE AND EXPLOSION HAZARD DATA

FLASH POINT: N/A. FLAMMABLE RANGE: LEL = N/A; UEL = N/A. EXTINGUISHING MEDIA: Water. SPECIAL FIRE FIGHTING PROCEDURES: Protect fire fighters from toxic products of combustion by wearing self-contained breathing apparatus. UNUSUAL FIRE AND EXPLOSION HAZARDS: None.

VIII. HEALTH HAZARD DATA

PRIMARY ROUTE(S) OF ENTRY: N/A. TARGET ORGANS: N/A. EFFECTS OF OVEREXPOSURE: N/A SKIN AND EYES: N/A. INHALATION: N/A. CARCINOGENICITY: NTP: No; IARC Monographs: No; OSHA Regulated: No. MEDICAL CONDITIONS GENERALLY AGGRAVATED BY EXPOSURE: N/K. FIRST AID PROCEDURES: N/A SKIN AND EYES: N/A. INHALATION: N/A. INGESTION: N/A.

IX. REACTIVITY DATA

STABILITY: N/A. INCOMPATIBILITY: N/A. HAZARDOUS DECOMPOSITION PRODUCTS: N/A. HAZARDOUS POLYMERIZATION: N/A.

X. SPILL OR LEAK PROCEDURES

STEPS TO BE TAKEN IF MATERIAL IS RELEASED OR SPILLED: N/A. WASTE DISPOSAL METHOD: Dispose of in accordance with Federal, State, and Local Waste Disposal Regulations.

XI. SPECIAL HANDLING AND USE INFORMATION

VENTILATION: N/A. RESPIRATORY PROTECTION: N/A. SKIN AND EYE PROTECTION: N/A.

XII. SPECIAL PRECAUTIONS

PRECAUTIONS TO BE TAKEN IN HANDLING AND STORAGE: N/A. OTHER PRECAUTIONS: N/A.

XIII. WARNING

FOR PREVIOUSLY INSTALLED FLOOR COVERING

DO NOT SAND, DRY SCRAPE, BEADBLAST, OR MECHANICALLY PULVERIZE EXISTING RESILIENT FLOORING, BACKING OR LINING FELT. THESE PRODUCTS MAY CONTAIN EITHER ASBESTOS FIBERS OR CRYSTALLINE SILICA. POSSIBLE CANCER AND RESPIRATORY TRACT HAZARD BY INHALATION. AVOID CREATING DUST. SMOKING BY INDIVIDUALS WHO HAVE BEEN EXPOSED TO ASBESTOS FIBERS GREATLY INCREASES THE RISK OF SERIOUS BODILY HARM. RFCI'S (Resilient Floor Covering Institute) RECOMMENDED WORK PRACTICES FOR REMOVAL OF RESILIENT FLOOR COVERINGS ARE A DEFINED SET OF INSTRUCTIONS ADDRESSED TO THE TASK OF REMOVING ALL RESILIENT FLOOR COVERING STRUCTURES.

XIV. NOTICE

Various government agencies have regulations governing the removal of inplace asbestos-containing materials. If you contemplate the removal of a resilient floor covering structure that contains (or is assumed to contain) asbestos, you should determine whether such regulations apply.

The information presented herein is supplied as a guide to those who handle or use this product. Safe work practices must be employed when working with any materials. It is important that the end user makes a determination regarding the adequacy of the safety procedures employed during the use of this product.

N/A – not applicable or not available
N/K – none known or not known

Benjamin Moore®
Paints

Material Safety Data Sheet

Revision Date: *14-Dec-2010* **Revision Number:** *2*

1. PRODUCT AND COMPANY IDENTIFICATION

Product Name **BEN, INTERIOR ACRYLIC LATEX SEMI-GLOSS**
Product Code **W627**
Product Class WATER THINNED PAINT
Color All

Manufacturer
Benjamin Moore & Co.
101 Paragon Drive
Montvale, NJ 07645
Phone: 201-573-9600
www.benjaminmoore.com

Emergency Telephone Number(s)
CHEMTREC: 800-424-9300

2. COMPOSITION INFORMATION ON COMPONENTS

Hazardous Components

Chemical Name	CAS-No	Weight % (max)
Titanium dioxide	13463-67-7	25
Kaolin	1332-58-7	10
Silica, amorphous	7631-86-9	5
Acetic acid ethenyl ester	108-05-4	0.5

3. HAZARDS IDENTIFICATION

Emergency Overview

Vapors may be irritating to eyes, nose, throat, and lungs. May cause skin irritation and/or dermatitis.

Appearance liquid **Odor** little or no odor

Potential Health Effects

Principal Routes of Exposure Eye contact, skin contact and inhalation.

Acute Effects
Eyes May cause slight irritation.
Skin Substance may cause slight skin irritation.
Inhalation May cause irritation of respiratory tract.
Ingestion Ingestion may cause gastrointestinal irritation, nausea, vomiting and diarrhea.

Chronic Effects Repeated contact may cause allergic reactions in very susceptible persons.

See Section 11 for additional Toxicological information.

Aggravated Medical Conditions None known

HMIS **Health:** 1* **Flammability:** 0 **Reactivity:** 0 **PPE:** -

HMIS Legend
0 - Minimal Hazard
1 - Slight Hazard
2 - Moderate Hazard
3 - Serious Hazard
4 - Severe Hazard
* - Chronic Hazard
X - Consult your supervisor or S.O.P. for "Special" handling instructions.

Note: The PPE rating has intentionally been left blank. Choose appropriate PPE that will protect employees from the hazards the material will present under the actual normal conditions of use.

Caution: HMIS® ratings are based on a 0-4 rating scale, with 0 representing minimal hazards or risks, and 4 representing significant hazards or risks. Although HMIS® ratings are not required on MSDSs under 29 CFR 1910.1200, Benjamin Moore & Co., has choosen to provide them. HMIS® ratings are to be used only in conjunction with a fully implemented HMIS® program by workers who have received appropriate HMIS® training. HMIS® is a registered trade and service mark of the NPCA. HMIS® materials may be purchased exclusively from J. J. Keller (800) 327-6868.

4. FIRST AID MEASURES

General Advice No hazards which require special first aid measures.

Eye Contact Rinse thoroughly with plenty of water for at least 15 minutes and consult a physician.

Skin Contact Wash off immediately with soap and plenty of water removing all contaminated clothes and shoes.

Inhalation Move to fresh air. If symptoms persist, call a physician.

Ingestion Clean mouth with water and afterwards drink plenty of water. Consult a physician if necessary.

Notes To Physician Treat symptomatically

5. FIRE-FIGHTING MEASURES

Suitable Extinguishing Media Use extinguishing measures that are appropriate to local circumstances and the surrounding environment.

Protective Equipment And Precautions For Firefighters As in any fire, wear self-contained breathing apparatus pressure-demand, MSHA/NIOSH (approved or equivalent) and full protective gear.

Specific Hazards Arising From The Chemical Closed containers may rupture if exposed to fire or extreme heat.

Sensitivity To Mechanical Impact	No
Sensitivity To Static Discharge	No
Flash Point Data	
Flash Point (°F)	Not applicable
Flash Point (°C)	Not applicable
Flash Point Method	Not applicable
Flammability Limits In Air	
Lower Explosion Limit	Not applicable
Upper Explosion Limit	Not applicable

NFPA **Health:** 1 **Flammability:** 0 **Instability:** 0 **Special:** Not Applicable

NFPA Legend
0 - Not Hazardous
1 - Slightly
2 - Moderate
3 - High
4 - Severe

The ratings assigned by Benjamin Moore & Co. are only suggested ratings, the contractor/employer has ultimate responsibilities for NFPA ratings where this system is used.

Additional information regarding the NFPA rating system is available from the National Fire Protection Agency (NFPA) at www.nfpa.org.

6. ACCIDENTAL RELEASE MEASURES

Personal Precautions	Avoid contact with skin, eyes and clothing. Ensure adequate ventilation.
Environmental Precautions	Prevent further leakage or spillage if safe to do so.
Methods For Clean-Up	Soak up with inert absorbent material. Sweep up and shovel into suitable containers for disposal.
Other Information	None known

7. HANDLING AND STORAGE

Handling	Avoid contact with skin, eyes and clothing. Avoid breathing vapors, spray mists or sanding dust. In case of insufficient ventilation, wear suitable respiratory equipment.
Storage	Keep container tightly closed. Keep out of the reach of children.

8. EXPOSURE CONTROLS / PERSONAL PROTECTION

Exposure Limits

Hazardous Components

Chemical Name	ACGIH	OSHA

Titanium dioxide	10 mg/m³ - TWA	15 mg/m³ - TWA total
Kaolin	2 mg/m³ - TWA	15 mg/m³ - TWA total 5 mg/m³ - TWA
Silica, amorphous	N/E	- (80)/(% SiO2) mg/m³ TWA 20 mppcf - TWA
Acetic acid ethenyl ester	10 ppm - TWA 15 ppm - STEL	N/E

Legend
ACGIH - American Conference of Governmental Industrial Hygienists Exposure Limits
OSHA - Occupational Safety & Health Administration Exposure Limits
N/E - Not Established

Engineering Measures Ensure adequate ventilation, especially in confined areas.

Personal Protective Equipment

Eye/Face Protection Safety glasses with side-shields.
Skin Protection Protective gloves and impervious clothing.
Respiratory Protection In case of insufficient ventilation wear suitable respiratory equipment.

Hygiene Measures Avoid contact with skin, eyes and clothing. Remove and wash contaminated clothing before re-use. Wash thoroughly after handling.

9. PHYSICAL AND CHEMICAL PROPERTIES

Appearance	liquid
Odor	little or no odor
Density (lbs/gal)	9.0 - 11.1
Specific Gravity	1.07 - 1.33
pH	Not available
Evaporation Rate	Not available
Vapor Pressure	Not available
Vapor Density	Not available
Wt. % Solids	35 - 60
Vol. % Solids	25 - 45
Wt. % Volatiles	40 - 65
Vol. % Volatiles	55 - 75
VOC Regulatory Limit (g/L)	< 50
Boiling Point (°F)	212
Boiling Point (°C)	100
Freezing Point (°F)	32
Freezing Point (°C)	0
Flash Point (°F)	Not applicable
Flash Point (°C)	Not applicable
Flash Point Method	Not applicable
Upper Explosion Limit	Not applicable
Lower Explosion Limit	Not applicable

10. STABILITY AND REACTIVITY

Chemical Stability Stable under normal conditions.

Conditions To Avoid	Prevent from freezing
Incompatible Materials	No materials to be especially mentioned.
Hazardous Decomposition Products	None under normal use.
Possibility Of Hazardous Reactions	None under normal conditions of use.

11. TOXICOLOGICAL INFORMATION

Acute Toxicity

Product
No information available

Component

Titanium dioxide
LD50 Oral: > 24000 mg/kg (Rat)
LD50 Dermal: > 10000 mg/m³ (Rabbit)
LC50 Inhalation (Dust): > 6.82 mg/L (Rat, 4 hr.)

Kaolin
LD50 Oral: > 5000 mg/kg (Rat)

Silica, amorphous
LD50 Oral: > 10000 mg/kg (Rat)
LD50 Dermal: 2,000 mg/kg (Rabbit)
LC50 Inhalation (Dust): > 2 mg/L

Acetic acid ethenyl ester
LD50 Oral: 2900 mg/kg (Rat)
LD50 Dermal: 2335 mg/kg (Rabbit)
LC50 Inhalation (Vapor): 114000 mg/m³ (Rat, 4 hr.)

Chronic Toxicity

Carcinogenicity
The information below indicates whether each agency has listed any ingredient as a carcinogen:

Chemical Name	ACGIH	IARC	NTP	OSHA Carcinogen
Titanium dioxide		2B - Possible Human Carcinogen		Listed
Acetic acid ethenyl ester	A3 - Confirmed Animal Carcinogen with Unknown Relevance to Humans	2B - Possible Human Carcinogen		Listed

- Although IARC has classified titanium dioxide as possibly carcinogenic to humans (2B), their summary concludes: "No significant exposure to titanium dioxide is thought to occur during the use of products in which titanium dioxide is bound to other materials, such as paint."

Legend
ACGIH - American Conference of Governmental Industrial Hygienists
IARC - International Agency for Research on Cancer
NTP - National Toxicity Program
OSHA - Occupational Safety & Health Administration

12. ECOLOGICAL INFORMATION

Ecotoxicity Effects

Product
Acute Toxicity to Fish
No information available

Acute Toxicity to Aquatic Invertebrates
No information available

Acute Toxicity to Aquatic Plants
No information available

Component
Acute Toxicity to Fish

Titanium dioxide
LC50: >1000 mg/L (Fathead Minnow - 96 hr.)

Acute Toxicity to Aquatic Invertebrates
No information available

Acute Toxicity to Aquatic Plants
No information available

13. DISPOSAL CONSIDERATIONS

Waste Disposal Method Dispose of in accordance with federal, state, and local regulations. Dry, empty containers may be recycled in a can recycling program. Local requirements may vary, consult your sanitation department or state-designated environmental protection agency for more disposal options.

14. TRANSPORT INFORMATION

DOT Not regulated

14. TRANSPORT INFORMATION

ICAO / IATA	Not regulated
IMDG / IMO	Not regulated

15. REGULATORY INFORMATION

International Inventories

United States TSCA	Yes - All components are listed or exempt.
Canada DSL	Yes - All components are listed or exempt.

Federal Regulations

SARA 311/312 hazardous categorization

Acute Health Hazard	No
Chronic Health Hazard	Yes
Fire Hazard	No
Sudden Release of Pressure Hazard	No
Reactive Hazard	No

SARA 313

Section 313 of Title III of the Superfund Amendments and Reauthorization Act of 1986 (SARA). This product contains a chemical or chemicals which are subject to the reporting requirements of the Act and Title 40 of the Code of Federal Regulations, Part 372:

Chemical Name	CAS-No	Weight % (max)
Acetic acid ethenyl ester	108-05-4	0.5

This product may contain trace amounts of (other) SARA reportable chemicals. Contact Benjamin Moore & Co. for further information.

Clean Air Act, Section 112 Hazardous Air Pollutants (HAPs) (see 40 CFR 61)

This product contains the following HAPs:

Chemical Name	CAS-No	Weight % (max)
Acetic acid ethenyl ester	108-05-4	0.5

This product may contain trace amounts of (other) HAPs chemicals. Contact Benjamin Moore & Co. for further information.

State Regulations

California Proposition 65

This product may contain small amounts of materials known to the state of California to cause cancer or reproductive harm.

State Right-to-Know

Chemical Name	Massachusetts	New Jersey	Pennsylvania	Louisiana	Rhode Island
Titanium dioxide	X	X	X		X
Kaolin	X	X	X		X
Silica, amorphous	X	X	X		
Acetic acid ethenyl ester	X	X	X	X	X

Legend
X - Listed

16. OTHER INFORMATION

WARNING! If you scrape, sand, or remove old paint, you may release lead dust. LEAD IS TOXIC. EXPOSURE TO LEAD DUST CAN CAUSE SERIOUS ILLNESS, SUCH AS BRAIN DAMAGE, ESPECIALLY IN CHILDREN. PREGNANT WOMEN SHOULD ALSO AVOID EXPOSURE. Wear a NIOSH approved respirator to control lead exposure. Clean up carefully with a HEPA vacuum and a wet mop. Before you start, find out how to protect yourself and your family by contacting the National Lead Information Hotline at 1-800-424-LEAD or log on to www.epa.gov/lead.

Prepared By

Product Stewardship Department
Benjamin Moore & Co.
360 Route 206 - P.O. Box 4000
Flanders, NJ 07836
866-690-1961

Revision Date: 14-Dec-2010
Revision Summary Not available

Disclaimer

The information contained herein is presented in good faith and believed to be accurate as of the effective date shown above. This information is furnished without warranty of any kind. Employers should use this information only as a supplement to other information gathered by them and must make independent determination of suitability and completeness of information from all sources to assure proper use of these materials and the safety and health of employees. Any use of this data and information must be determined by the user to be in accordance with applicable federal, provincial, and local laws and regulations.

End of MSDS

Benjamin Moore®
Paints

Material Safety Data Sheet

Revision Date: *25-Jan-2011* **Revision Number:** *4*

1. PRODUCT AND COMPANY IDENTIFICATION

Product Name **ben PREMIUM INTERIOR LATEX PRIMER**
Product Code **W624**
Product Class WATER THINNED PAINT
Color All

Manufacturer
Benjamin Moore & Co.
101 Paragon Drive
Montvale, NJ 07645
Phone: 201-573-9600
www.benjaminmoore.com

Emergency Telephone Number(s)
CHEMTREC: 800-424-9300

2. COMPOSITION INFORMATION ON COMPONENTS

Hazardous Components

Chemical Name	CAS-No	Weight % (max)
Nepheline syenite	37244-96-5	25
Titanium dioxide	13463-67-7	15

3. HAZARDS IDENTIFICATION

Emergency Overview

Vapors may be irritating to eyes, nose, throat, and lungs. May cause skin irritation and/or dermatitis.

Appearance liquid **Odor** little or no odor

Potential Health Effects

Principal Routes of Exposure Eye contact, skin contact and inhalation.

Acute Effects
Eyes May cause slight irritation.
Skin Substance may cause slight skin irritation.
Inhalation May cause irritation of respiratory tract.
Ingestion Ingestion may cause gastrointestinal irritation, nausea, vomiting and diarrhea.

Chronic Effects Repeated contact may cause allergic reactions in very susceptible persons.

See Section 11 for additional Toxicological information.

Aggravated Medical Conditions None known

HMIS **Health:** 1* **Flammability:** 0 **Reactivity:** 0 **PPE:** -

HMIS Legend
0 - Minimal Hazard
1 - Slight Hazard
2 - Moderate Hazard
3 - Serious Hazard
4 - Severe Hazard
* - Chronic Hazard
X - Consult your supervisor or S.O.P. for "Special" handling instructions.

Note: The PPE rating has intentionally been left blank. Choose appropriate PPE that will protect employees from the hazards the material will present under the actual normal conditions of use.

Caution: HMIS® ratings are based on a 0-4 rating scale, with 0 representing minimal hazards or risks, and 4 representing significant hazards or risks. Although HMIS® ratings are not required on MSDSs under 29 CFR 1910.1200, Benjamin Moore & Co., has choosen to provide them. HMIS® ratings are to be used only in conjunction with a fully implemented HMIS® program by workers who have received appropriate HMIS® training. HMIS® is a registered trade and service mark of the NPCA. HMIS® materials may be purchased exclusively from J. J. Keller (800) 327-6868.

4. FIRST AID MEASURES

General Advice	No hazards which require special first aid measures.
Eye Contact	Rinse thoroughly with plenty of water for at least 15 minutes and consult a physician.
Skin Contact	Wash off immediately with soap and plenty of water removing all contaminated clothes and shoes.
Inhalation	Move to fresh air. If symptoms persist, call a physician.
Ingestion	Clean mouth with water and afterwards drink plenty of water. Consult a physician if necessary.
Notes To Physician	Treat symptomatically

5. FIRE-FIGHTING MEASURES

Suitable Extinguishing Media	Use extinguishing measures that are appropriate to local circumstances and the surrounding environment.
Protective Equipment And Precautions For Firefighters	As in any fire, wear self-contained breathing apparatus pressure-demand, MSHA/NIOSH (approved or equivalent) and full protective gear.
Specific Hazards Arising From The Chemical	Closed containers may rupture if exposed to fire or extreme heat.
Sensitivity To Mechanical Impact	No